Section 2-000-000	Water System	UPDATED
Drawing Number	***Drawing Title***	
2-060-001	Fire Hydrant Installation	03.17.2011
2-070-001	Valve Box and Extension Detail	03.17.2011
2-070-002	Valve Marker Details	03.18.2011
2-070-003	2" Air and Vacuum Valve	03.18.2011
2-070-004	Cut-in Connections and Hot-Tapping	03.18.2011
~~2-080-001~~	~~Valve Box and Risers~~ ***Replaced by 2-07-001***	~~07.15.2008~~
2-080-002A	Sings in Landscape	03.18.2011
2-080-002B	Signs in Hardscape	03.18.2011
2-080-003	Pressure Reducing Station (Profile View)	03.07.2012
2-080-004	Pressure Reducing Station (Plan View)	03.07.2012
~~2-090-001A~~	~~Standard 5/8" – 1" Meter Services~~ **Replaced by 2-09-001**	~~01.14.2010~~
2-090-001	5/8 " – 1' Water Service Connection	04.07.2010
~~2-090-001B~~	~~Water Meter Assembly Parts List~~ **Replaced by 2-09-001**	~~04.24.2008~~
~~2-090-002A~~	~~5/8" – 1" Single Meter Service with PRV in Residence~~ **Replaced by 2-09-001**	~~02.02.2012~~
2-090-002B	5/8" – 1" Double Meter Service for all new Construction	10.14.2010
2-090-003A	ALTERNATE - 5/8" – 1" Single Meter Service with PRV in Meter Box	03.18.2011
2-090-003B	ALTERNATE - 5/8" – 1" Double Meter Service with PRV in Meter Box	10.14.2010
2-090-004	1 ½" and Larger Flange Style Meters	03.21.2011
~~2-090-004~~	~~Meter Service Note~~s ***Replaced by 2-09-001A***	04.24.2008
~~2-090-005~~	~~Meter Vault Assembly (Meters 2" and Larger)~~	~~05.10.2007~~
2-100-001	Pipe Casing	05.10.2007
2-110-001	Intentionally Left Vacant	10.15.2008
2-120-001	2" Blow Off Assembly	03.15.2010
2-130-001	Intentionally Left Vacant	05.10.2007
2-130-002	Thrust Block Table	05.10.2007
2-130-003	Intentionally Left Vacant	05.10.2007
2-153-001	Double Detector Check Valve	05.10.2007

Section 3-1-000	Roadway	
Drawing Number	***Drawing Title***	
3-01-001	Shoulder Type Roadway	05.10.2007
3-01-002	Vertical Curb Type Roadway	05.10.2007
3-01-003	Intentionally Left Vacant	05.10.2007
3-01-004	Gravel Surface Roadway	05.10.2007
3-01-005	Thickened Edge Roadway	05.10.2007
3-01-006	Extruded Curb Roadway	05.10.2007
3-01-007	Cul-de-Sacs	05.10.2007
3-01-008	Temporary Cul-de-Sac	05.10.2007
3-01-009	Eyebrow	05.10.2007
3-01-010	Half Street	05.10.2007
3-01-011	Alley Pavement Detail	05.10.2007
3-01-012	Inline Trench Dam	10.07.2010

Section 3-2-000	Drainage	
Drawing Number	***Drawing Title***	
3-02-001	Beveled End Pipe Section	05.10.2007
3-02-002	Field Tapping of Concrete Pipe	05.10.2007
3-02-003	Catch Basin Type I	05.10.2007
3-02-004	Catch Basin Type IL	05.10.2007

3-02-005	Catch Basin Type II - 48", 54", 72" & 96"	05.10.2007
3-02-006	Catch Basin Details	05.10.2007
3-02-007	Manhole Type II - 48", 54" & 60"	05.10.2007
3-02-008	Manhole Type II - 72" & 96"	05.10.2007
3-02-009	Manhole Type 3 - 48", 54", 60", 72" & 96"	05.10.2007
3-02-010	Manhole Type 4	05.10.2007
3-02-011	Manhole Details	05.10.2007
3-02-012	Curb Inlet	05.10.2007
3-02-013	Standard Grate	05.10.2007
3-02-014	Standard Frame with Vertical or Extruded Curb Installation	05.10.2007
3-02-015	Solid Cover	05.10.2007
3-02-016	Through-Curb Inlet Frame	05.10.2007
3-02-017	Through-Curb Inlet Frame and Grate with Vertical Curb Installation	05.10.2007
3-02-018	Vaned Grate	05.10.2007
3-02-019	Intentionally Left Vacant	05.10.2007
3-02-020	Intentionally Left Vacant	05.10.2007
3-02-021	Intentionally Left Vacant	05.10.2007
3-02-022	Locking Manhole Cover	05.10.2007
3-02-023	Locking Manhole Frame	05.10.2007
3-02-024	Rock-lined Shoulder Ditches & Curbed or Turnpike Shoulders	05.10.2007
3-02-025	Flow Restrictor / Oil Pollution Control Device, Tee Type (FROP-T)	05.10.2007
3-02-026	FROP-T Shear Gate Detail	05.10.2007
3-02-027	Flow Restrictor / Oil Pollution Control Device, Baffle Type (FROP-B)	05.10.2007
3-02-028	Individual Lot & Roof Drain	05.10.2007
3-02-029	Offset Corrugated Manhole	05.10.2007
3-02-030	Debris Cage	05.10.2007

Section 3-3-000 Curb & Driveway

Drawing Number	***Drawing Title***	
~~3-03-001~~	~~Curb and Sidewalk Joints~~ **Replaced by 3-03-005B**	~~05.10.2007~~
3-030-002A	Curb and Gutter Details & Dimensions	03.21.2011
3-030-002B	Extruded Curb Details & Dimensions	03.22.2011
3-03-003	Shoulder and Ditch Driveway Section	05.10.2007
3-03-004A	Standard Driveway with Planter Strip	03.22.2011
3-03-004B	Standard Driveway without Planter Strip	03.22.2011
3-03-005	Reverse Slope Driveway with Planter Strip	03.22.2011
3-03-005B	Curb, Sidewalk and Expansion Joint Details	03.22.2011
3-03-006	Driveway Placement and Setbacks	03.03.2011
3-03-007	Joint Use Driveway Tract	05.10.2007

Section 3-4-000 Sidewalks & Curb Ramps

Drawing Number	***Drawing Title***	
3-04-001	Curb Ramp Locations	05.10.2007
3-04-002	Type I Commercial 8' or Greater Sidewalk Widths	03.23.2011
3-04-003	Type II Curb Ramps – for use without landscape strip	03.24.2011
3-04-004	Type III Curb Ramps – for use with landscape strip	03.24.2011
3-04-005	Sidewalk End Ramp & landscape Strip Closure	03.24.2011

Section 3-5-000 Roadside Appurtenances

Drawing Number	***Drawing Title***	
3-05-001	Clearance of Roadside Obstacles on Shoulder Type Road	05.10.2007
3-05-002	Intersection Landing Profile	05.10.2007

3-05-003	Barricades	05.10.2007
3-05-004	Rock Facing, Cut Section	05.10.2007
3-05-005	Rock Facing, Fill Section	05.10.2007
3-05-006	Rock Facing, Under Sidewalk	05.10.2007
3-05-007	Rock Facing, Fill Section Reinforcement	05.10.2007
3-05-008	Concrete Steps and Metal Handrail	05.10.2007
3-05-009	Street Tree Standards	05.10.2007
3-05-010	Mailbox Mounting, Curb Type Location	05.10.2007
3-05-011	Mailbox Mounting, Shoulder Type Location	05.10.2007
3-05-012	Neighborhood Delivery & Collection Box Unit (N.D.C.B.U.) Mailbox Installation	6.29.2012
3-05-013	Removable Bollards	03.25.2011
3-05-014	Roadway Survey Monument with Case and Cover	05.10.2007
3-05-015	Off-Roadway Survey Monument	05.10.2007

Section 5-1-000 Sanitary Sewer System

Drawing Number	***Drawing Title***	
5-01-001	Ductile Iron Non-Locking Cover	05.10.2007
5-01-002	Intentionally Left Vacant	05.10.2007
5-01-003	Typical Side Sewer	05.10.2007
5-01-004	Typical Trench Section Ductile Iron Sewer Pipe	05.10.2007
5-01-005	Side Sewer Elevation and Plan	05.10.2007
5-01-006	Ladder Detail	05.10.2007
5-01-007	Pipe Bedding, Trench Section & Asphalt Patching	01.25.2010
5-01-008	Intentionally Left Vacant	05.10.2007
5-01-009	Intentionally Left Vacant	05.10.2007
5-01-010	Type I Manhole Detail Thru Flow	05.10.2007
5-01-011	Type I Manhole Details Channel and Shelf	05.10.2007
5-01-012	Intentionally Left Vacant	05.10.2007
5-01-013	Type 3 Manhole Detail	05.10.2007
5-01-014	Manhole Detail Gravity Main Flow	05.10.2007
5-01-015	Manhole Plan	05.10.2007
5-01-016	Side Sewer Service Marker	05.10.2007
5-01-017	Manhole Frame Collar	05.10.2007
5-120-001	Emergency Bypass Connection (Pump Station)	05.10.2007
5-140-001	Inside Drop Connection for Sanitary Sewers	05.10.2007
5-140-002	Outside Drop Connection for Sanitary Sewer	05.10.2007
5-145-001	8" Clean-Out	05.10.2007

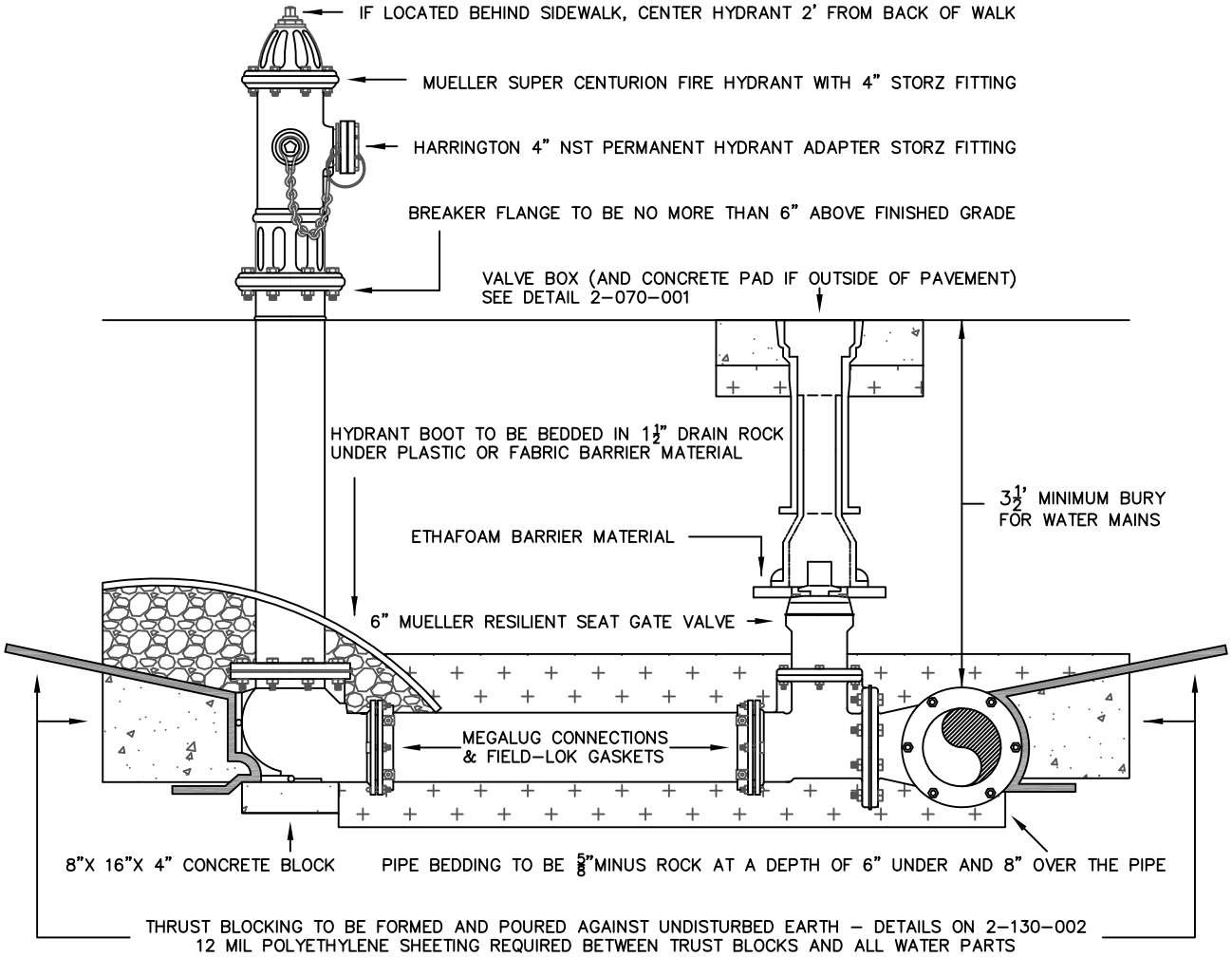

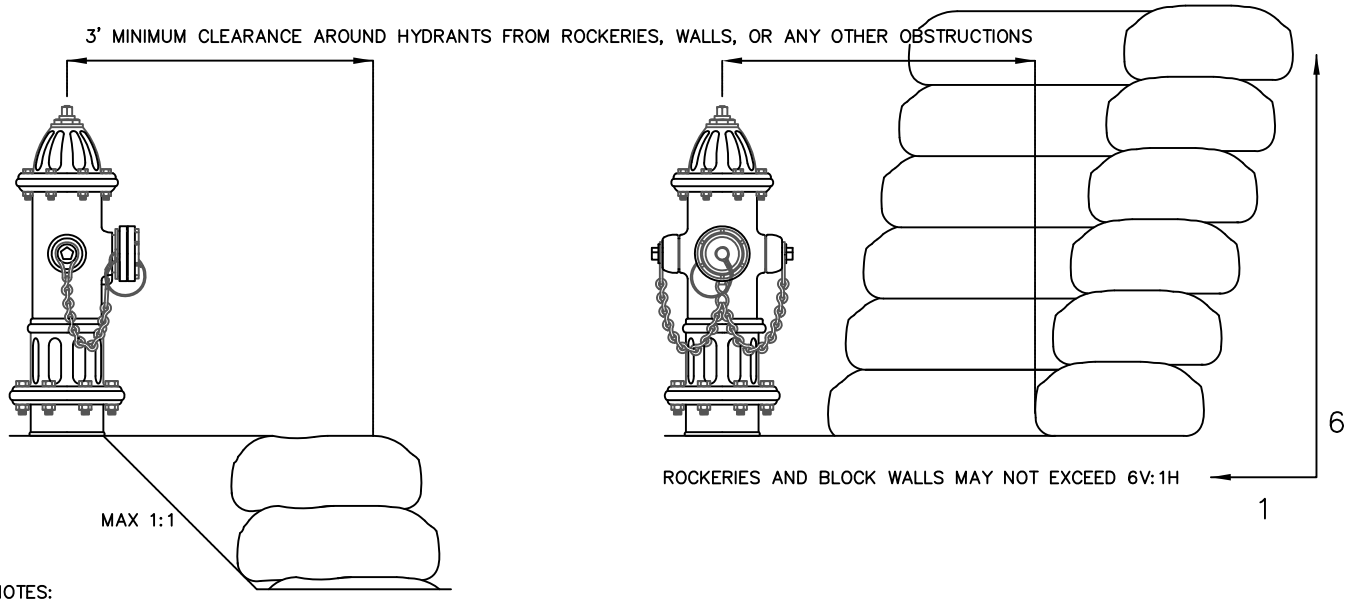

NOTES:

PAINT HYDRANT WITH TWO COATS OF QUICK-SET ENAMEL YELLOW HYDRANT PAINT, FAR WEST PAINT COMPANY # 403472.

STENCIL DISTANCE FROM THE VALVE TO THE MARKER (TO THE NEAREST FOOT) IN 2" BLACK NUMBERS DIRECTLY INLINE WITH THE FOOT VALVE.

WHEN HYDRANT IS LOCATED BEHIND A DITCH, INSTALL A CULVERT FOR ACCESS TO HYDRANT. SEE INSPECTOR FOR SIZE AND MATERIALS.

PLACE BLUE RETRO-REFLECTIVE TURTLE IN THE CENTER OF ROADWAY ADJACENT TO FIRE HYDRANT.

DUVALL DESIGN STANDARDS: 2007

REVISION	BY	DATE
	DLC	03-17-11

City of Duvall

FIRE HYDRANT INSTALLATION

DRAWING NUMBER 0-06-001

F:\Public Works\Development Guidelines\DDS Manual\2009 Update\Details\DWG\2-06-001 Fire Hydrants DC. dwg]

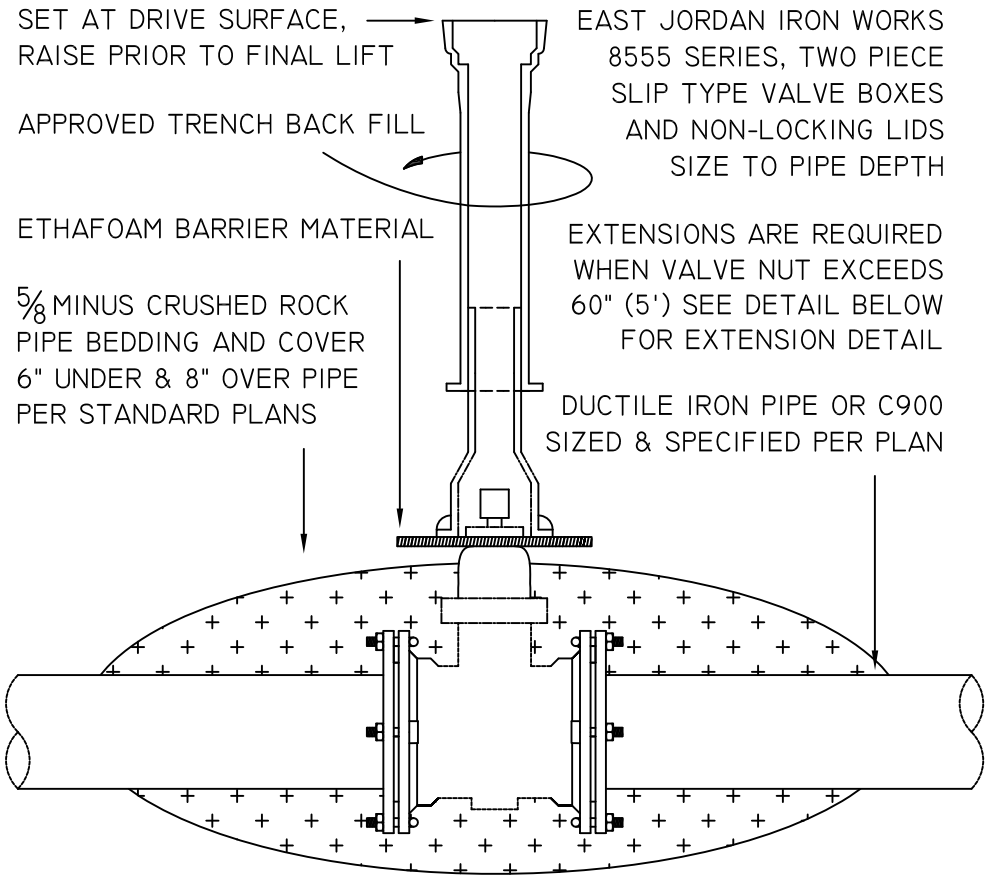

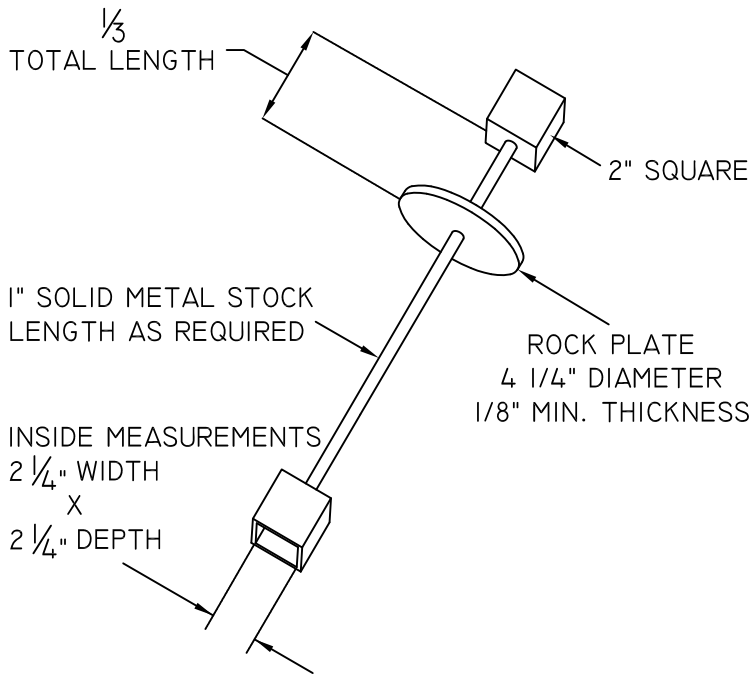

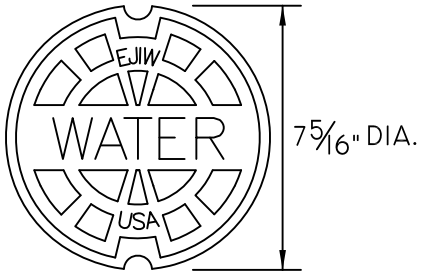

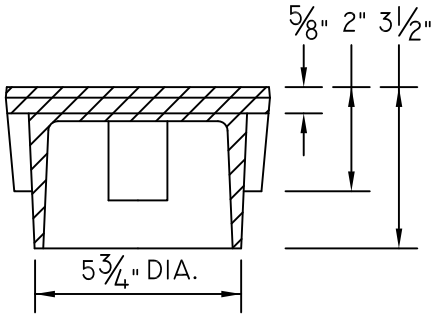

NOTES:
ALL EXTENSIONS ARE TO BE MADE OF STEEL. SIZE TO ALLOW VALVE OPERATION WITHIN 60" (5') OF SURFACE.
EXTENSIONS ARE TO BE A MINIMUM OF 12" LONG. ONLY ONE EXTENSION MAY BE USED PER VALVE ASSEMBLY.
PAINT ENTIRE ASSEMBLY WITH TWO COATS OF ATCO # 222 CARBON ELASTIC.

DUVALL DESIGN STANDARDS: 2007

REVISION	BY	DATE
	DLC	03-17-11

City of Duvall

VALVE BOX AND EXTENSION DETAIL

DRAWING NUMBER 0-07-001

F:\Public Works\Development Guidelines\DDS Manual\2009 Update\Details\DWG\2-07-001 Valve Box DC. dwg]

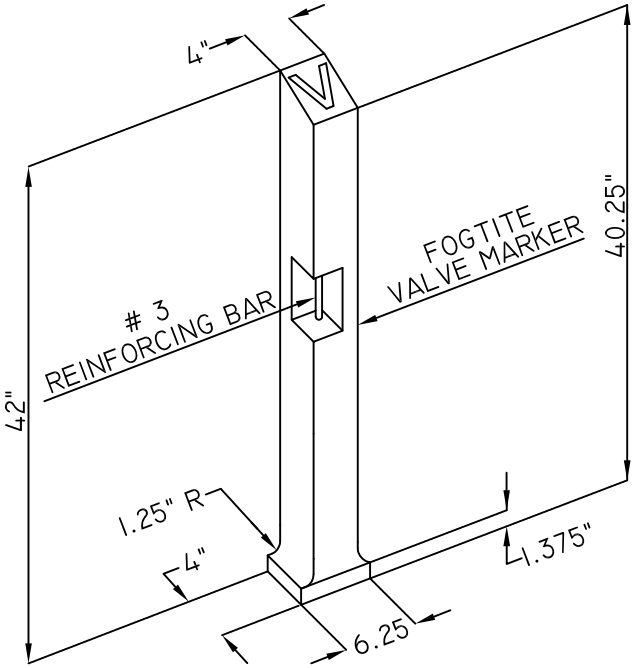

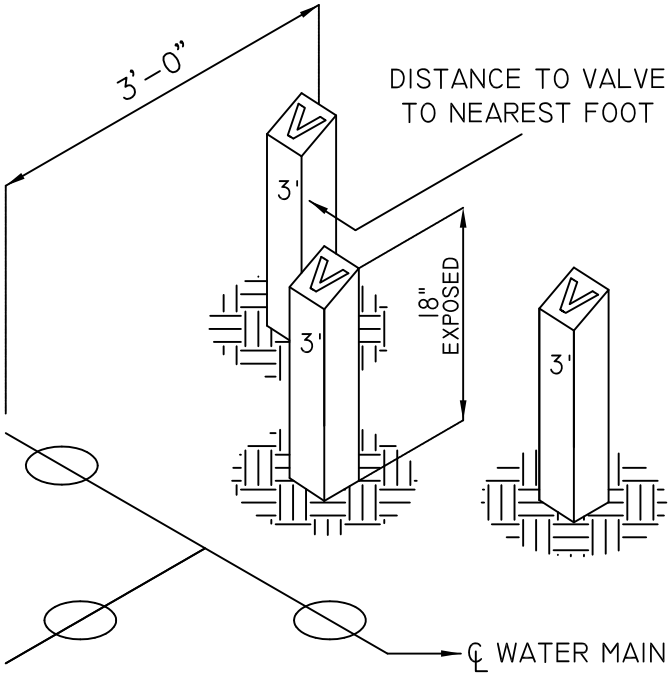

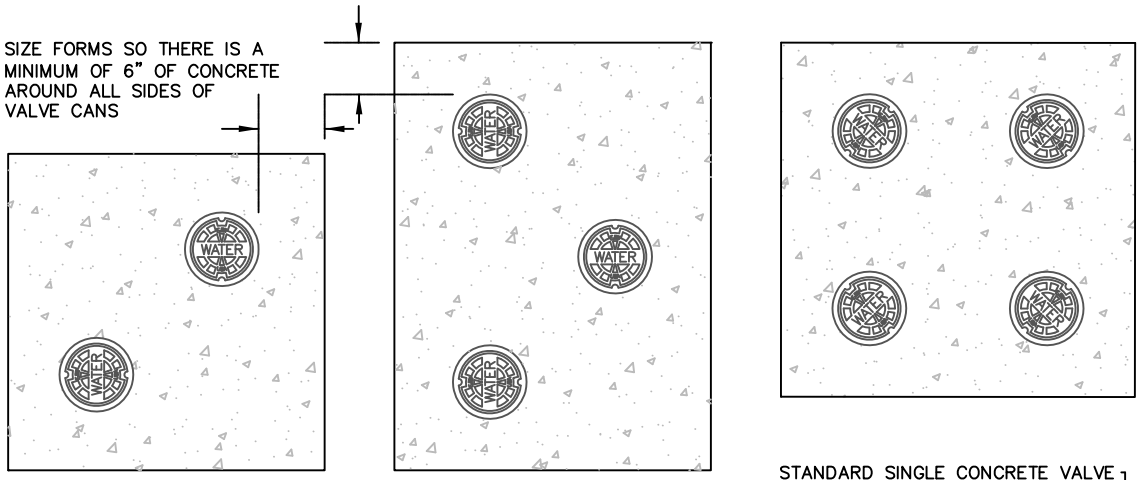

STANDARD SINGLE CONCRETE VALVE
CAN PAD TO BE 2'X2' MINIMUM

NOTES:

VALVE MARKER POSTS AND CONCRETE PADS AROUND VALVE CANS ARE REQUIRED ANYTIME VALVE CANS ARE LOCATED IN A NON-PAVED AREA.

VALVE MARKER POST SHALL BE FROM FOGTITE INC. USE ONE VALVE MARKER POST PER VALVE.

THE POST SHALL BE SET AT RIGHT ANGLES TO THE ROADWAY FROM THE VALVE AND SHALL BE SITUATED IN A SAFE AND REASONABLY CONSPICUOUS LOCATION.

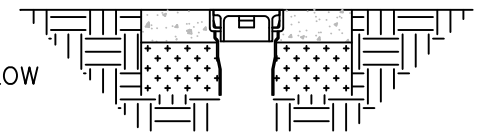

PAINT VALVE MARKERS WITH TWO COATS OF QUICKSET ENAMEL YELLOW HYDRANT PAINT, FAR WEST PAINT COMPANY # 403472.

STENCIL DISTANCE FROM THE VALVE TO THE MARKER (TO THE NEAREST FOOT) IN 2" BLACK NUMBERS.

VALVE CANS LOCATED IN NON-PAVED AREAS MUST HAVE A 2' X 2' CONCRETE PAD POURED AROUND THEM. FOR VALVE CLUSTERS FORM AS DETAILED ABOVE AND SIZE FORMS SO A MINIMUM OF 6" OF CONCRETE IS AROUND ALL VALVE CANS. NO EARTH FORMING ALLOWED. CONCRETE PAD TO BE 4" THICK OVER 6" OF COMPACTED $\frac{5}{8}$" MINUS CRUSHED ROCK.

VALVE CANS FOR BUTTERFLY VALVES TO BE LOCATED ON THE NORTH AND EAST SIDES OF THE MAIN.

DUVALL DESIGN STANDARDS: 2007

REVISION	BY	DATE
	DLC	03-18-11

City of Duvall

VALVE MARKER DETAIL

DRAWING NUMBER 2-07-002

F:\Public Works\Development Guidelines\DDS Manual\2009 Update\Details\DWG\2-07-002 Valve Markers DC.dwg]

PAINT STAND PIPE WITH TWO COATS OF QUICK SET ENAMEL YELLOW HYDRANT PAINT, FAR WEST PAINT COMPANY # 403472.
(SAME COLOR AS HYDRANTS AND VALVE MARKERS)

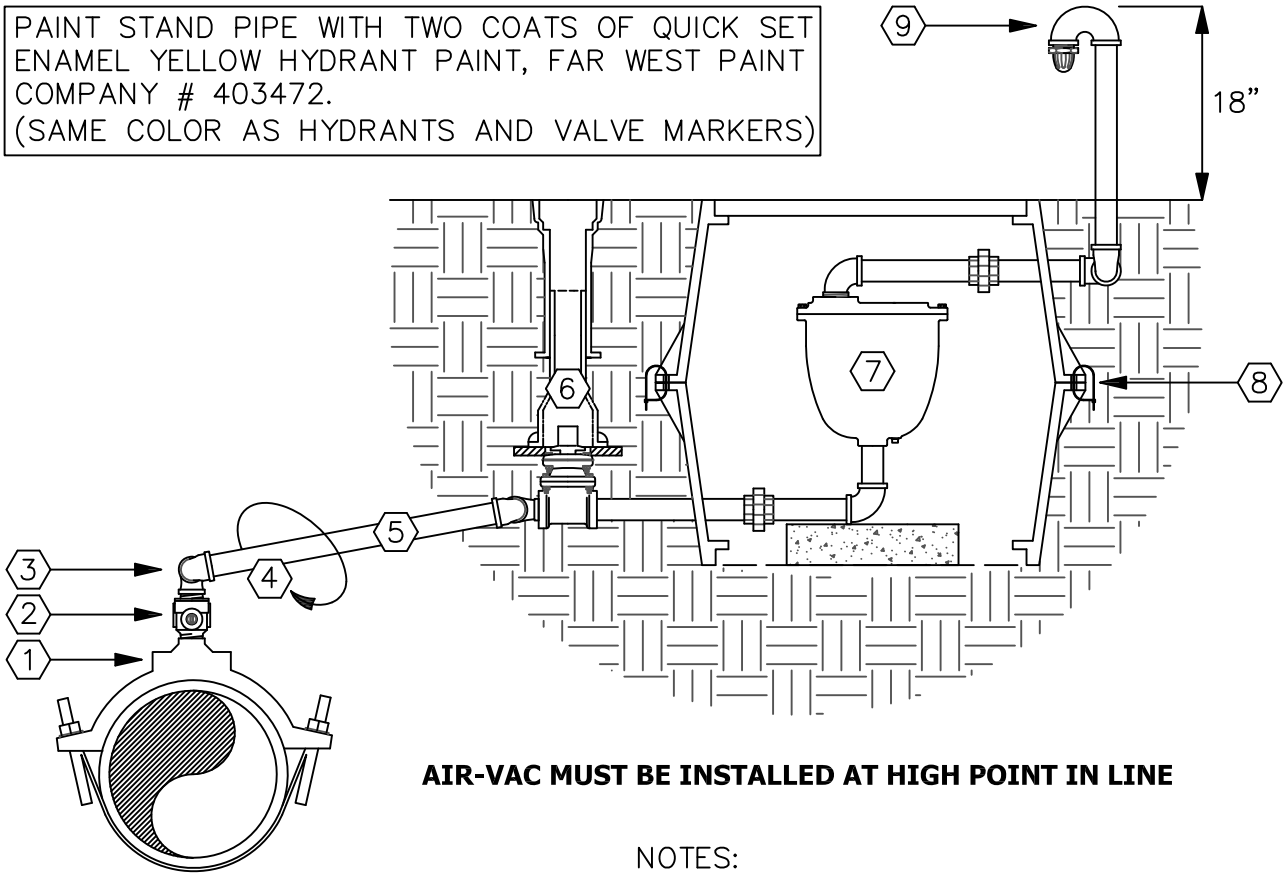

AIR-VAC MUST BE INSTALLED AT HIGH POINT IN LINE

NOTES:

1. SADDLE SHALL BE EITHER FORD FC202 OR ROMAC 202NS PLACED SO OUTLET IS UP
2. FORD FB400 OR MUELLER 300 BALLCORP VALVES (AWWA/CC TAPER THREAD INLET BY IRON PIPE THREAD OUTLET)
3. (1) DOUBLE FEMALE 90 & (1) STREET 90 TO CREATE A FULLY SWIVELING JOINT.
4. PIPE BED ZONE SHALL BE 3" OF SAND ALL AROUND PIPE
5. ALL PIPES & FITTING UNDER AIR-VAC VALVE SHALL BE 2" BRASS. EVERYTHING ABOVE MAY BE 2" GALVANIZED STEEL. AIR-VAC LINE SHALL HAVE A MINIMUM OF 2% SLOPE UPHILL TOWARD THE AIR-VAC VALVE TO ALLOW PURGING OF AIR.
6. 2" MUELLER RESILIENT WEDGE (N.R.S.) GATE VALVE WITH I.P.S. THREADED ENDS. PLACE GATE VALVE AS CLOSE TO BOX AS PRACTICAL. SEE DRAWING 2-070-001 FOR VALVE BOX DETAILS AND INFORMATION. NO CONCRETE PAD IS REQUIRED AROUND VALVE BOX IF IT IS PLACED NEXT TO BOX.
7. APCO 145C COMBINATION AIR VALVE (AIR-VAC). AIR-VAC IS CONNECTED IN LINE WITH A UNION AT EITHER SIDE AS SHOWN. USE A 2" STREET 90 DIRECTLY INTO TOP OF VALVE AND A DOUBLE FEMALE 90 BELOW. ADJUST HEIGHT WITH NIPPLE LENGTH BELOW VALVE. PLACE WEIGHT OF ASSEMBLY ON 8"X 16"X 4" CONCRETE BLOCK. INSULATE WITH FIBERGLASS INSULATION TO TOP OF AIR-VAC.
8. BOXES SHALL BE CARSON 1730 HDPE (SHOWN) FOR USE OUT OF THE TRAVEL LANE. USE NYLON ZIP-TIES TO CONNECT THE BOTTOM OF THE BOXES TOGETHER. FOR APPLICATIONS IN A PAVED AREA USE MID-STATES 1730-R HDPE TRAFFIC RATED BOXES WITH DUCTILE IRON LIDS. STACK TWO BOXES IN THE CONVENTIONAL MANNER. BOXES TO BE LOCATED IN LANDSCAPE STRIP UNLESS OTHERWISE APPROVED.
9. RETURN BEND WITH BEEHIVE STRAINER

DUVALL DESIGN STANDARDS: 2007			City of Duvall	2" AIR AND VACUUM VALVE
REVISION	BY	DATE		
	DLC	03-18-11		DRAWING NUMBER 2-07-003

F:\Public Works\Development Guidelines\DDS Manual\2009 Update\Details\DWG\2-07-003 AIR-VAC DC. dwg]

'HOT TAP'

MAY BE USED ANYTIME THE BRANCH SIZE IS SMALLER THAN THE MAIN SIZE
SAME SIZE TAPS MAY BE PERFORMED ON DUCTILE IRON PIPE ONLY

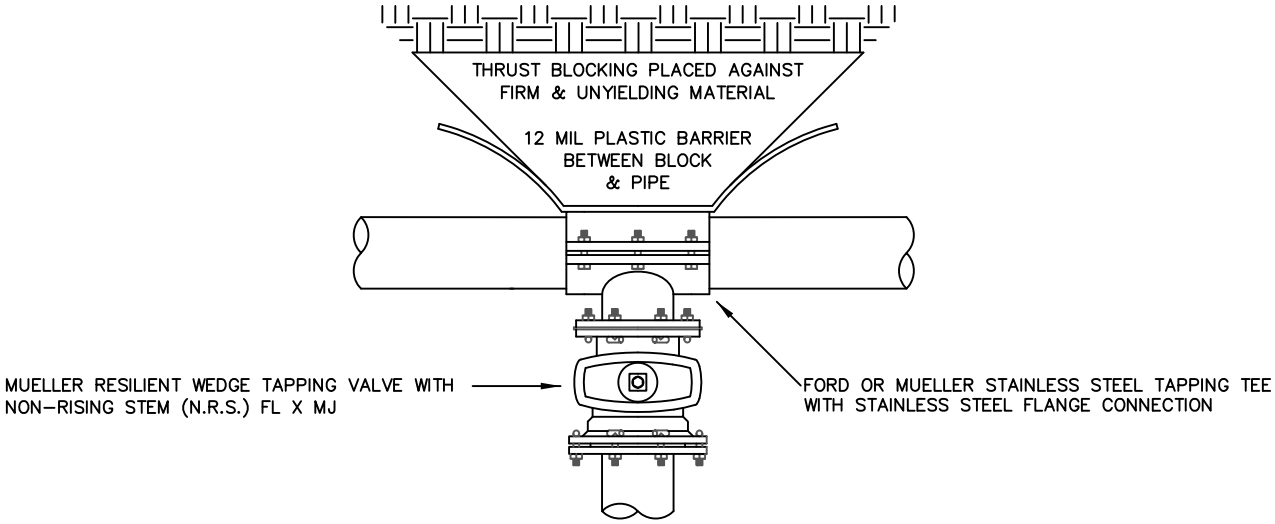

'CUT-IN'

MUST BE USED WHEN EXISTING WATER MAIN IS MADE FROM A/C, C-900, OR PVC PIPE
AND THE NEW BRANCH MUST BE THE SAME SIZE

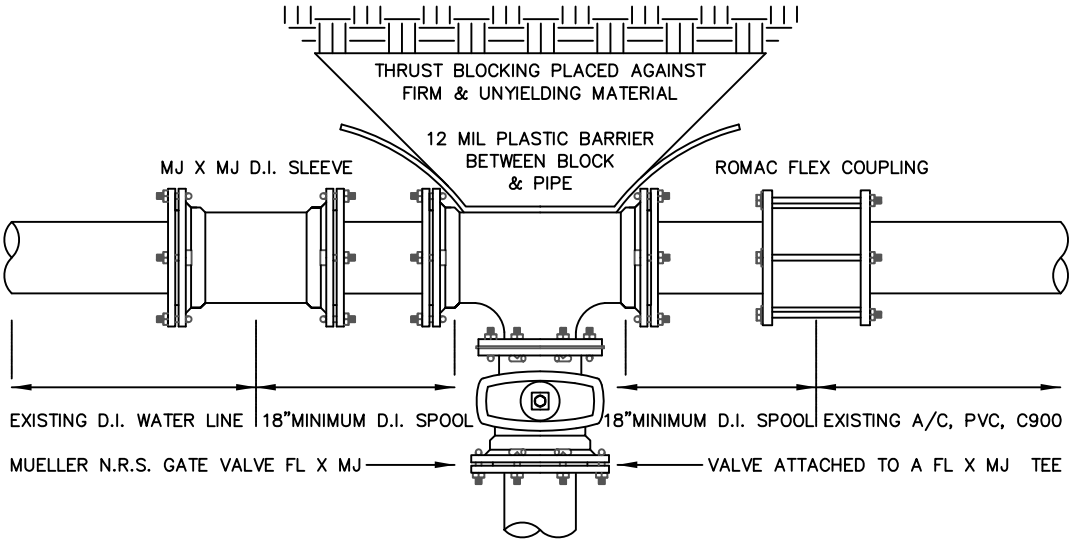

NOTES:

ALL CONNECTIONS TO BE MADE WITH THE CITY INSPECTOR PRESENT.

WHEN HOT TAPPING' SUPPORT WEIGHT OF VALVE BY PLACING A CONCRETE BLOCK UNDER THE VALVE BEFORE TIGHTENING THE TAPPING TEE.

CUT-IN'S REQUIRING WATER MAIN SHUTDOWN ARE REQUIRED TO HAVE A MINIMUM OF 3 DAYS NOTICE TO ALL EFFECTED CUSTOMERS IN WRITING AND APPROVED BY THE CITY OF DUVALL. TO BE CONSIDERED ONE FULL DAY SHUT OFF NOTICES MUST BE DELIVERED BEFORE 12:00 PM. DO NOT COUNT WEEKEND DAYS.

ALL PIPE AND FITTINGS TO BE SWABBED WITH A CL_2 SOLUTION OF AT LEAST 50 PPM.

CONTRACTOR MAY NOT OPERATE CITY WATER VALVES UNLESS GIVEN CONSENT BY THE CITY INSPECTOR OR DURING AN EMERGENCY.

DUVALL DESIGN STANDARDS: 2007

REVISION	BY	DATE
NEW FORMAT	DLC	03-18-11

City of Duvall

CUT-IN CONNECTIONS AND HOT-TAPPING OF WATER MAIN

DRAWING NUMBER 2-07-004

F:\Public Works\Development Guidelines\DDS Manual\2009 Update\Details\DWG\2-07-004 Water Main Connection DC. dwg]

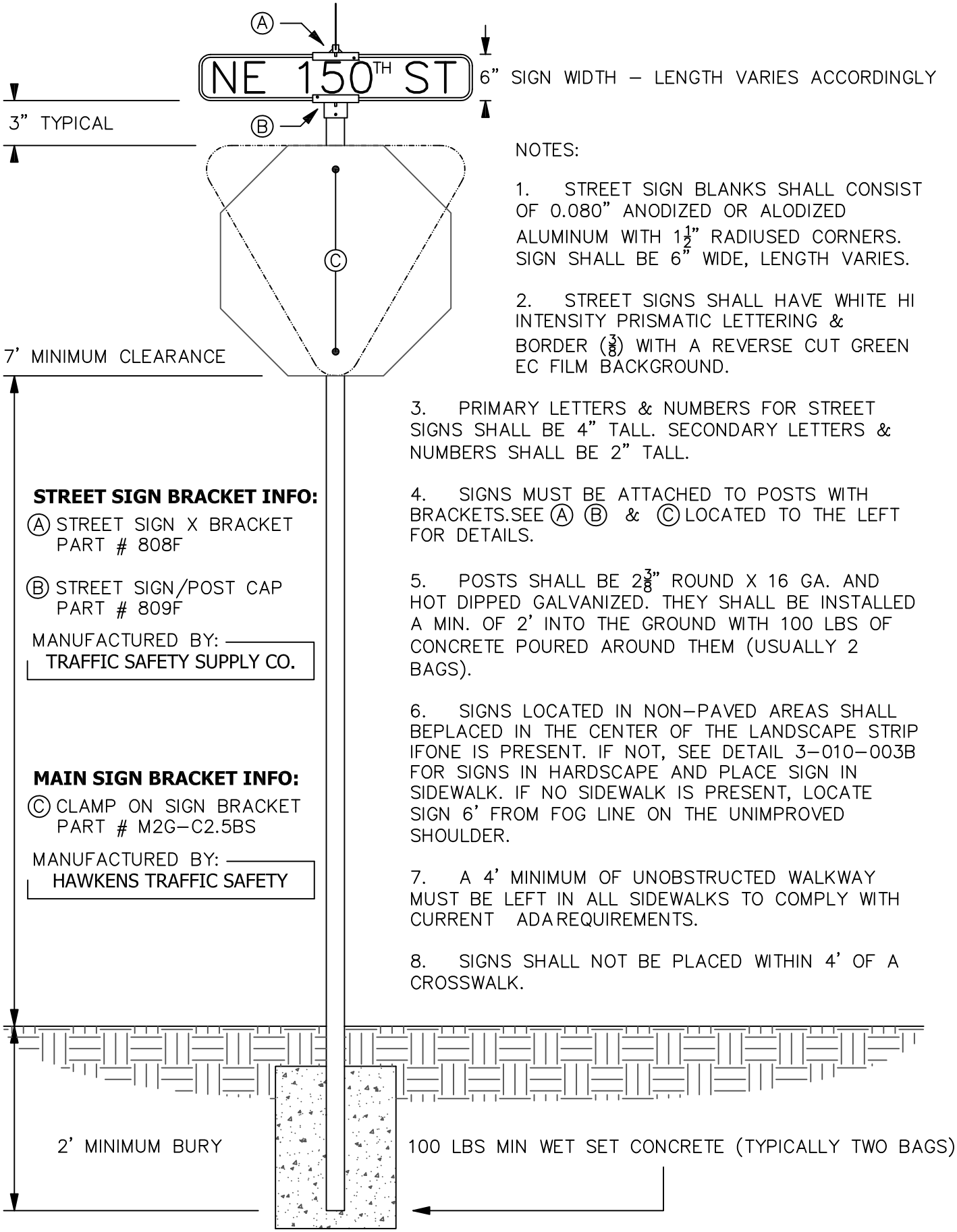

NOTES:

1. STREET SIGN BLANKS SHALL CONSIST OF 0.080" ANODIZED OR ALODIZED ALUMINUM WITH $1\frac{1}{2}$" RADIUSED CORNERS. SIGN SHALL BE 6" WIDE, LENGTH VARIES.

2. STREET SIGNS SHALL HAVE WHITE HI INTENSITY PRISMATIC LETTERING & BORDER ($\frac{3}{8}$) WITH A REVERSE CUT GREEN EC FILM BACKGROUND.

3. PRIMARY LETTERS & NUMBERS FOR STREET SIGNS SHALL BE 4" TALL. SECONDARY LETTERS & NUMBERS SHALL BE 2" TALL.

4. SIGNS MUST BE ATTACHED TO POSTS WITH BRACKETS.SEE Ⓐ Ⓑ & Ⓒ LOCATED TO THE LEFT FOR DETAILS.

5. POSTS SHALL BE $2\frac{3}{8}$" ROUND X 16 GA. AND HOT DIPPED GALVANIZED. THEY SHALL BE INSTALLED A MIN. OF 2' INTO THE GROUND WITH 100 LBS OF CONCRETE POURED AROUND THEM (USUALLY 2 BAGS).

6. SIGNS LOCATED IN NON–PAVED AREAS SHALL BEPLACED IN THE CENTER OF THE LANDSCAPE STRIP IFONE IS PRESENT. IF NOT, SEE DETAIL 3–010–003B FOR SIGNS IN HARDSCAPE AND PLACE SIGN IN SIDEWALK. IF NO SIDEWALK IS PRESENT, LOCATE SIGN 6' FROM FOG LINE ON THE UNIMPROVED SHOULDER.

7. A 4' MINIMUM OF UNOBSTRUCTED WALKWAY MUST BE LEFT IN ALL SIDEWALKS TO COMPLY WITH CURRENT ADA REQUIREMENTS.

8. SIGNS SHALL NOT BE PLACED WITHIN 4' OF A CROSSWALK.

STREET SIGN BRACKET INFO:

Ⓐ STREET SIGN X BRACKET
PART # 808F

Ⓑ STREET SIGN/POST CAP
PART # 809F

MANUFACTURED BY:
TRAFFIC SAFETY SUPPLY CO.

MAIN SIGN BRACKET INFO:

Ⓒ CLAMP ON SIGN BRACKET
PART # M2G–C2.5BS

MANUFACTURED BY:
HAWKENS TRAFFIC SAFETY

DUVALL DESIGN STANDARDS: 2007

REVISION	BY	DATE
NEW FORMAT	DLC	03-18-11

City of Duvall

SIGNS IN LANDSCAPE

DRAWING NUMBER 2-08-002A

F:\Public Works\Development Guidelines\DDS Manual\2009 Update\Details\DWG\2-08-002A Street Sign in Landscaping detail DC.dwg]

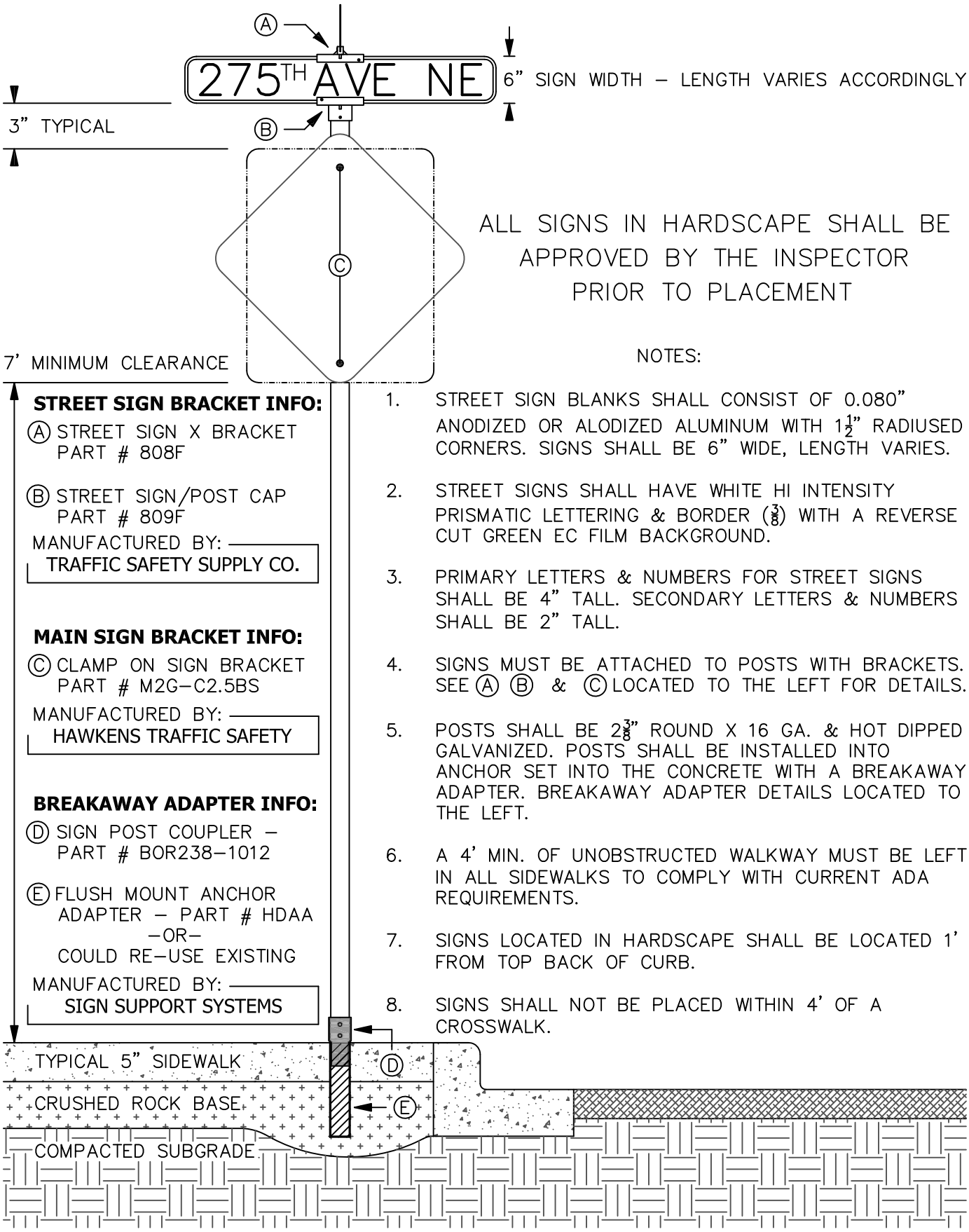

ALL SIGNS IN HARDSCAPE SHALL BE APPROVED BY THE INSPECTOR PRIOR TO PLACEMENT

STREET SIGN BRACKET INFO:

Ⓐ STREET SIGN X BRACKET
PART # 808F

Ⓑ STREET SIGN/POST CAP
PART # 809F

MANUFACTURED BY:
TRAFFIC SAFETY SUPPLY CO.

MAIN SIGN BRACKET INFO:

Ⓒ CLAMP ON SIGN BRACKET
PART # M2G–C2.5BS

MANUFACTURED BY:
HAWKENS TRAFFIC SAFETY

BREAKAWAY ADAPTER INFO:

Ⓓ SIGN POST COUPLER –
PART # BOR238–1012

Ⓔ FLUSH MOUNT ANCHOR
ADAPTER – PART # HDAA
–OR–
COULD RE–USE EXISTING

MANUFACTURED BY:
SIGN SUPPORT SYSTEMS

NOTES:

1. STREET SIGN BLANKS SHALL CONSIST OF 0.080" ANODIZED OR ALODIZED ALUMINUM WITH $1\frac{1}{2}$" RADIUSED CORNERS. SIGNS SHALL BE 6" WIDE, LENGTH VARIES.
2. STREET SIGNS SHALL HAVE WHITE HI INTENSITY PRISMATIC LETTERING & BORDER ($\frac{3}{8}$) WITH A REVERSE CUT GREEN EC FILM BACKGROUND.
3. PRIMARY LETTERS & NUMBERS FOR STREET SIGNS SHALL BE 4" TALL. SECONDARY LETTERS & NUMBERS SHALL BE 2" TALL.
4. SIGNS MUST BE ATTACHED TO POSTS WITH BRACKETS. SEE Ⓐ Ⓑ & Ⓒ LOCATED TO THE LEFT FOR DETAILS.
5. POSTS SHALL BE $2\frac{3}{8}$" ROUND X 16 GA. & HOT DIPPED GALVANIZED. POSTS SHALL BE INSTALLED INTO ANCHOR SET INTO THE CONCRETE WITH A BREAKAWAY ADAPTER. BREAKAWAY ADAPTER DETAILS LOCATED TO THE LEFT.
6. A 4' MIN. OF UNOBSTRUCTED WALKWAY MUST BE LEFT IN ALL SIDEWALKS TO COMPLY WITH CURRENT ADA REQUIREMENTS.
7. SIGNS LOCATED IN HARDSCAPE SHALL BE LOCATED 1' FROM TOP BACK OF CURB.
8. SIGNS SHALL NOT BE PLACED WITHIN 4' OF A CROSSWALK.

DUVALL DESIGN STANDARDS: 2007

REVISION	BY	DATE
NEW FORMAT	DLC	03-18-11

City of Duvall

SIGNS IN HARDSCAPE

DRAWING NUMBER 2–08–002B

F:\Public Works\Development Guidelines\DDS Manual\2009 Update\Details\DWG\2-08-002B Street Sign in hardscape Detail DC.dwg]

1. Aluminum double door access hatch shall provide a min of 4' x 5' opening and withstand H-20 loads. Hatch should have an assisted opening and be lockable.
2. Bilco 'Ladder Up' safety post or equivalent. Attach to side of ladder or rung.
3. Precast concrete utility vault with precast drainage sump. Size for min clearances.
4. 4 $\frac{1}{2}$" Pressure gauge with turret Case. (0-200 PSI). Attach to copper with brass tee.
5. Cla-Val pressure reducing valve (P.R.V.) # 90G-01 ABCSKC with level indicator.
6. Mueller Resilient Wedge (non-rising stem) gate valve with hand wheel operation.
7. Tapped Blind Flange, Brass Street 90, Brass Bushing(s), $\frac{1}{4}$" Brass ball valve.
8. Ductile Iron (D.I.) FL x FL Tee
9. Ductile Iron (D.I.) FL x FL Spool
10. Ductile Iron (D.I.) FL x MJ Coupler
11. $\frac{1}{4}$" Brass ball valve and copper line to gauge.
12. D.I. FL x FL wye strainer with 20 mesh screen.
13. D.I. FL x FL long sweep 90.
14. D.I. MJ x MJ 90 with restrained joints.
15. Mega-lug style follower placed against vault wall and encased in concrete for thrust protection.
16. D.I. pipe FL x PE. Size for 12" min between inside of vault wall and flange.
17. D.I. FL x FL wye strainer with $\frac{1}{8}$" dia. screen. (Larger screen size than 12)
18. 2" brass corporation stop. Ford FB400 or Mueller 300 Ballcorp valve.
19. Adjustable pipe support with saddle and anchor flange. Space as needed.
20. Polypropylene ladder. Sized to detail.
21. Precast sump for gravity drain (2% min) or venturi pump if not obtainable.
22. 6" min $\frac{5}{8}$ minus crushed rock mechanically compacted and placed over firm and unyielding subgrade. 1 $\frac{1}{4}$" minus crushed rock may be substituted.

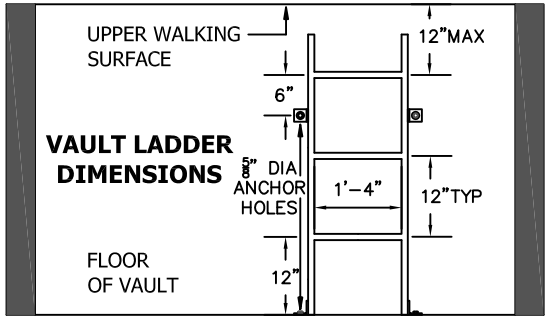

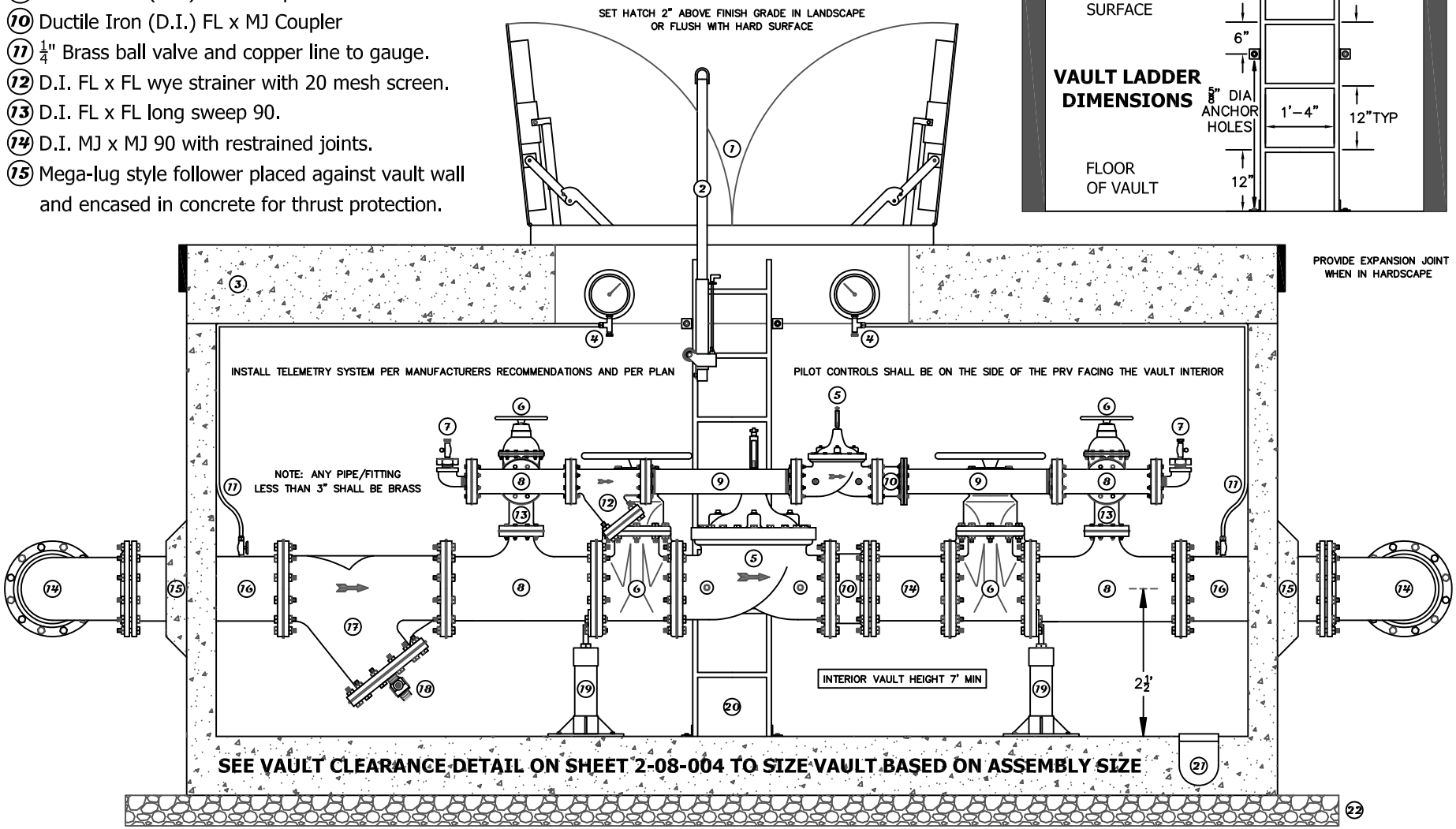

DUVALL DESIGN STANDARDS: 2007

REVISION	BY	DATE
NEW DETAIL	DLC	03-07-12

City of Duvall

PRESSURE REDUCING STATION
PROFILE VIEW

DRAWING NUMBER 2-80-003

F:\Public Works\Development Guidelines\DDS Manual\2009 Update\Details\DWG\2-08-003 Pressure Reducing Station (Plan View).DWG

1. **IN-GROUND VALVES SHALL ALSO BE MUELLER GV BUT WITH 2" SQUARE OPERATING NUTS.**
2. **ALL BENDS ON PRV LOOP MUST HAVE BOTH RESTRAINED JOINTS AND THRUST BLOCKING.**
3. **BYPASS VALVE SHALL BE PLACED ON THE UPSTREAM MAINLINE TEE. SIZE PIPE PER PLAN.**

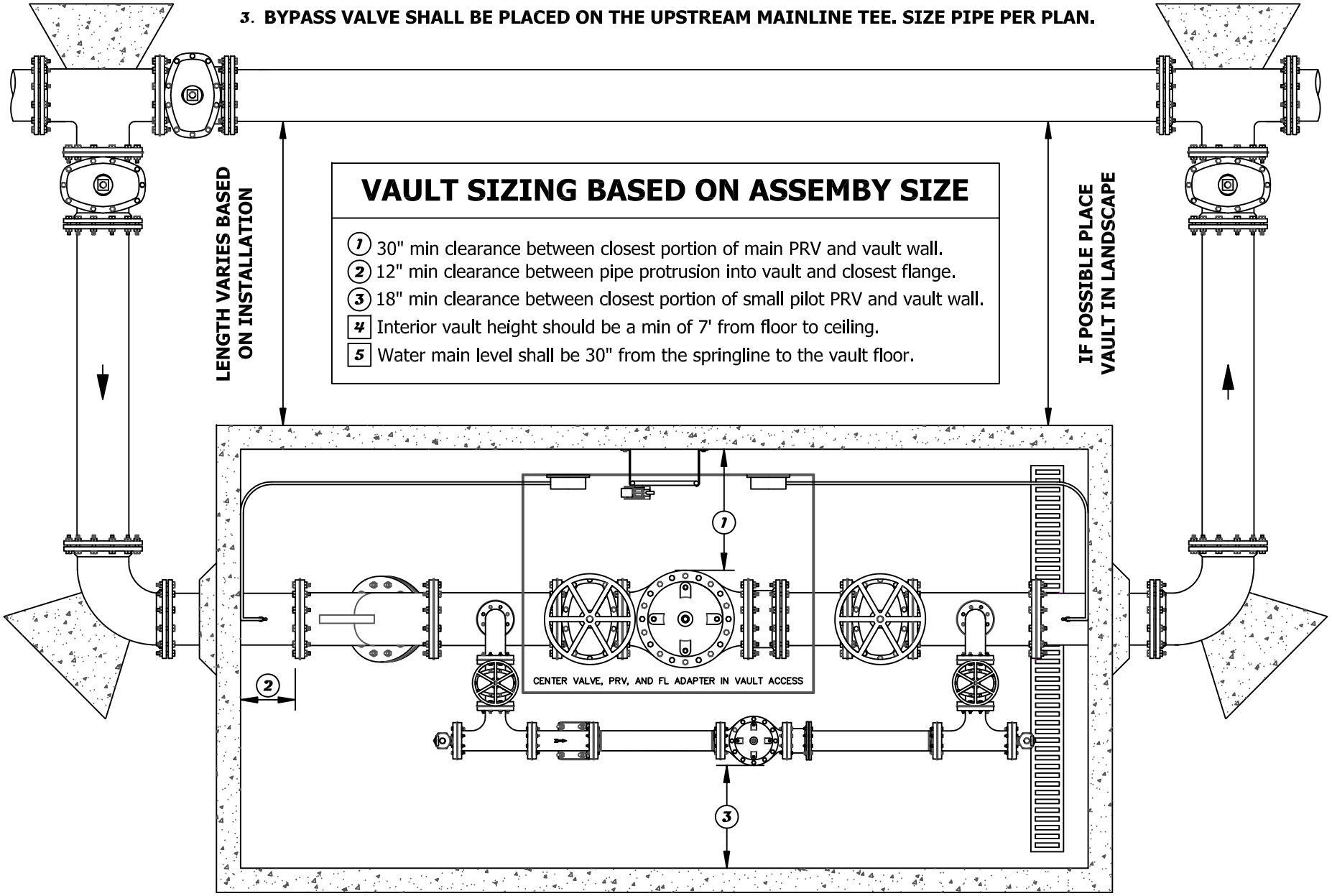

VAULT SIZING BASED ON ASSEMBY SIZE

1. 30" min clearance between closest portion of main PRV and vault wall.
2. 12" min clearance between pipe protrusion into vault and closest flange.
3. 18" min clearance between closest portion of small pilot PRV and vault wall.
4. Interior vault height should be a min of 7' from floor to ceiling.
5. Water main level shall be 30" from the springline to the vault floor.

DUVALL DESIGN STANDARDS: 2007

REVISION	BY	DATE
NEW DETAIL	DLC	03-07-12

City of Duvall

PRESSURE REDUCING STATION
PLAN VIEW

DRAWING NUMBER 2-80-004

-GENERAL PROFILE OF SERVICE CONNECTION-

REFER TO DRAWINGS 2-09-001B THROUGH 2-09-003B FOR METER ASSEMBLY DETAILS

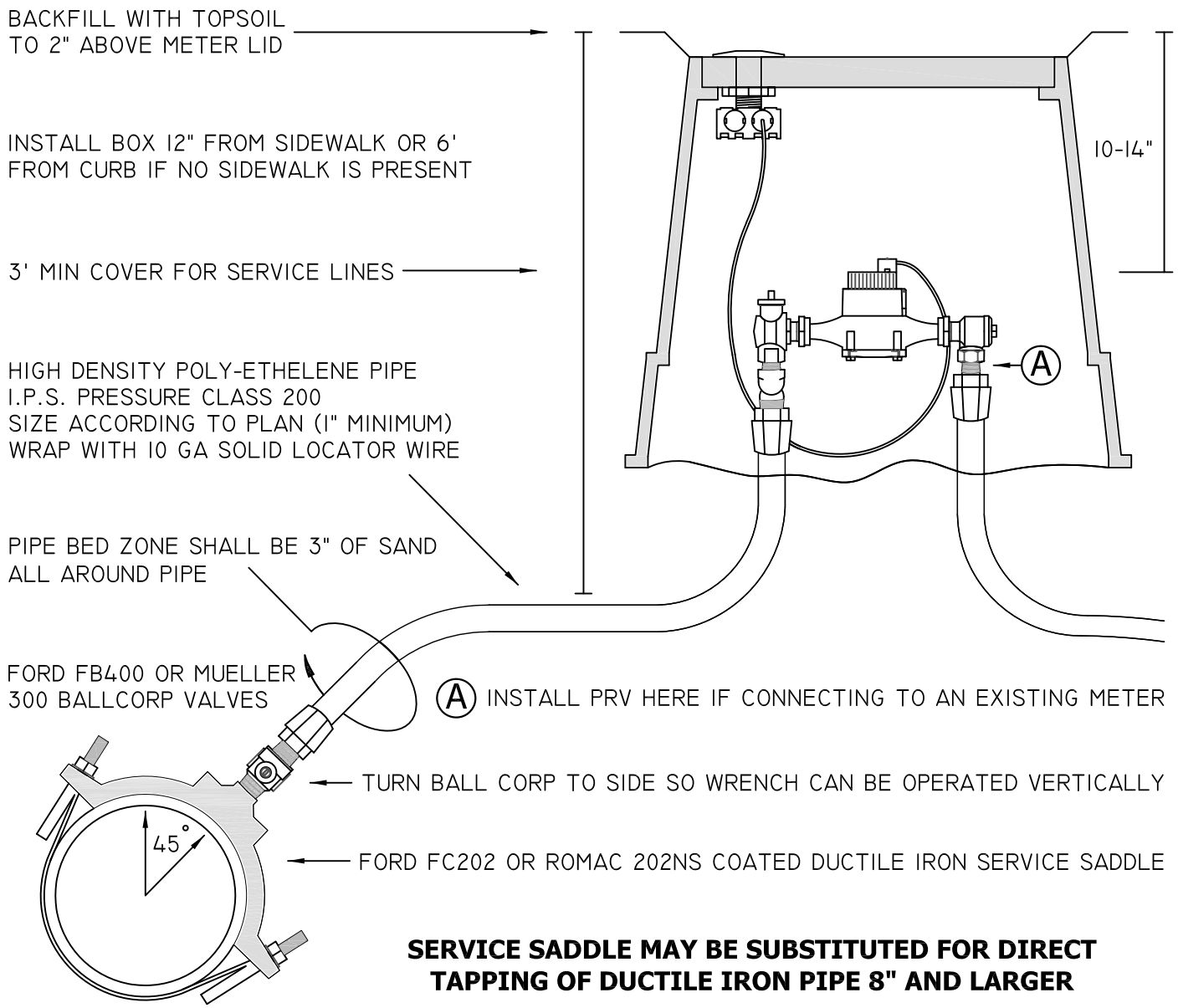

SERVICE SADDLE MAY BE SUBSTITUTED FOR DIRECT TAPPING OF DUCTILE IRON PIPE 8" AND LARGER

METER BOX INFORMATION

NON-TRAFFIC BEARING METER BOXES: BLACK BOX WITH FLUSH MOUNT LID AND READER
SINGLE: CARSON 1419-18 DOUBLE: CARSON 1730-18

TRAFFIC BEARING METER BOXES: BLACK BOX WITH DUCTILE IRON LID AND READER
SINGLE: CARSON MSBCF-1118-18XL DOUBLE: CARSON MSBCF-1730-18XL

IRRIGATION METER BOXES: GREEN BOX WITH GREEN SOLID T-COVER LID
SINGLE: CARSON 1419-18 DOUBLE: CARSON 1730-18

DO NOT ORDER METER LIDS WITH PRE-DRILLED TOUCH-TO-READ HOLE.
THE CITY WILL DRILL THE LIDS AT THE TIME OF METER INSTALLATION

DUVALL DESIGN STANDARDS: 2007

REVISION	BY	DATE
INCREASED METER DEPTH	DLC	04-07-10

City of Duvall

5/8" - 1" WATER SERVICE CONNECTION

DRAWING NUMBER 2-09-001

F:\Public Works\Development Guidelines\DDS Manual\2009 Update\Details\DWG\2-09-001 Water Service Profile DC.dwg

-DOUBLE METERS WITH PRVs LOCATED IN RESIDENCE-

TYPICALLY FOR ALL NEW CONSTRUCTION

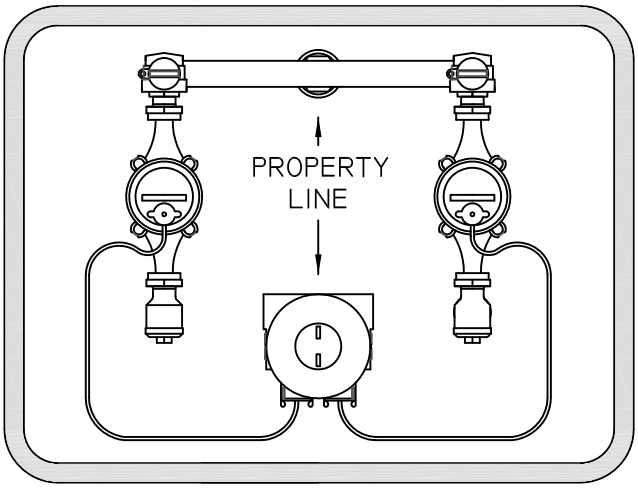

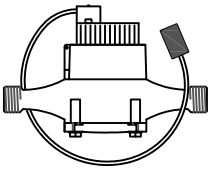

METER INSTALLED BY C.O.D. – $\frac{5}{8}$"X$\frac{3}{4}$" METER = 7$\frac{1}{2}$" FLANGE TO FLANGE, $\frac{3}{4}$"METER = 9" FLANGE TO FLANGE, 1" METER = 10$\frac{3}{4}$" FLANGE TO FLANGE.

FORD OR MUELLER ANGLE BALL METER VALVE (F.I.P. INLET/METER SWIVEL NUT OUTLET)

FORD OR MUELLER ANGLE CHECK VALVE (METER SWIVEL NUT INLET/F.I.P. OUTLET)

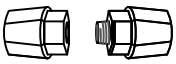

MUELLER INSTA–TITE (MALE OR FEMALE I.P. BY MODIFIED COMPRESSION)

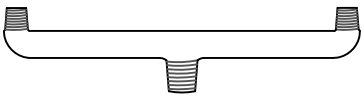

FORD OR MUELLER U–BRANCH WITH M.I.P. CONNECTIONS
OUTLET SPACING SHALL BE A MINIMUM OF 8"
$\frac{5}{8}$"x $\frac{3}{4}$" AND $\frac{3}{4}$" METERS USE: 1" INLET AND $\frac{3}{4}$" OUTLETS
1" METERS USE: 1$\frac{1}{2}$" INLET AND 1" OUTLETS

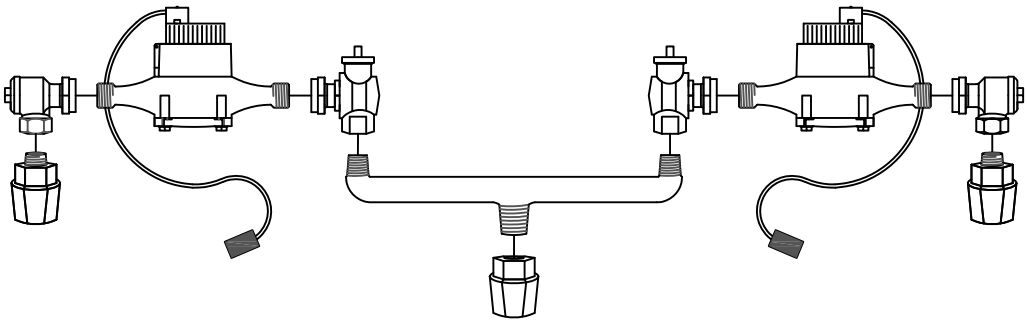

EXPLODED VIEW OF METER ASSEMBLY

DUVALL DESIGN STANDARDS: 2007

REVISION	BY	DATE
ADDED PART NUMBERS	DLC	10-14-10

City of Duvall

$\frac{5}{8}$"-1" DOUBLE METER SERVICE FOR ALL NEW CONSTRUCTION

DRAWING NUMBER 2-09-002B

F:\Public Works\Development Guidelines\DDS Manual\2009 Update\Details\DWG\2-09-002B Retro-Fit Double Meters DC.dwg

-SINGLE METERS WITH PRVs LOCATED IN METER BOX-

FOR RETROFITTING A NEW SERVICE TO AN EXISTING METER

EXPLODED VIEW OF METER ASSEMBLY

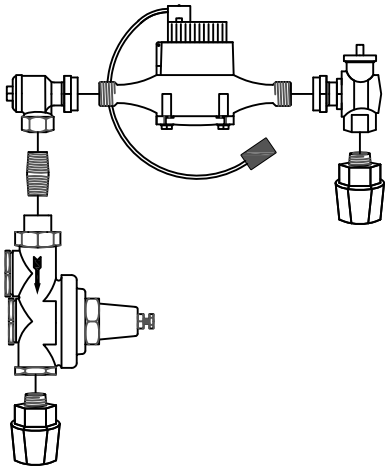

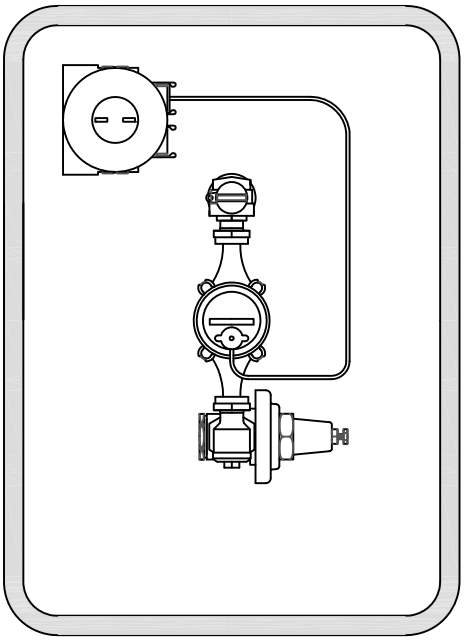

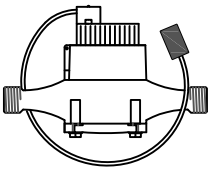

METER INSTALLED BY C.O.D. – $\frac{5}{8}$"X$\frac{3}{4}$" METER = 7$\frac{1}{2}$" FLANGE TO FLANGE, $\frac{3}{4}$"METER = 9" FLANGE TO FLANGE, 1" METER = 10$\frac{3}{4}$" FLANGE TO FLANGE.

FORD OR MUELLER ANGLE BALL METER VALVE (F.I.P. INLET/METER SWIVEL NUT OUTLET)

FORD OR MUELLER ANGLE CHECK VALVE (METER SWIVEL NUT INLET/F.I.P. OUTLET)

BRASS CLOSED NIPPLE SIZED TO MATCH PRV (RANGES FROM $\frac{3}{4}$" TO 1")

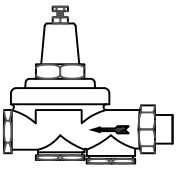

WILKINS MODEL 600 PRV (F.I.P. UNION INLET/F.I.P. OUTLET)
$\frac{5}{8}$" X $\frac{3}{4}$" AND $\frac{3}{4}$" METERS USE: $\frac{3}{4}$" PRV, FOR 1" METERS USE: 1" PRV

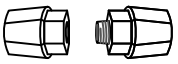

MUELLER INSTA–TITE (MALE OR FEMALE I.P. BY MODIFIED COMPRESSION)

DUVALL DESIGN STANDARDS: 2007

REVISION	BY	DATE
ADDED PART NUMBERS	DLC	10-18-10

City of Duvall

-ALTERNATE-
$\frac{5}{8}$"-1" SINGLE METER SERVICE WITH PRV's IN BOX

DRAWING NUMBER 2-09-003A

F:\Public Works\Development Guidelines\DDS Manual\2009 Update\Details\DWG\2-09-003A Retro-Fit Single Meter DC.dwg

-DOUBLE METERS WITH PRVs LOCATED IN METER BOX-

FOR RETROFITTING A NEW SERVICE TO AN EXISTING METER

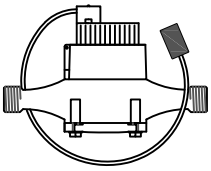

WATER METER INSTALLED BY C.O.D.
$\frac{5}{8}$"X$\frac{3}{4}$" METER = $7\frac{1}{2}$" FLANGE TO FLANGE
$\frac{3}{4}$"METER = 9" FLANGE TO FLANGE
1" METER = $10\frac{3}{4}$" FLANGE TO FLANGE

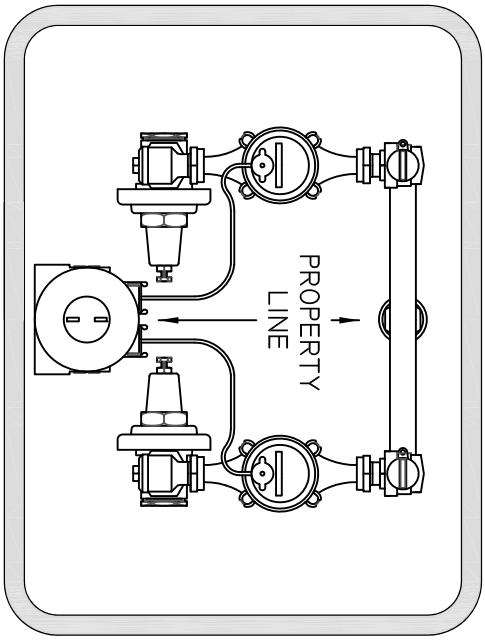

FORD OR MUELLER ANGLE CHECK VALVE
METER SWIVEL NUT INLET BY F.I.P. OUTLET

FORD OR MUELLER ANGLE BALL METER VALVE
F.I.P. INLET BY METER SWIVEL NUT OUTLET

BRASS CLOSED NIPPLE SIZED TO MATCH PRV

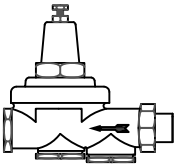

WILKINS MODEL 600 PRV
F.I.P. UNION INLET BY F.I.P. OUTLET
$\frac{5}{8}$"X$\frac{3}{4}$" AND $\frac{3}{4}$"METERS USE $\frac{3}{4}$" PRV
1" METERS USE 1" PRV

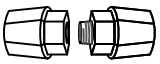

MUELLER INSTA-TITE (MALE OR FEMALE I.P. BY MODIFIED COMPRESSION)

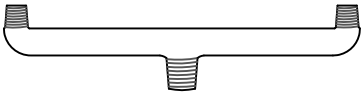

FORD OR MUELLER U-BRANCH WITH M.I.P. CONNECTIONS
OUTLET SPACING SHALL BE A MINIMUM OF 8"
$\frac{5}{8}$"X $\frac{3}{4}$" AND $\frac{3}{4}$" METERS USE: 1" INLET AND $\frac{3}{4}$" OUTLETS
1" METERS USE: $1\frac{1}{2}$" INLET AND 1" OUTLETS

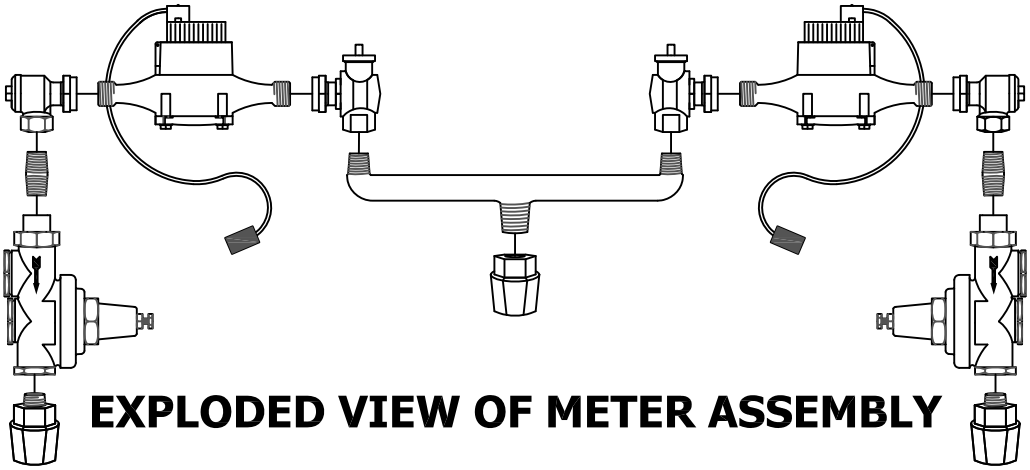

EXPLODED VIEW OF METER ASSEMBLY

DUVALL DESIGN STANDARDS: 2007

REVISION	BY	DATE
ADDED PART NUMBERS	DLC	10-14-10

City of Duvall

-ALTERNATE-
$\frac{5}{8}$"-1" DOUBLE METER SERVICE WITH PRV's IN BOX

DRAWING NUMBER 2-09-003B

F:\Public Works\Development Guidelines\DDS Manual\2009 Update\Details\DWG\2-09-003B Retro-Fit Double Meters DC.dwg

FLANGE STYLE METERS SHALL ALL BE 'SINGLES' - ONE METER PER BOX. SEE BELOW FOR BOX SELECTION
TRAFFIC BEARING: MID-STATES 1730-R WITH DUCTILE IRON LID AND READER
NON-TRAFFIC BEARING: CARSON 1730 WITH BLACK FLUSH MOUNT LID
IRRIGATION: CARSON 1730 WITH GREEN SOLID T-COVER LID

INSTALL METER BOX PER APPROVED PLANS OR FIELD FITTED PER INSPECTORS APPROVAL

BACKFILL TOPSOIL TO 2" ABOVE METER LID

SERVICE LINES TO BE HIGH DENSITY POLY-ETHELENE PIPE
C.T.S. PRESSURE CLASS 200, SIZED ACCORDING TO PLAN
WRAP WITH 10 GA SOLID LOCATOR WIRE
MINIMUM BURY FOR SERVICE LINES SHALL BE 3'
BEDDING SHALL BE 3" OF SAND ALL AROUND PIPE

FORD FB400 OR MUELLER 300 BALLCORP VALVES
AWWA/CC TAPER THREAD INLET X M.I.P. OUTLET
TURN BALL CORP TO SIDE SO WRENCH
CAN BE OPERATED VERTICALLY
IN A NARROW TRENCH

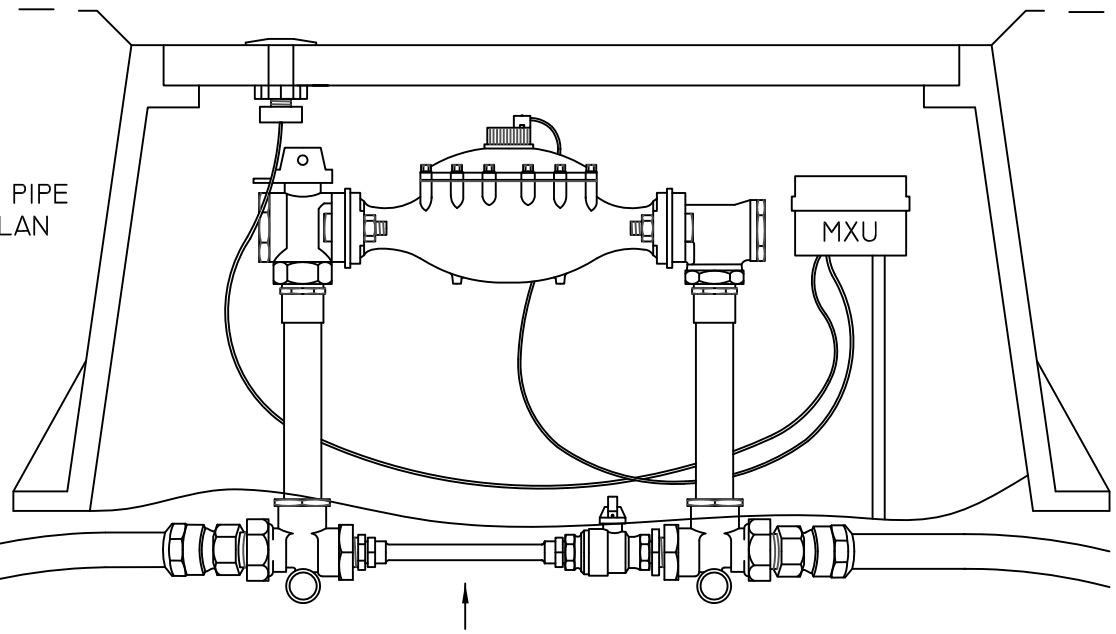

METER SETTERS SHALL BE MUELLER OR FORD AND CONSIST OF A LOCKABLE BALL VALVE METER INLET X ANGLE CHECK METER OUTLET & LOCKABLE VALVED BYPASS. SETTER CONNECTIONS MUST BE F.I.P. X F.I.P. WITH A STANDARD HEIGHT OF 18"

C.T.S. POLY LINE CONNECTIONS SHALL BE MADE WITH MUELLER 110 COMPRESSION CONNECTIONS OR FORD QUICK JOINT COUPLINGS -COMPRESSION FITTINGS SHALL BE I.P. THREAD X C.T.S.-

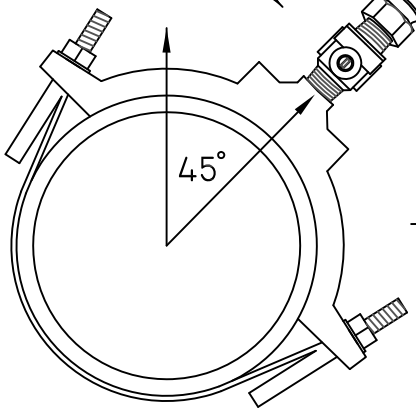

FORD FC202 OR ROMAC 202NS DUCTILE IRON SERVICE SADDLE
NYLON OR EPOXY COATED WITH STAINLESS STEEL BANDS & BOLTS
POSITION SADDLE ON PIPE SO TAP IS 45 FROM VERTICAL
AWWA/CC TAPER THREADS

SERVICE SADDLE MAY BE SUBSTITUTED FOR DIRECT TAPPING OF DUCTILE IRON PIPE 8" AND LARGER

DUVALL DESIGN STANDARDS: 2007

REVISION	BY	DATE
NEW FORMAT	DLC	03-21-11

City of Duvall

1 1/2" AND LARGER 'FLANGE STYLE' METERS

DRAWING NUMBER 2-09-004

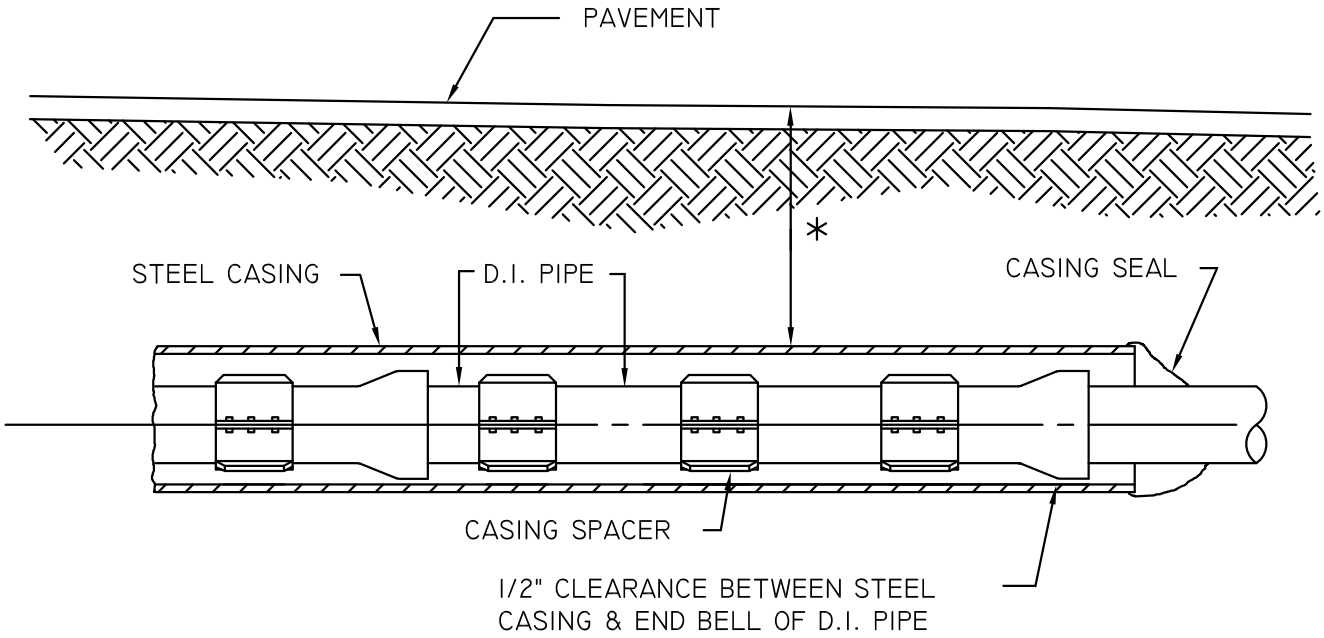

* DEPTH PER APPLICABLE CITY/COUNTY/STATE REQUIREMENTS

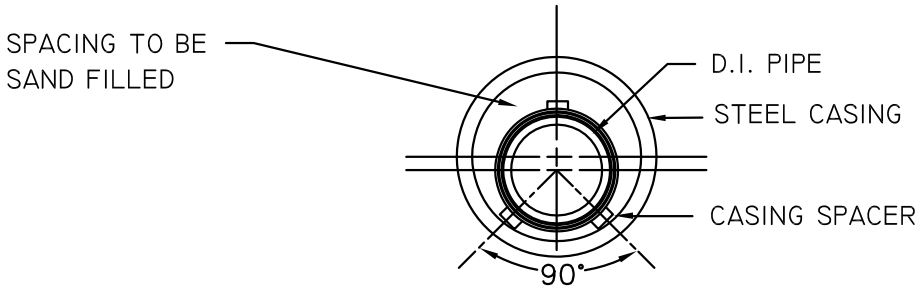

NOTES:

CASING

SIZE AND MINIMUM THICKNESS OF CASING SHALL BE AS SHOWN ON THE CONTRACT DRAWINGS. HOWEVER, THE CONTRACTOR SHALL BE RESPONSIBLE FOR SELECTING THE THICKNESS CONSISTENT WITH HIS OPERATION.

CASING SEAL

MINIMUM 3/16" THICK, SHEET TYPE SYNTHETIC RUBBER WITH STAINLESS STEEL BANDS.

City of Duvall

PIPE CASING	REVISED 5/10/07
STANDARD PLAN	2-100-001

City of Duvall

INTENTIONALLY LEFT VACANT

REVISED
10/15/08

STANDARD PLAN 2-110-001

NOTES:

IF VALVE BOX LIES WITHIN THE LANDSCAPE (NOT COUNTING PLANTER STRIP) INSTALL CONCRETE VALVE MARKERS AS SHOWN IN DETAIL 2-07-002

END OF WATER MAIN SHALL BE CAPPED AND BLOCKED ACCORDING TO THE THRUST BLOCK DETAIL 2-13-002

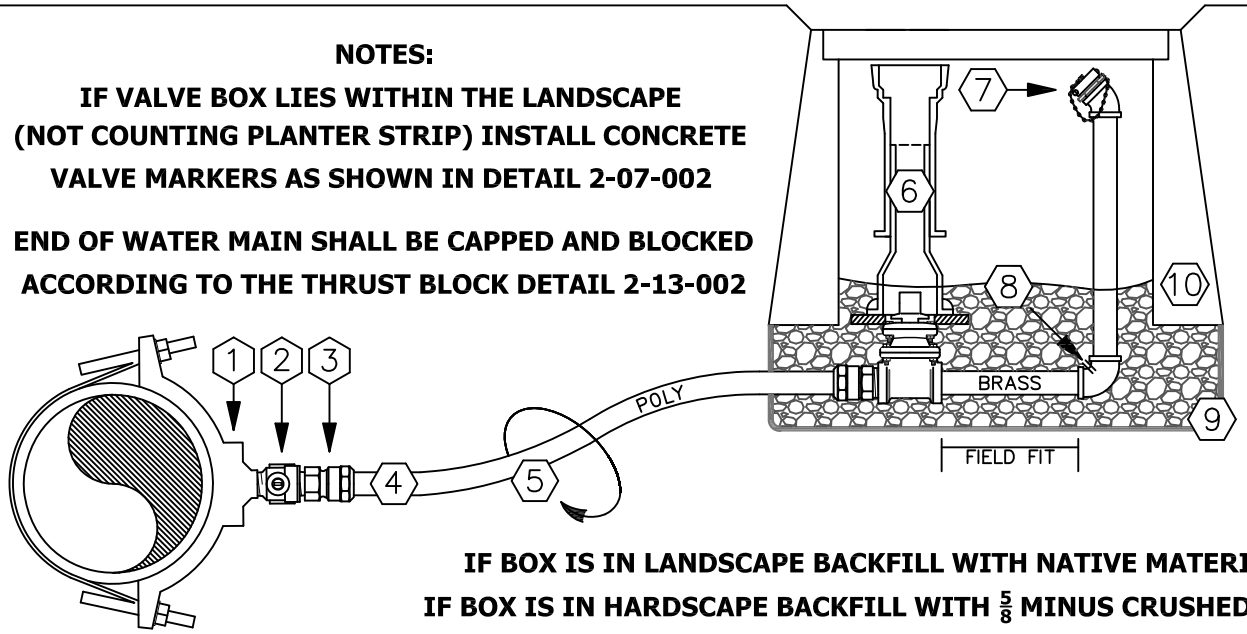

IF BOX IS IN LANDSCAPE BACKFILL WITH NATIVE MATERIAL

IF BOX IS IN HARDSCAPE BACKFILL WITH $\frac{5}{8}$ MINUS CRUSHED ROCK

1. SADDLE SHALL BE EITHER FORD FC202 OR ROMAC 202NS PLACED SO OUTLET IS ABOVE SPRING LINE
2. FORD FB400 OR MUELLER 300 BALLCORP VALVES (AWWA/CC TAPER THREAD INLET BY M.I.P. THREAD OUTLET)
3. MUELLER 110 COMPRESSION CONNECTION OR FORD QUICK JOINT COUPLING (2" C.T.S x 2" F.I.P.)
4. 2" C.T.S. POLY MAY BE USED FROM THE MAIN TO THE BOX. ALL HARD PIPES & FITTING SHALL BE 2" BRASS.
5. BED PIPE IN 3" OF SAND ON ALL SIDES.
6. 2" MUELLER RESILIENT WEDGE (N.R.S.) GATE VALVE WITH I.P.S. THREADED ENDS. PLACE GATE VALVE AS CLOSE TO BOX AS PRACTICAL. SEE DRAWING 2-07-001 FOR VALVE BOX DETAILS AND INFORMATION.
7. BRASS $2\frac{1}{2}$" MALE N.S.T. X 2" I.P.S. MALE HOSE ADAPTER & $2\frac{1}{2}$" N.S.T. LUG CAP WITH CHAIN.
8. DRILL $\frac{1}{4}$" DRAINAGE HOLE IN BRASS 90. LOCATE HOLE AT THE INSIDE OF THE TURN.
9. 1" DRAIN ROCK FILLED TO A DEPTH OF 12". USE GEOTEXTILE FABRIC AS A BARRIER BETWEEN NATIVE SOIL AND DRAIN ROCK.
10. BOX SELECTION:
    LOCATION IN LANDSCAPE- CARSON 1730 HDPE (SHOWN) WITH BLACK HDPE LIDS.
    LOCATION IN HARDSCAPE- MID-STATES 1730-R HDPE TRAFFIC RATED BOXES WITH DUCTILE IRON LIDS.

ALL EFFORTS SHALL BE MADE TO KEEP THE BOXES OUT OF A PAVED AREA. LOCATE BOX IN PLANTER STRIP IF POSSIBLE. IF NOT, LOCATE 12" BEHIND SIDEWALK. IF SIDEWALKS ARE NOT AVAILABLE PLACE BOX 6' BEHIND CURB.

DUVALL DESIGN STANDARDS: 2007

REVISION	BY	DATE
COMPLETE UPDATE	DLC	03-15-10

City of Duvall

2" BLOW OFF ASSEMBLY

DRAWING NUMBER 2-12-001

F:\Public Works\Development Guidelines\DDS Manual\2009 Update\Details\DWG\2-12-001 2" Blow off

City of Duvall

INTENTIONALLY LEFT VACANT	REVISED 5/10/07
STANDARD PLAN	2-130-001

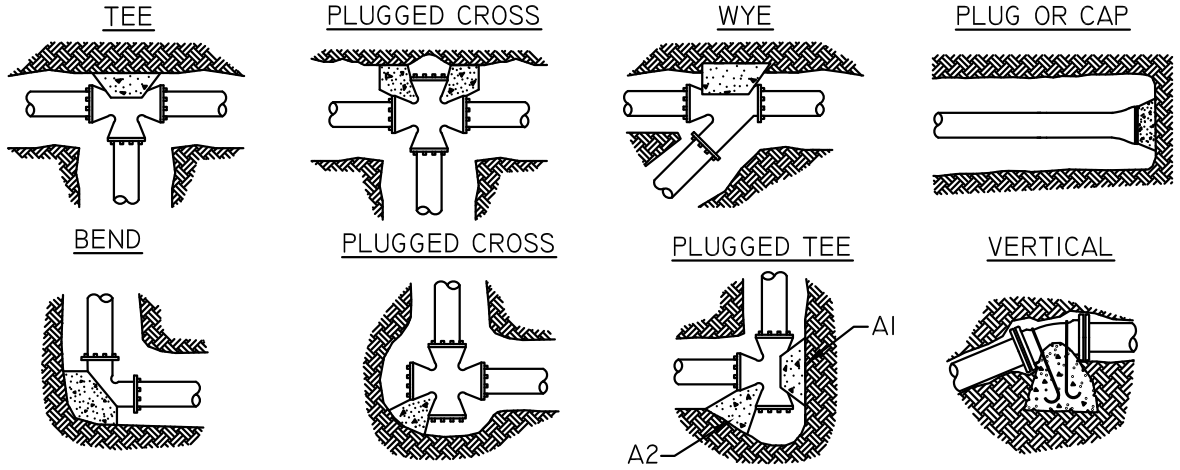

CONCRETE THRUST BLOCK SCHEDULE

BEARING AREA OF THRUST BLOCKS IN SQUARE FEET							
FITTING SIZE (INCHES)	TEE, WYE, PLUG OR CAP	90° BEND OR PLUGGED CROSS	TEE PLUGGED ON RUN BEND		45° BEND	22 1/2° BEND	11 1/4° BEND
			A1	A2			
04	1.3	1.9	2.5	1.9	1.3	1.3	1.3
06	2.8	4.0	5.7	4.0	2.1	1.3	1.3
08	5.1	7.1	10.1	7.1	3.9	2.0	1.3
10	7.9	11.2	15.7	11.2	6.1	3.2	1.6
12	11.3	16.0	22.7	16.0	8.8	4.5	2.3
14	15.3	21.7	30.7	21.7	11.9	6.1	3.1
16	20.0	28.4	40.0	28.4	15.5	8.0	4.0
18	25.3	36.0	50.7	36.0	19.5	10.1	5.1
20	31.3	44.4	62.7	44.4	24.1	12.5	6.3
24	45.3	64.0	90.7	64.0	34.9	18.1	9.1

VERTICAL VOLUME OF THRUST BLOCK IN CUBIC YARDS			
FITTING SIZE	45° BEND	22 1/2° BEND	11 1/4° BEND
4"	1.1	0.4	0.2
6"	2.7	1.0	0.4
8"	4.0	1.5	0.6
12"	8.5	3.2	1.3
16"	14.8	5.6	2.3

VERTICAL BEND		
FITTING SIZE	ROD SIZE	EMBEDMENT BEND
4" - 12"	#6	30
14" - 16"	#8	36

ABOVE BEARING AREAS BASED ON TEST PRESSURE OF 150 PSI AND AN ALLOWABLE SOIL BEARING STRENGTH OF 1,500 POUNDS PER SQUARE FOOT. TO COMPUTE BEARING AREAS FOR DIFFERENT TEST PRESSURES AND SOIL BEARING STRESSES, USE THE FOLLOWING EQUATION:
BEARING AREA = (TEST PRESSURE / 150) X (1,500 / SOIL BEARING STRESS) X (TABLE VALUE)

NOTES:

1. CONCRETE THRUST BLOCKING TO BE POURED AGAINST UNDISTURBED EARTH.
2. KEEP CONCRETE CLEAR OF JOINT AND ACCESSORIES. INSTALL 12 MIL TOTAL THICKNESS POLYETHYLENE SHEET AROUND FITTING. SECURE SHEET ENDS TO PREVENT INFILTRATION OF DIRT BETWEEN SHEET AND PIPE FITTING PRIOR TO POURING THRUST BLOCKING. PROTECT MECHANICAL JOINT FOLLOWERS AND BOLTS FROM CONCRETE WITH TEMPORARY FORMS AND 12 MIL POLYETHYLENE SHEETING.
3. THE REQUIRED THRUST BEARING AREAS FOR SPECIAL CONNECTIONS ARE SHOWN.
4. IF NOT SHOWN ON PLANS, REQUIRED BEARING AREAS AT FITTING SHALL BE AS INDICATED ABOVE, ADJUST IF NECESSARY, TO CONFORM TO THE TEST PRESSURE(S) AND ALLOWABLE SOIL BEARING STRESS(ES) STATED IN THE SPECIAL SPECIFICATIONS.
5. BEARING AREAS AND SPECIAL BLOCKING DETAILS SHOWN ON PLANS TAKE PRECEDENCE OVER BEARING AREAS AND BLOCKING DETAILS SHOWN ON THIS STANDARD DWG. BEARING AREA OF THRUST BLOCKS IS IN SQUARE FEET.
6. VERTICAL CHANGES IN DIRECTION REQUIRE SPECIFIC DESIGNS FOR THRUST BLOCKS.
7. CONCRETE MUST BE READY MIX MINIMUM 2,500 PSI MIX.
8. ALL BLOCKS TO HAVE A MINIMUM 12" THICKNESS (DIMENSION NOT SHOWN).

City of Duvall

THRUST BLOCK TABLE

REVISED 5/10/07

STANDARD PLAN

2-130-002

City of Duvall

INTENTIONALLY LEFT VACANT

REVISED
5/10/07

STANDARD PLAN

2-130-003

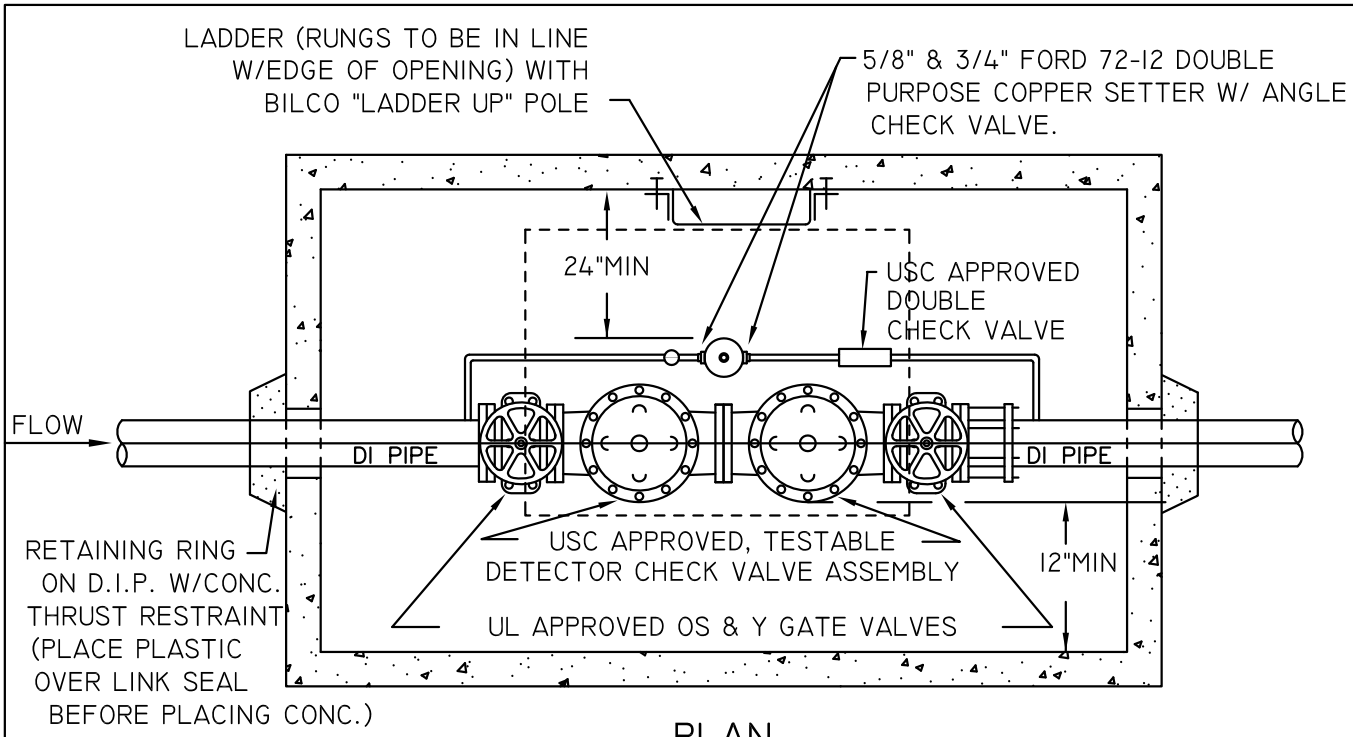

PLAN
N.T.S.

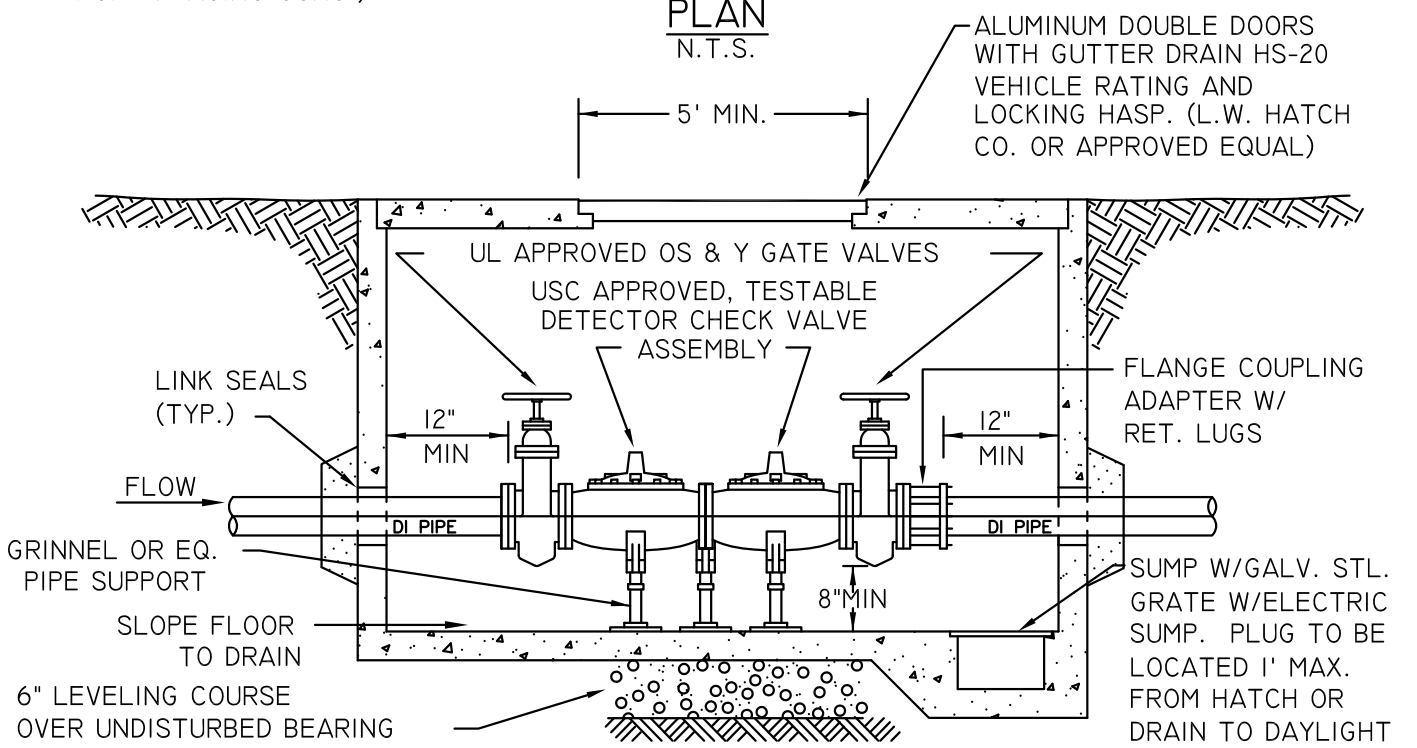

SECTION
N.T.S.

NOTES

1. 5/8" METER TO BE SUPPLIED BY CITY.
2. COVER SHALL EXTEND 6" ABOVE GRADE WHEN VAULT IS NOT IN TRAFFIC AREA AND SHALL BE FLUSH IN TRAFFIC AREA.
3. SLOPE PAVEMENT AWAY FROM COVER WHEN VAULT IS IN TRAFFIC AREA.
4. ALL BYPASSES TO BE SADDLED AND NOT DIRECT-TAPPED.

City of Duvall

DOUBLE DETECTOR CHECK VALVE	REVISED 5/10/07
STANDARD PLAN	2-153-001

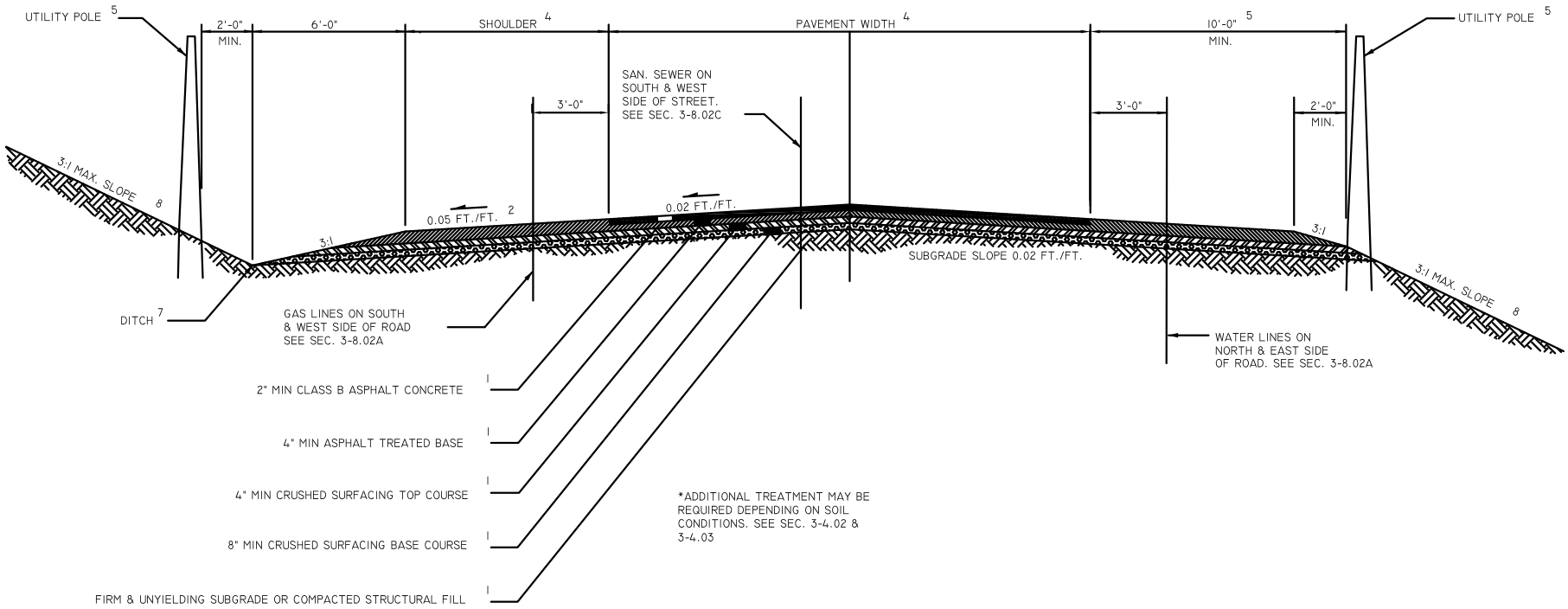

NOTES:

1. THIS DRAWING ILLUSTRATES A TYPICAL ASPHALT CONCRETE ROAD SECTION WITH GRAVEL SHOULDERS. ACTUAL SURFACING DESIGN FOR ARTERIALS AND COMMERCIAL ACCESS STREETS SHALL BE BASED ON SOILS AND TRAFFIC ANALYSIS PER SEC. 3-4.03. DESIGN FOR RESIDENTIAL ACCESS STREETS SHALL BE IN ACCORDANCE WITH SECS. 3-4.01 AND 3-4.02.
2. SHOULDERS SHALL BE SURFACED AS REQUIRED BY SECS. 3-3.07 AND 3-4.01. IF PAVED, SHOULDER SLOPE SHALL MATCH CROWN SLOPE OR 0.02 FT./FT.
3. GRADES:
   MINIMUM 0.01 FT./FT. (1.0%)
   MAXIMUM SEE SECS. 3-2.02, 3-2.03, 3-2.04, AND 3-2.11.
4. FOR WIDTHS OF PAVEMENT, SHOULDER, AND RIGHT-OF-WAY, SEE SECS. 3-2.02, 3-2.03, 3-2.04.
5. FOR CLEARANCE OF UTILITY POLES SEE SEC. 3-8.02G AND DWG. NO. 3-05-001.
6. SEE SEC. 3-3.08 FOR SEPARATED WALKWAY IF REQUIRED.
7. DITCH SECTIONS AND/OR LOCATIONS MAY VARY TO MEET REQUIREMENTS OF THE SURFACE WATER DESIGN MANUAL. FOR RURAL NEIGHBORHOOD COLLECTORS SEE DWG. NO. 3-2-024 FOR TURNPIKE SHOULDER ALTERNATIVE.
8. SEE SEC. 3-5.02 FOR SIDE SLOPE REQUIREMENTS.

City of Duvall

SHOULDER TYPE ROADWAY	REVISED 5/10/07
STANDARD PLAN	3-01-001

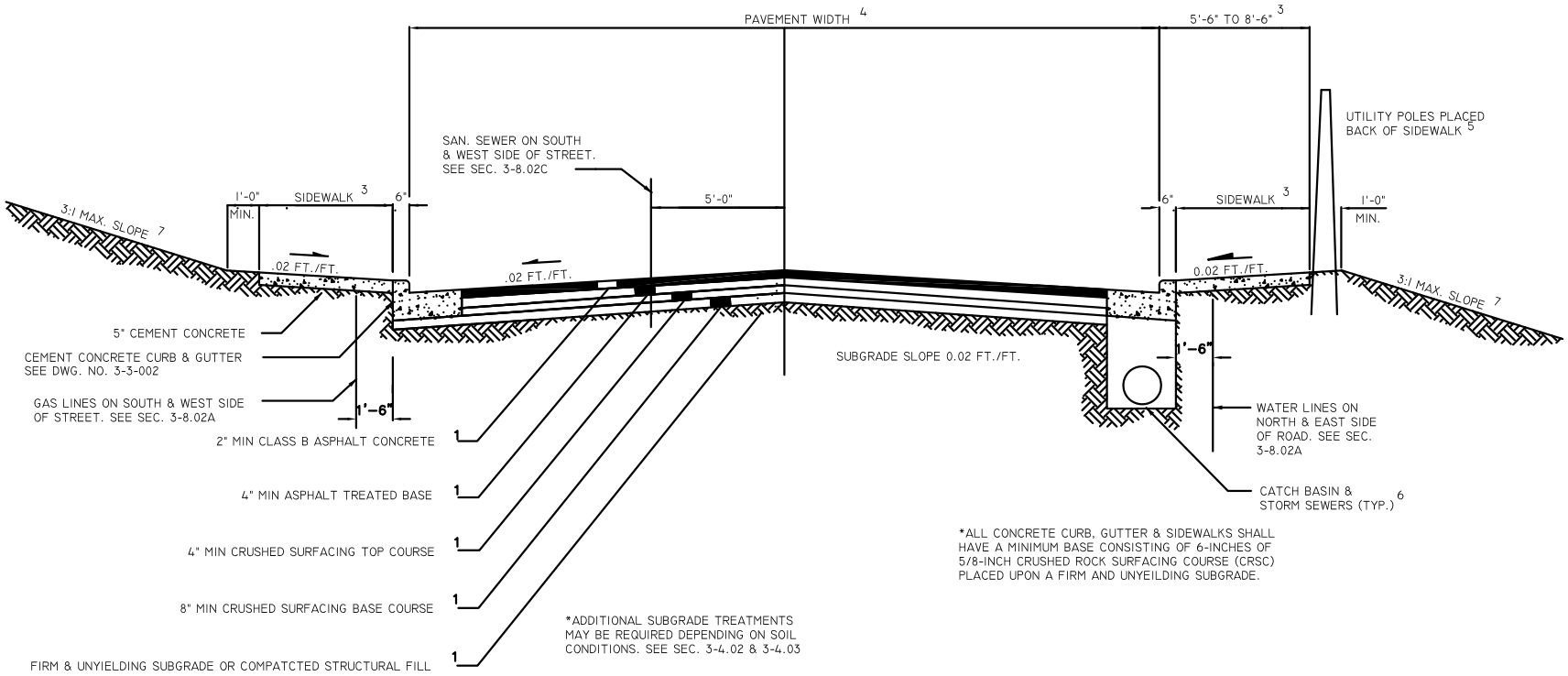

NOTES:

1. THIS DRAWING ILLUSTRATES A TYPICAL ASPHALT CONCRETE ROAD SECTION. ACTUAL SURFACING DESIGN FOR ARTERIALS AND COMMERCIAL ACCESS STREETS SHALL BE BASED ON SOILS AND TRAFFIC ANALYSIS PER SEC. 3-4.03. DESIGN FOR RESIDENTIAL ACCESS SHALL BE IN ACCORDANCE WITH SECS. 3-4.01 AND 3-4.02.

2. GRADES:
   MINIMUM 0.5%
   MAXIMUM SEE SECS. 3-2.02, 3-2.03, 3-2.04, AND 3-2.11.

3. SIDEWALK WIDTHS ARE DETERMINED IN THE DUVALL MUNICIPAL CODE CHAPTER 14. SEE ALSO SECTION 3-2.03, 3-2.04, AND 3-3.02 OF THE DUVALL DESIGN STANDARDS.

4. FOR WIDTHS OF PAVEMENT, SHOULDER, AND RIGHT-OF-WAY, SEE SECS. 3-2.02, 3-2.03, AND 3-2.04.

5. FOR CLEARANCE OF UTILITY POLES SEE SEC. 3-8.02G AND DWG. NO. 3-5-001.

6. SEE CHAPTER 4 FOR CATCH BASIN AND STORM SEWER LOCATIONS.

7. SEE SEC. 3-5.02 FOR SIDE SLOPE REQUIREMENTS.

City of Duvall

VERTICAL CURB TYPE ROADWAY	REVISED 5/10/07
STANDARD PLAN	3-01-002

City of Duvall

INTENTIONALLY LEFT VACANT

REVISED
5/10/07

STANDARD PLAN

3-01-003

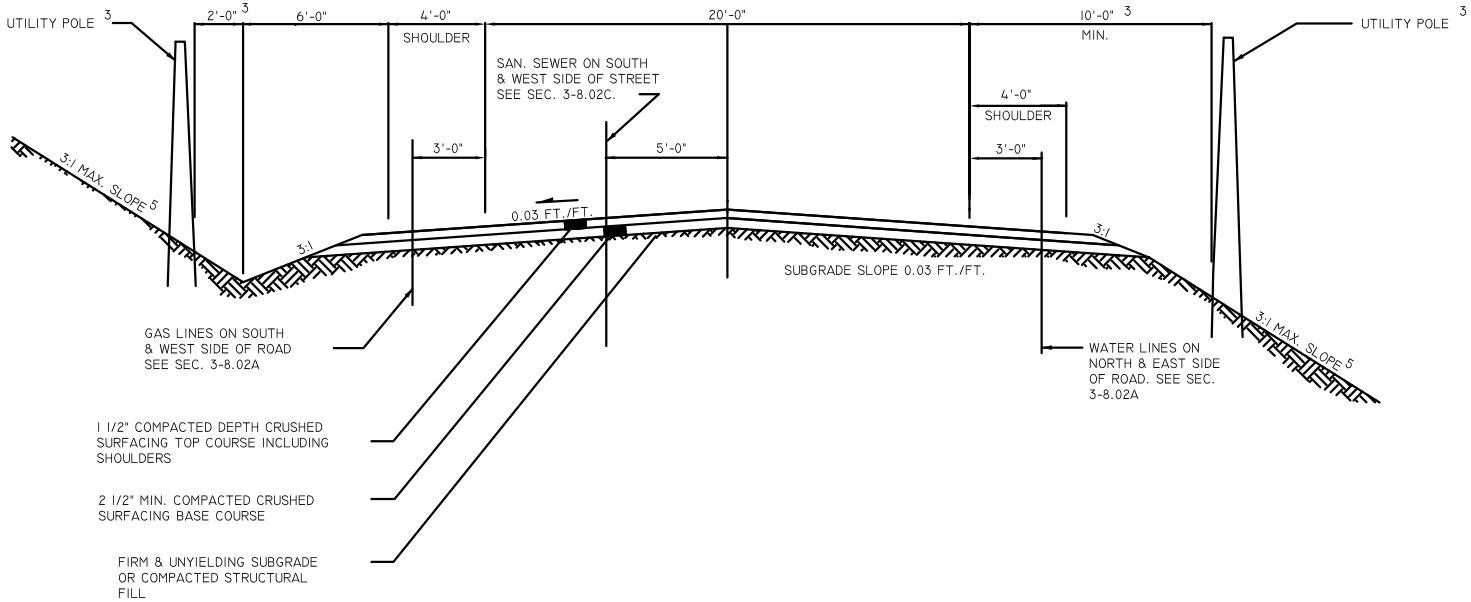

NOTES:

1. GRAVEL SURFACING IS NOT AN ACCEPTABLE SURFACE FOR PUBLIC OR PRIVATE STREETS. THIS IS MEANT TO AID IN RECONSTRUCTION OF EXISTING GRAVEL ROADWAYS.
2. GRADES:
   MINIMUM 1.0% (0.01 FT./FT.)
   MAXIMUM SEE SECS. 3-2.03 & 3-2.11.
3. FOR CLEARANCE OF UTILITY POLES SEE SEC. 8.02G & DWG. NO. 3-5-001.
4. DITCH SECTIONS AND/OR LOCATIONS MAY VARY TO MEET REQUIREMENTS OF SURFACE WATER DESIGN MANUAL.
5. SEE SEC. 3-5.02 FOR SIDE SLOPE REQUIREMENTS.

City of Duvall

GRAVEL SURFACE ROADWAY	REVISED 5/10/07
STANDARD PLAN	3-01-004

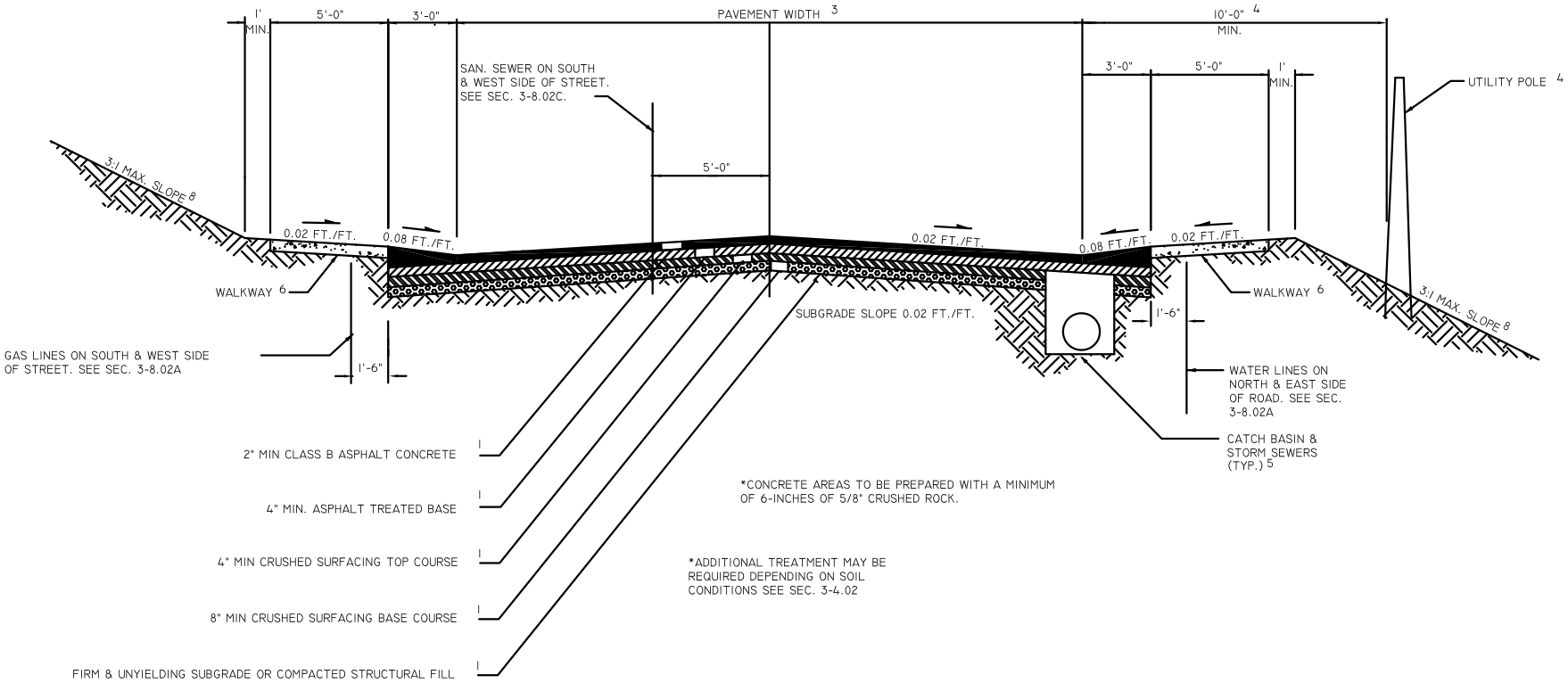

NOTES:

1. THIS DRAWING ILLUSTRATES A TYPICAL ASPHALT CONCRETE ROAD SECTION. FOR OTHER ALTERNATIVES AND POSSIBLE REQUIREMENTS FOR FRACTURED AGGREGATE OR INCREASED THICKNESS OF SURFACING MATERIALS, SEE SECS. 3-4.01 AND 3-4.02.

2. GRADES:
   MINIMUM 0.5%
   MAXIMUM SEE SECS. 3-2.03 AND 3-2.11.

3. FOR WIDTHS OF PAVEMENT AND RIGHT-OF-WAY, SEE SECS. 3-2.03.

4. FOR CLEARANCE OF UTILITY POLES SEE SEC. 3-8.02G AND DWG. NO. 3-5-001.

5. SEE CHAPTER 4 FOR CATCH BASINS AND STORM SEWER LOCATIONS.

6. WALKWAY SHALL BE CEMENT CONCRETE OR CRUSHED SURFACING AS REQUIRED BY REVIEWING AGENCY. SEE SEC. 3-4.01.

7. FOR RURAL NEIGHBORHOOD COLLECTORS, SEE DWG. NO. 3-2-024 FOR TURNPIKE SHOULDER ALTERNATIVE.

8. SEE SEC. 3-5.02 FOR SIDE SLOPE REQUIREMENTS.

City of Duvall

THICKENED EDGE ROADWAY	REVISED 5/10/07
STANDARD PLAN	3-01-005

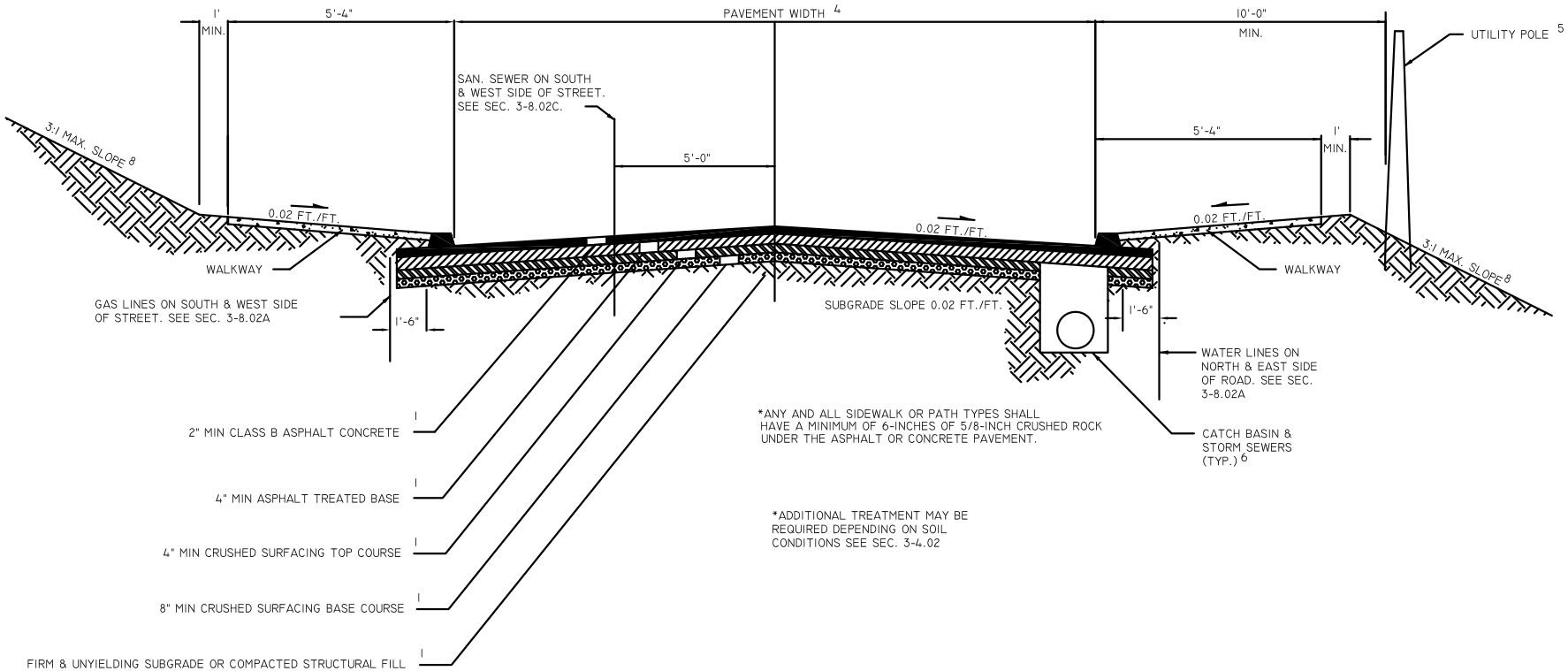

NOTES:

1. THIS DRAWING ILLUSTRATES A TYPICAL ASPHALT CONCRETE ROAD SECTION. FOR OTHER ALTERNATIVES AND POSSIBLE REQUIREMENTS FOR FRACTURED AGGREGATE OR INCREASED THICKNESS OF SURFACING MATERIALS, SEE SECS. 3-4.01 AND 3-4.02.
2. FOR EXTRUDED CURB DETAIL SEE DWG. NO. 3-3-002.
3. GRADES:
   MINIMUM 0.5%
   MAXIMUM SEE SECS. 3-2.03 AND 3-2.11.
4. FOR WIDTHS OF PAVEMENT AND RIGHT-OF-WAY, SEE SECS. 3-2.03.
5. FOR CLEARANCE OF UTILITY POLES SEE SEC. 8.02G AND DWG. NO. 3-5-001.
6. SEE CHAPTER 4 FOR CATCH BASIN AND STORM DRAIN LOCATIONS.
7. WALKWAY SHALL BE CRUSHED SURFACING OR AS REQUIRED BY REVIEWING AGENCY.
8. SEE SEC 3-5.02 FOR SIDE SLOPE REQUIREMENTS.

City of Duvall

EXTRUDED CURB ROADWAY	REVISED 5/10/07
STANDARD PLAN	3-01-006

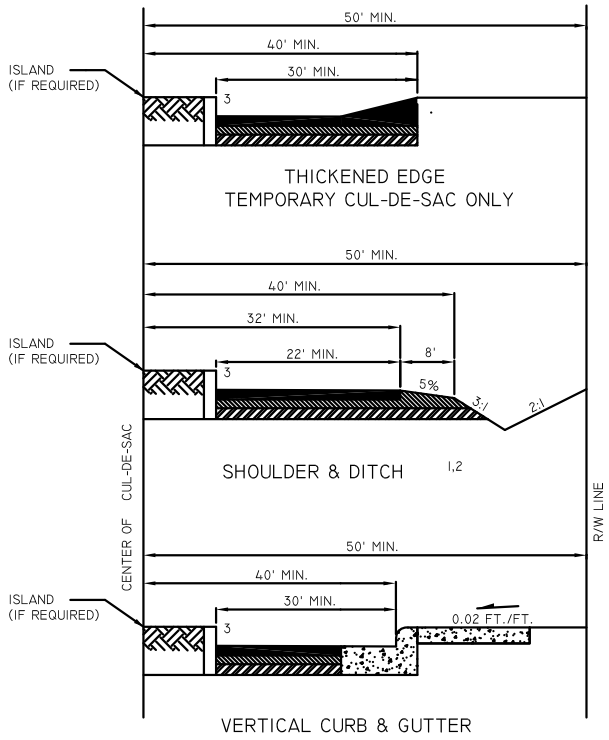

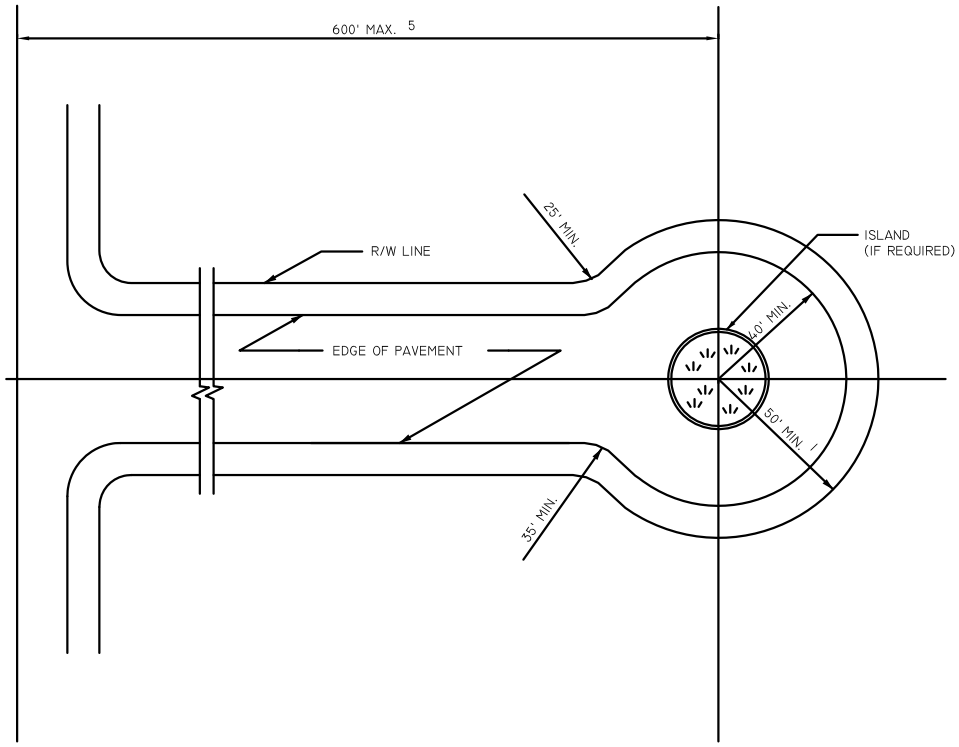

NOTES:

1. SEE SEC. 3-2.08.
2. EXTRUDED CURB IS ALSO ACCEPTABLE FOR OUTER EDGE AS ALTERNATIVE TO SHOULDER AND DITCH. SEE DWG. NO. 3-1-006. FOR OLD TOWN AND PRIVATE ACCESS TRACT ONLY.
3. ISLAND AT CENTER OF BULB SHALL HAVE VERTICAL CURB. SEE DWG. NO. 3-3-002.
4. ISLAND IS OPTIONAL WHEN RADIUS OF PAVED AREA IS 40' OR LESS.
5. SEE SEC 3-2.08 FOR CUL-DE-SAC LENGTH EXCEPTION.
6. SEE SECS. 3-2.03, 3-2.08, AND 3-2.09 FOR RIGHT-OF-WAY REDUCTION REQUIREMENTS

City of Duvall

CUL-DE-SACS	REVISED 5/10/07
STANDARD PLAN	3-01-007

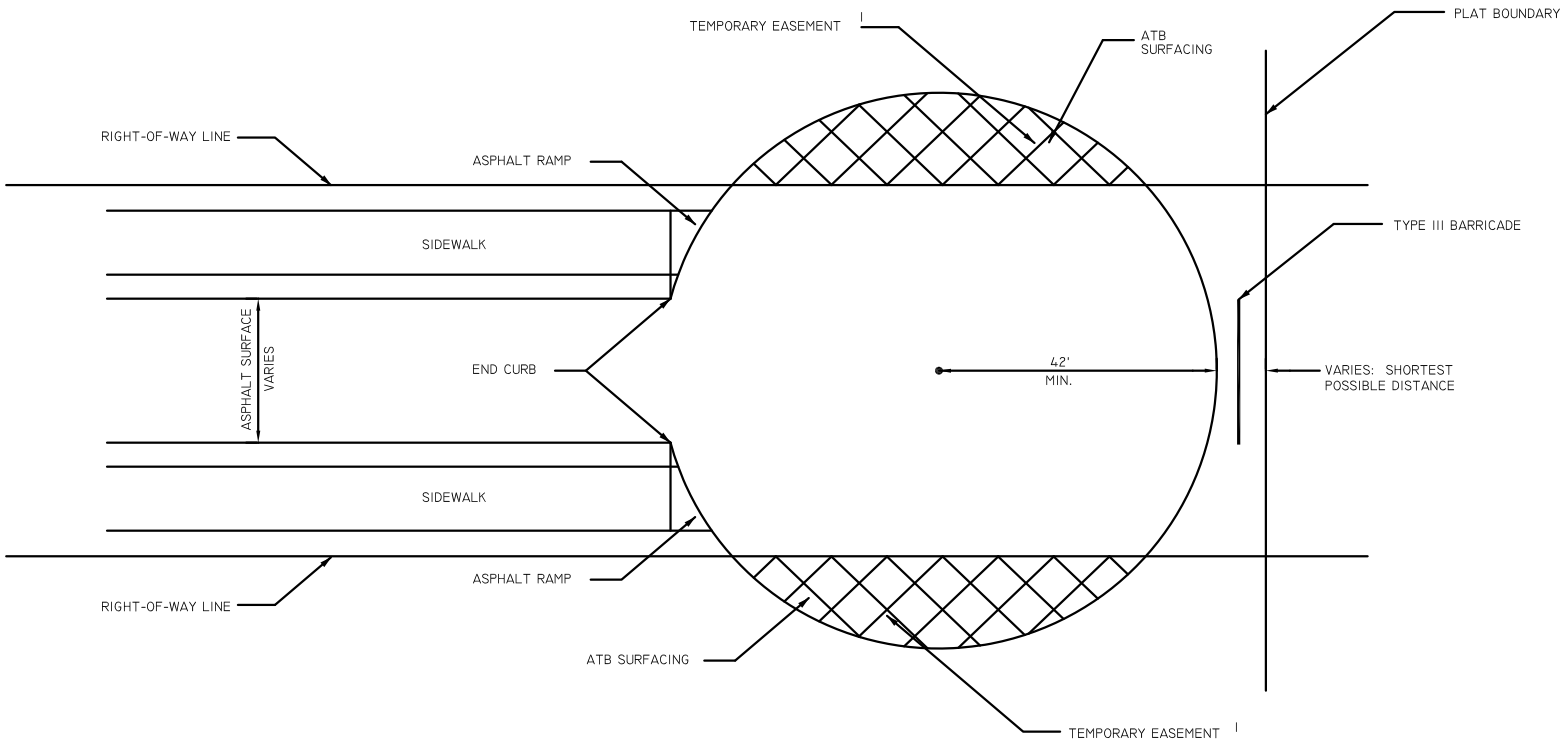

NOTES:

1. SEE SEC. 3-2.08.
2. BARRICADE REQUIRED AT END OF BULB. SEE SEC. 3-5.07.

City of Duvall

TEMPORARY CUL-DE-SAC	REVISED 5/10/07
STANDARD PLAN	3-01-008

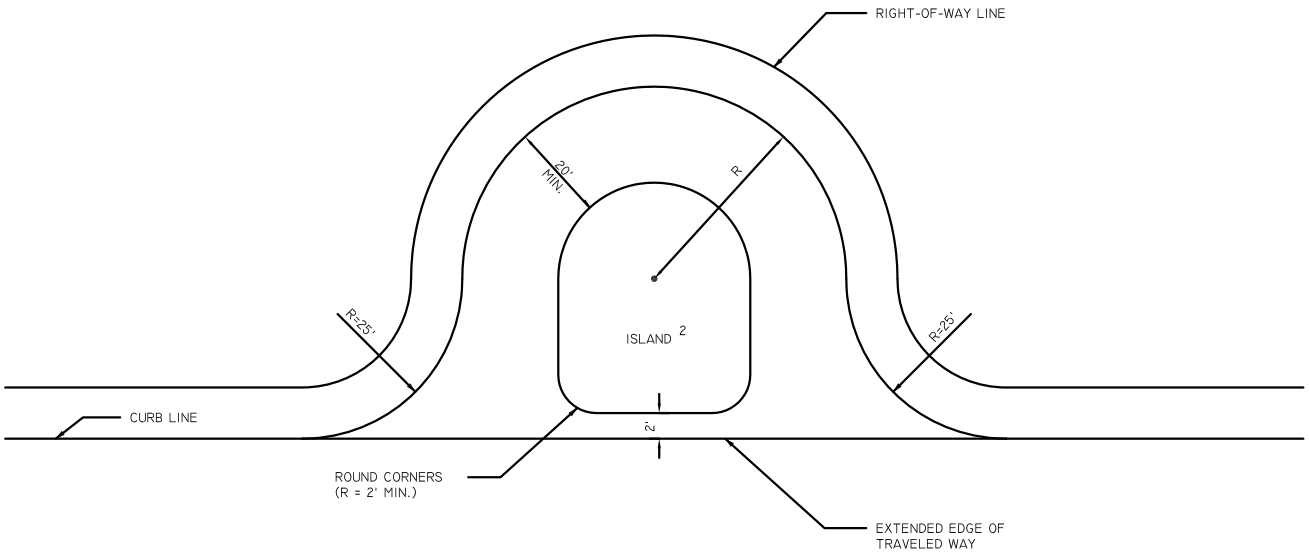

NOTES:

1. SEE SEC. 3-2.08 F.
2. ISLAND REQUIRED ON EYEBROWS WITH R GREATER THAN 25 FEET.
3. MINIMUM ISLAND DIAMETER SHALL BE 10 FEET.

City of Duvall

EYEBROW	REVISED 5/10/07
STANDARD PLAN	3-01-009

URBAN

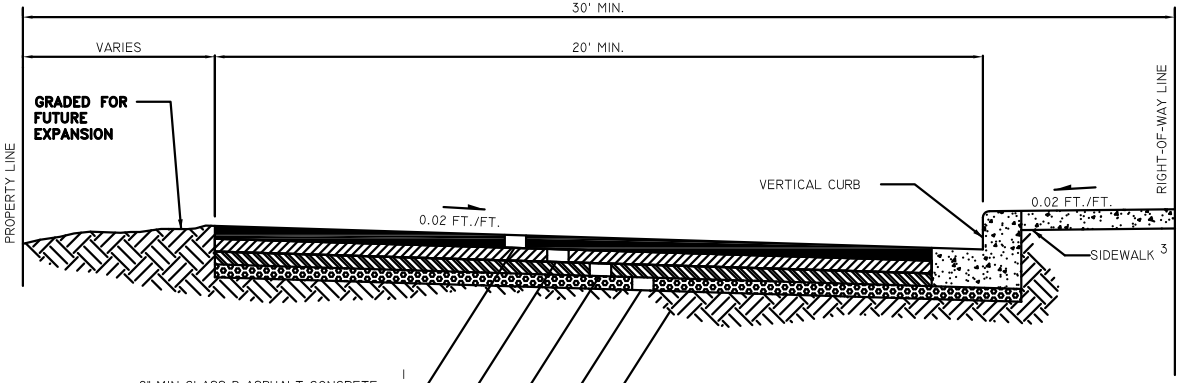

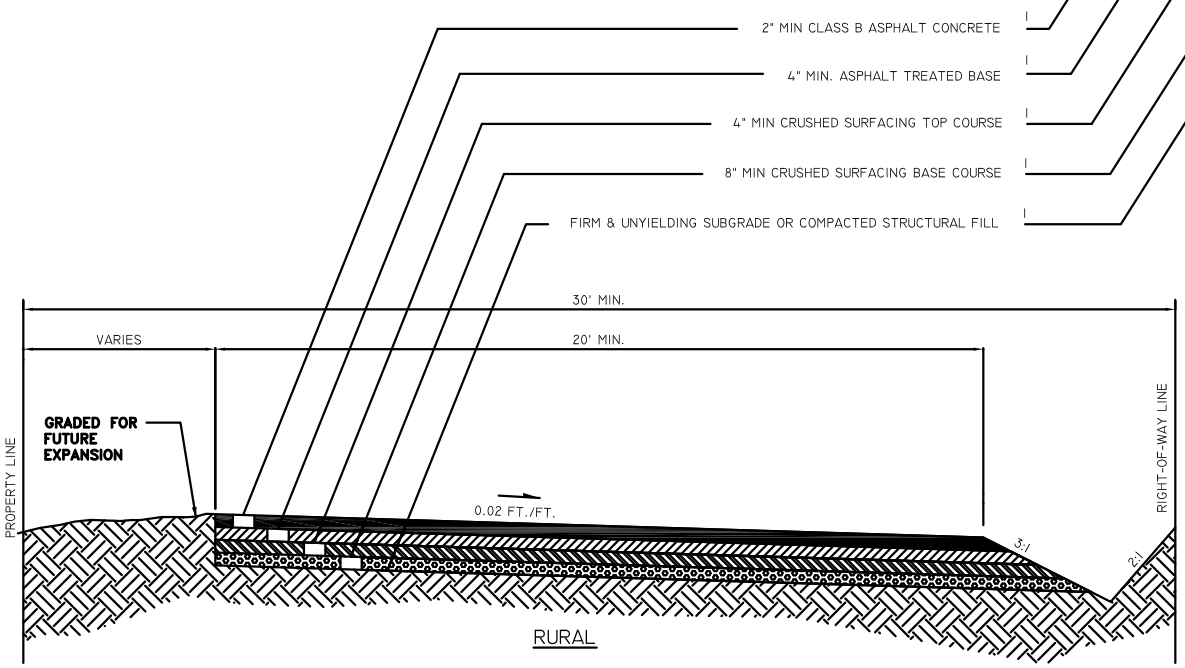

* ALL ROADWAY DESIGN CRITERIA SHALL BE GOVERNED BY CHAPTER 3 IN THE DUVALL DESIGN STANDARDS. ILLUSTRATION IS VALID FOR MINIMUM PAVEMENT WIDTH REQUIREMENTS ONLY.

RURAL

NOTE:

1. THIS DRAWING ILLUSTRATES A TYPICAL ASPHALT CONCRETE ROAD SECTION WITH GRAVEL SHOULDERS. ACTUAL SURFACING DESIGN FOR ARTERIALS AND COMMERCIAL ACCESS STREETS SHALL BE BASED ON SOILS AND TRAFFIC ANALYSIS PER SEC. 3-4.03. DESIGN FOR RESIDENTIAL ACCESS STREETS SHALL BE IN ACCORDANCE WITH SECS. 3-4.01 AND 3-4.02.
2. SEE SEC. 3-2.07.
3. SEE SEC. 3-3.02.
4. EDGE OF PAVEMENT TO BE CONSTRUCTED AS SHOWN FOR CUT OR FILL SECTION AS APPROPRIATE.

City of Duvall

HALF STREET	REVISED 5/10/07
STANDARD PLAN	3-01-010

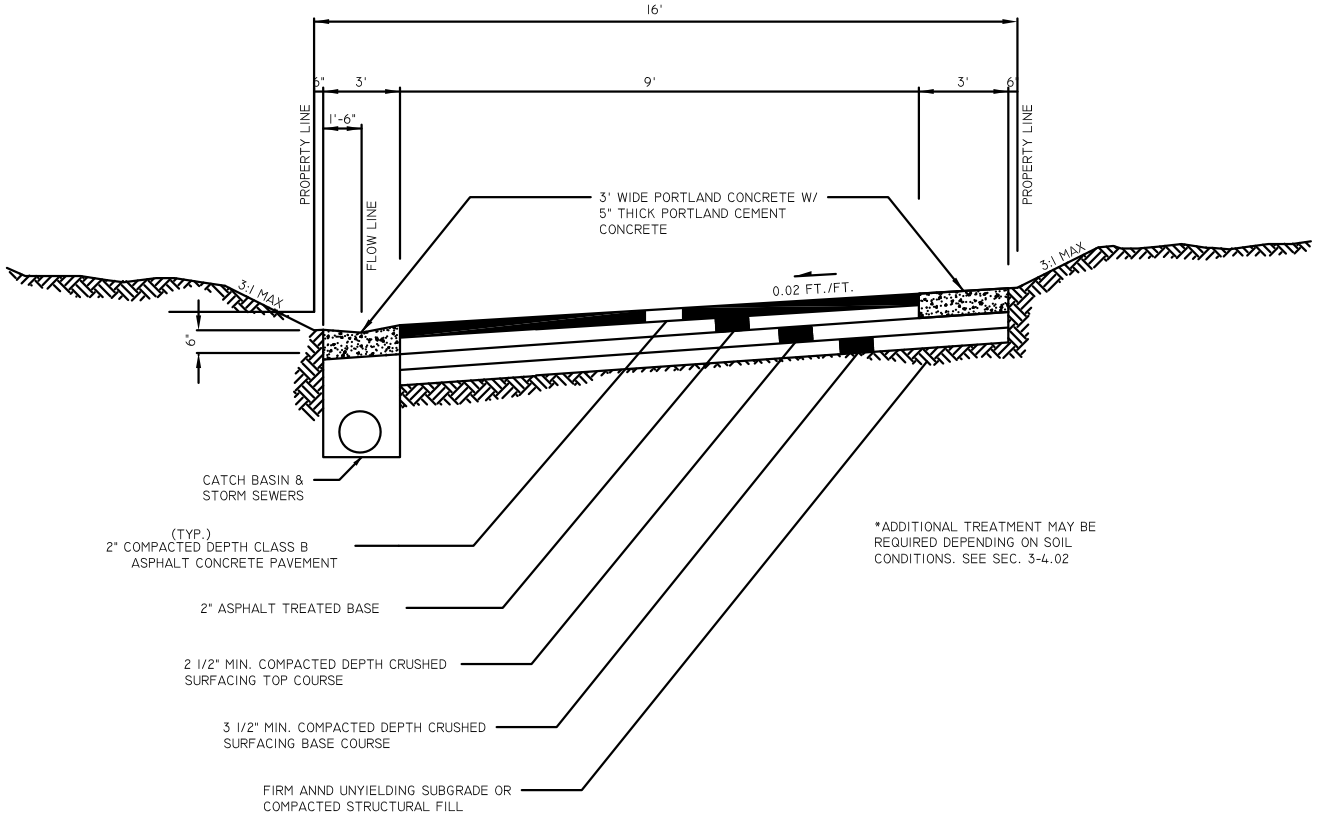

NOTES:

*SEE SEC. 3-2.09

*CROSS SLOPE OR NORMAL CROWN ROADWAY SECTIONS ACCEPTED. NO REVERSE OR INVERTED CROWN ROADWAY SECTIONS ACCEPTED UNLESS ENTIRE WIDTH IS PORTLAND CEMENT CONCRETE AND UPON APPROVAL OF CITY ENGINEER.

City of Duvall

ALLEY PAVEMENT DETAIL	REVISED 5/10/07
STANDARD PLAN	3-01-011

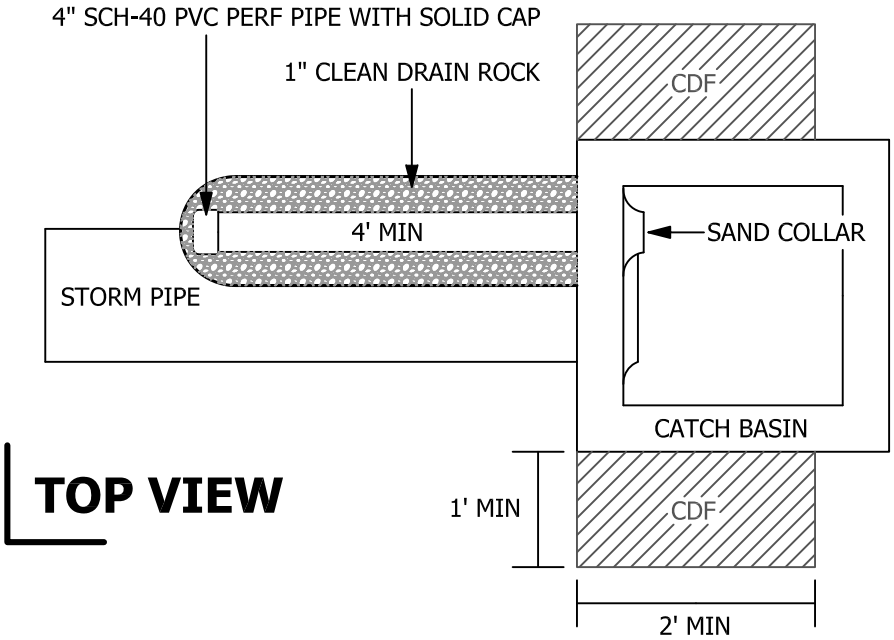

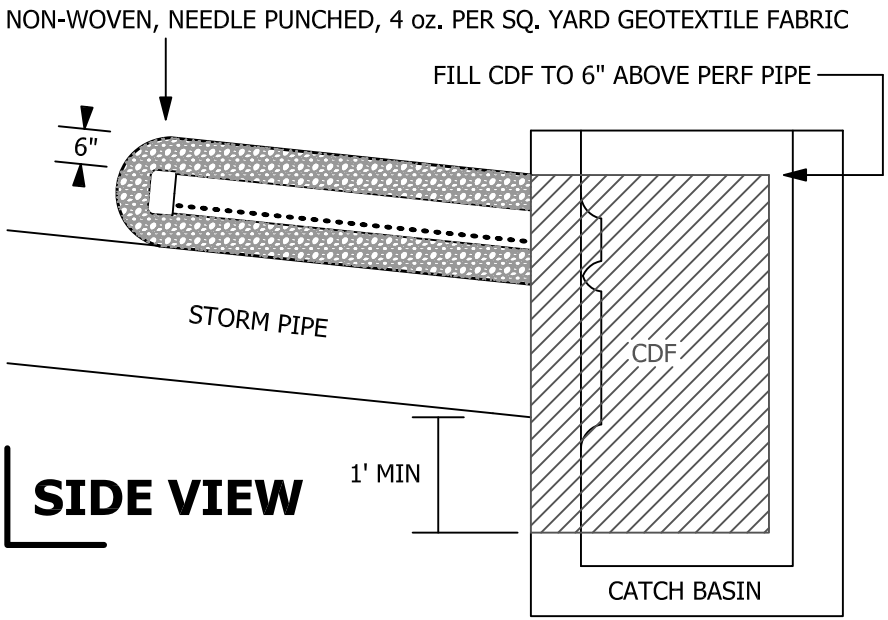

SURFACE SLOPE DETERMINES THE NEED FOR TRENCH DAMS:

PIPE SLOPE:	TRENCH DAM SPACING:
0-7%	NONE
7-10%	EVERY 200'
10-15%	EVERY 150'
15-20%	EVERY 100'
20% <	CONSULT THE ENGINEER

NOTES:

TRENCH DAMS SHALL CONSIST OF CDF (CONTROLLED DENSITY FILL) OR AN APPROVED EQUIVALENT. EACH TRENCH DAM SHALL BE NOTCHED AT LEAST 12 INCHES INTO THE BASE AND SIDES OF THE TRENCH TO KEY THE BARRIER INTO THE NATIVE SOILS. CARE MUST BE TAKEN DURING BARRIER CONSTRUCTION TO AVOID PIPE DAMAGE. IT IS RECOMMENDED THAT THE TRENCH DAMS BE INSTALLED IN CONJUNCTION WITH THE STORM PIPE AND CBS's.

THE CDF BARRIERS SHALL EXTEND FROM THE BASE OF THE KEYED TRENCH TO A DISTANCE OF AT LEAST 6" ABOVE THE PERF PIPE MEASURED AT THE CATCH BASIN. CDF SHALL BE POURED DIRECTLY UP AGAINST A CLEAN TYPE I OR TYPE 2 CATCH BASIN.

THE EXACT LOCATIONS SHALL BE FIELD FIT BY THE CONTRACTOR AND APPROVED BY THE CITY INSPECTOR OR ENGINEER. IT IS THE CONTRACTORS RESPONSIBILITY TO AS-BUILT TRENCH DAM LOCATIONS. TRENCH DAMS MAY BE ADDED OR REMOVED AS NECESSARY BY THE INSPECTOR OR ENGINEER.

DUVALL DESIGN STANDARDS: 2007

REVISION	BY	DATE
Pipe size reduced	DLC	10-07-10

City of Duvall

INLINE TRENCH DAM

DRAWING NUMBER 3-01-012

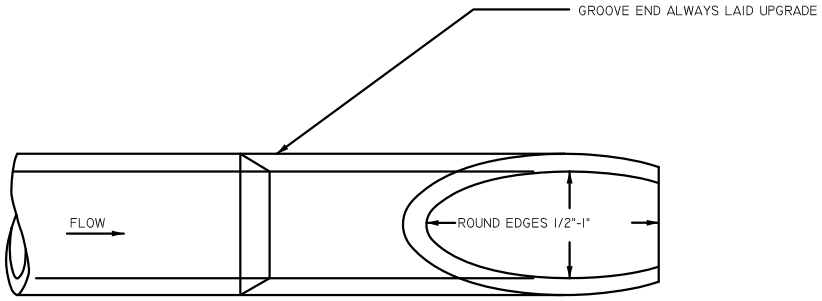

PLAN

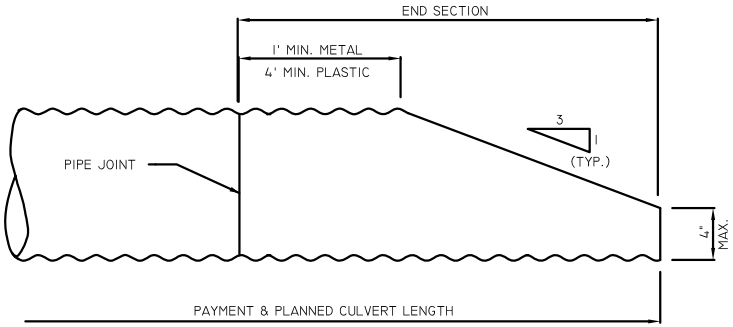

METAL & PLASTIC PIPE

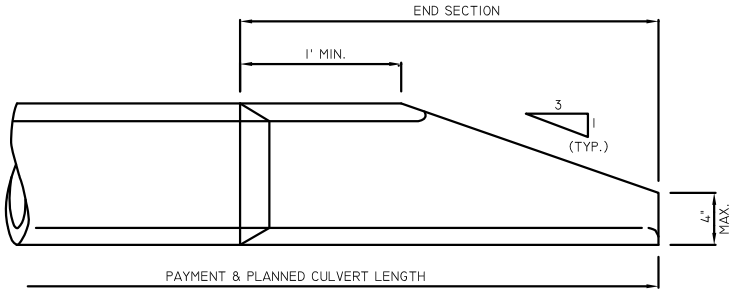

ELEVATION

CONCRETE PIPE

NOTE:

SIDE SLOPE SHALL BE WARPED TO MATCH THE BEVELED PIPE END. WHEN CULVERT IS ON SKEW, BEVELED END SHALL BE ROTATED TO CONFORM TO SLOPE. IF SLOPE DIFFERS FROM 3:1, PIPE SHALL BE BEVELED TO MATCH SLOPE.

City of Duvall

BEVELED END PIPE SECTION	REVISED 5/10/07
STANDARD PLAN	3-02-001

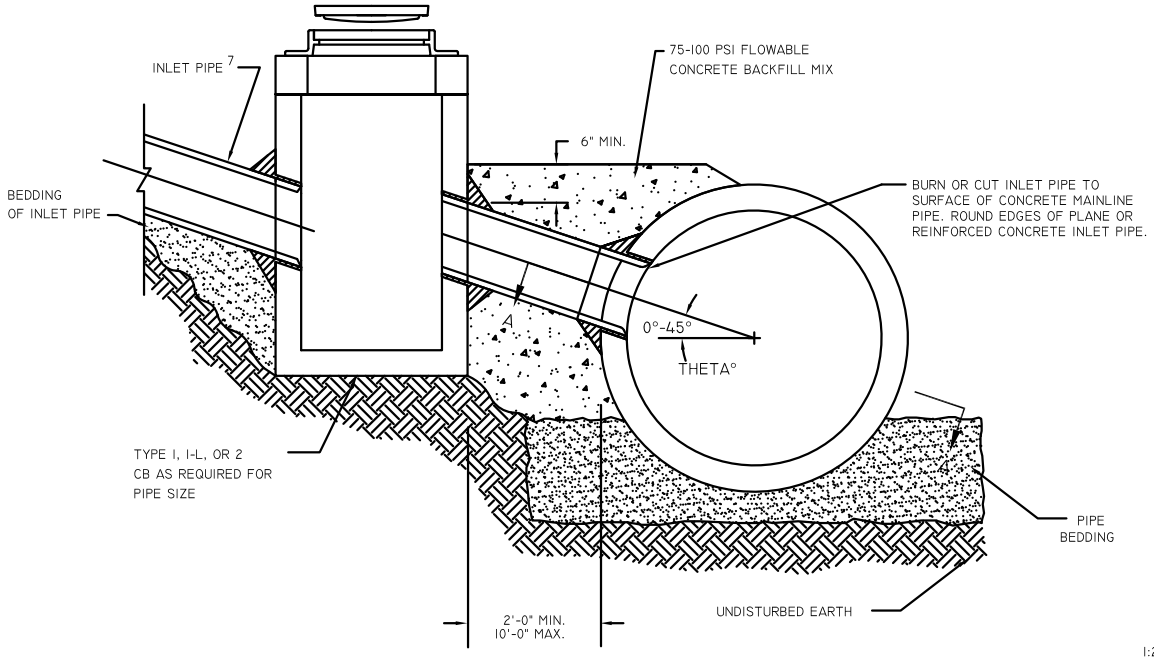

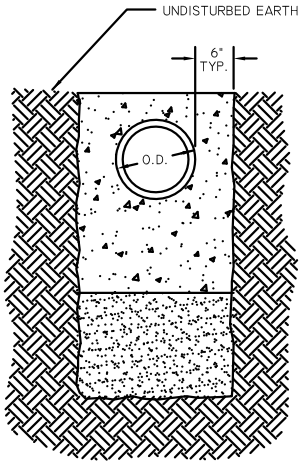

SECTION B-B

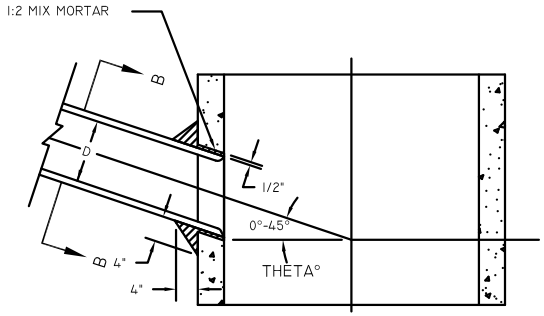

SECTION A-A

NOTES:

1. "D", THE INSIDE DIAM. OF THE INLET PIPE, SHALL BE 24" OR LESS. FOR LARGER VALUES OF "D", USE AN APPROVED STRUCTURE.
2. IN NO CASE SHALL THE OUTSIDE DIAM. OF THE INLET PIPE EXCEED ONE-HALF THE INSIDE DIAM. OF THE MAIN STORM SEWER.
3. ℄ OF INLET PIPE SHALL BE ON RADIUS OF MAIN STORM DRAIN.
4. THE MIN. OPENING INTO THE EXISTING STORM DRAIN SHALL BE THE OUTSIDE DIAM. OF THE INLET PIPE PLUS 1 INCH
5. IF THETA° IS GREATER THAN 45° FIELD TAPPING IS NOT ALLOWED.
6. SEE SEC. 3-7.04.
7. SEE SEC. 3-7.03 FOR ALLOWED INLET PIPE TYPE.
8. MAINLINE SHALL HAVE 48" MIN. DIAM.

City of Duvall

FIELD TAPPING OF CONCRETE PIPE	REVISED 5/10/07
STANDARD PLAN	3-02-002

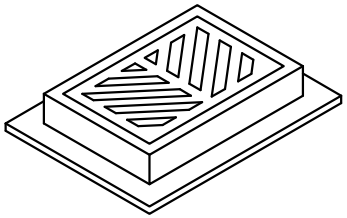

FRAME AND GRATE
SEE SEC. 3-7.05 AND
APPLICABLE DWGS.

*VANED GRATE REQUIRED
FOR INLETS ON ROADS
WITH 5% SLOPE OR GREATER

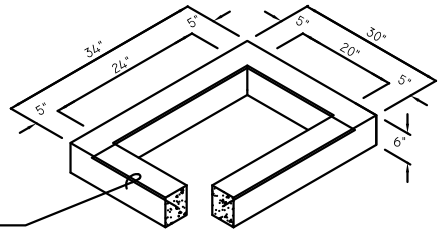

6" RISER SECTION

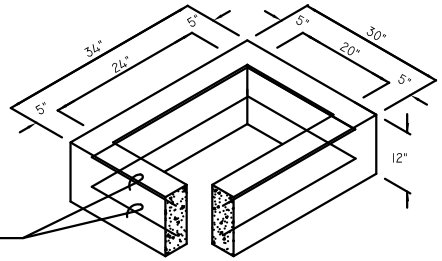

12" RISER SECTION

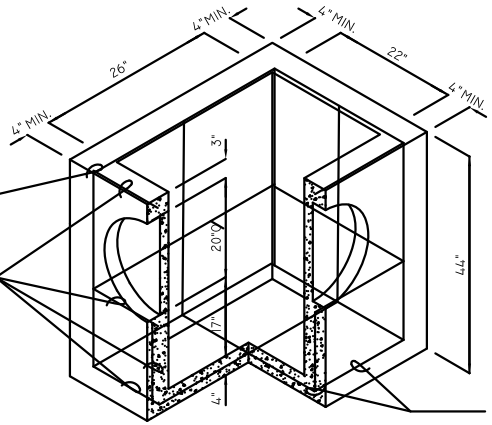

PRECAST BASE SECTION
(MEASUREMENT AT THE TOP
OF THE BASE)

NOTES:

1. CATCH BASINS SHALL BE CONSTRUCTED IN ACCORDANCE WITH ASTM C478 (AASHTO M 199) & C890 UNLESS OTHERWISE SHOWN ON PLANS OR NOTED IN THE WSDOT/APWA STANDARD SPECIFICATIONS.
2. AS AN ACCEPTABLE ALTERNATIVE TO REBAR, WELDED WIRE FABRIC HAVING A MIN. AREA OF 0.12 SQUARE INCHES PER FOOT MAY BE USED. WELDED WIRE FABRIC SHALL COMPLY TO ASTM A497 (AASHTO M 221). WIRE FABRIC SHALL NOT BE PLACED IN KNOCKOUTS.
3. ALL REINFORCED CAST-IN-PLACE CONCRETE SHALL BE CLASS 4000 (4000 PSI).
4. PRECAST BASES SHALL BE FURNISHED WITH CUTOUTS OR KNOCKOUTS. KNOCKOUTS SHALL HAVE A WALL THICKNESS OF 2" MIN. ALL PIPE SHALL BE INSTALLED IN FACTORY PROVIDED KNOCKOUTS. UNUSED KNOCKOUTS NEED NOT BE GROUTED IF WALL IS LEFT INTACT.
5. KNOCKOUT OR CUTOUT HOLE SIZE IS EQUAL TO PIPE OUTER DIAM. PLUS CATCH BASIN WALL THICKNESS.
6. ROUND KNOCKOUTS MAY BE ON ALL 4 SIDES, WITH MAX. DIAM. OF 20". KNOCKOUTS MAY BE EITHER ROUND OR "D" SHAPE.
7. THE MAX. DEPTH FROM THE FINISHED GRADE TO THE PIPE INVERT IS 5'-0".
8. THE TAPER ON THE SIDES OF THE PRECAST BASE SECTION AND RISER SECTION SHALL NOT EXCEED 1/2"/FT.
9. CATCH BASIN FRAME AND GRATE SHALL BE IN ACCORDANCE WITH STANDARD SPECIFICATIONS AND MEET THE STRENGTH REQUIREMENTS OF FEDERAL SPECIFICATION RR-F-621D. MATING SURFACES SHALL BE FINISHED TO ASSURE NON-ROCKING FIT WITH ANY COVER POSITION.
10. FRAME AND GRATE MAY BE INSTALLED WITH FLANGE DOWN OR CAST INTO RISER.
11. FOR CATCH BASINS IN PARKING LOTS REFER TO WSDOT/APWA STANDARD DWG. B1-B.
12. EDGE OF RISER OR BRICK SHALL NOT BE MORE THAN 2" FROM VERTICAL EDGE OF CATCH BASIN WALL.
13. GROUT IN BETWEEN (ALL CONTACT SURFACES) ALL RISERS AND CATCH BASIN WITH APPROVED GROUT.

City of Duvall

CATCH BASIN TYPE 1	REVISED 5/10/07
STANDARD PLAN	3-02-003

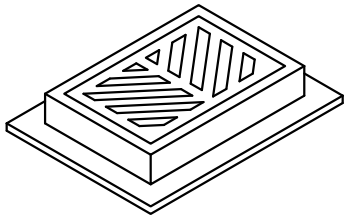

FRAME AND GRATE
SEE SEC. 3-7.05 AND
APPLICABLE DWGS.

*VANED GRATE REQUIRED
FOR INLETS ON ROADS
WITH 5% SLOPE OR GREATER

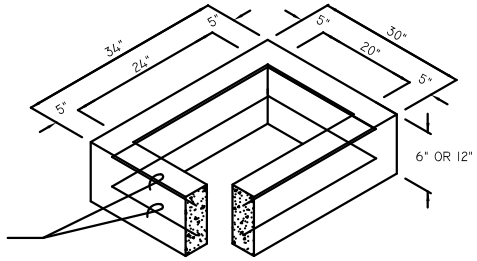

RISER SECTION

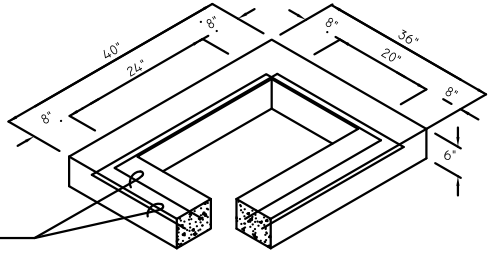

6" REDUCING SECTION

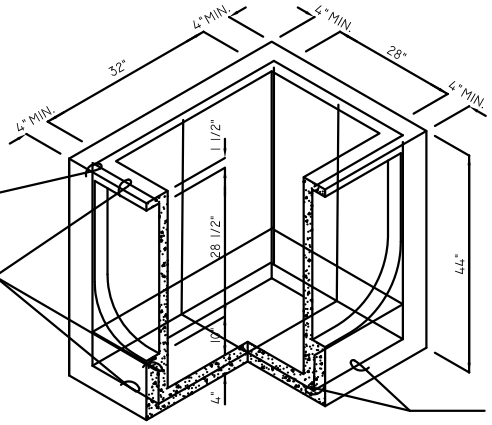

PRECAST BASE SECTION
(MEASUREMENT AT THE TOP
OF THE BASE)

NOTES:

1. CATCH BASINS SHALL BE CONSTRUCTED IN ACCORDANCE WITH ASTM C478 (AASHTO M 199) & C890 UNLESS OTHERWISE SHOWN ON PLANS OR NOTED IN THE WSDOT/APWA STANDARD SPECIFICATIONS.
2. AS AN ACCEPTABLE ALTERNATIVE TO REBAR, WELDED WIRE FABRIC HAVING A MIN. AREA OF 0.12 SQUARE INCHES PER FOOT MAY BE USED. WELDED WIRE FABRIC SHALL COMPLY TO ASTM A497 (AASHTO M 221). WIRE FABRIC SHALL NOT BE PLACED IN KNOCKOUTS.
3. ALL REINFORCED CAST-IN-PLACE CONCRETE SHALL BE CLASS 4000 (4000 PSI).
4. PRECAST BASES SHALL BE FURNISHED WITH CUTOUTS OR KNOCKOUTS. KNOCKOUTS SHALL HAVE A WALL THICKNESS OF 2" MIN. ALL PIPE SHALL BE INSTALLED IN FACTORY PROVIDED KNOCKOUTS. UNUSED KNOCKOUTS NEED NOT BE GROUTED IF WALL IS LEFT INTACT.
5. KNOCKOUT OR CUTOUT HOLE SIZE IS EQUAL TO PIPE OUTER DIAM. PLUS CATCH BASIN WALL THICKNESS.
6. KNOCKOUTS MAY BE ON ALL 4 SIDES WITH MAX. DIAM. OF 28". KNOCKOUTS MAY BE EITHER ROUND OR "D" SHAPE.
7. THE TAPER ON THE SIDES OF THE PRECAST BASE SECTION AND RISER SECTION SHALL NOT EXCEED 1/2"/FT.
8. CATCH BASIN FRAME AND GRATE SHALL BE IN ACCORDANCE WITH STANDARD SPECIFICATIONS AND MEET THE STRENGTH REQUIREMENTS OF FEDERAL SPECIFICATION RR-F-621D. MATING SURFACES SHALL BE FINISHED TO ASSURE NON-ROCKING FIT WITH ANY COVER POSITION.
9. FRAME AND GRATE MAY BE INSTALLED WITH FLANGE DOWN OR CAST INTO RISER.
10. MAX. DEPTH FROM FINISHED GRADE TO PIPE INVERT SHALL BE 5'-0".
11. EDGE OF REDUCING SECTION OR BRICK SHALL NOT BE MORE THAN 2" FROM VERTICAL EDGE OF CATCH BASIN WALL.
12. GROUT IN BETWEEN (ALL CONTACT SURFACES) ALL RISERS AND CATCH BASIN WITH APPROVED GROUT.

City of Duvall

CATCH BASIN TYPE IL	REVISED 5/10/07
STANDARD PLAN	3-02-004

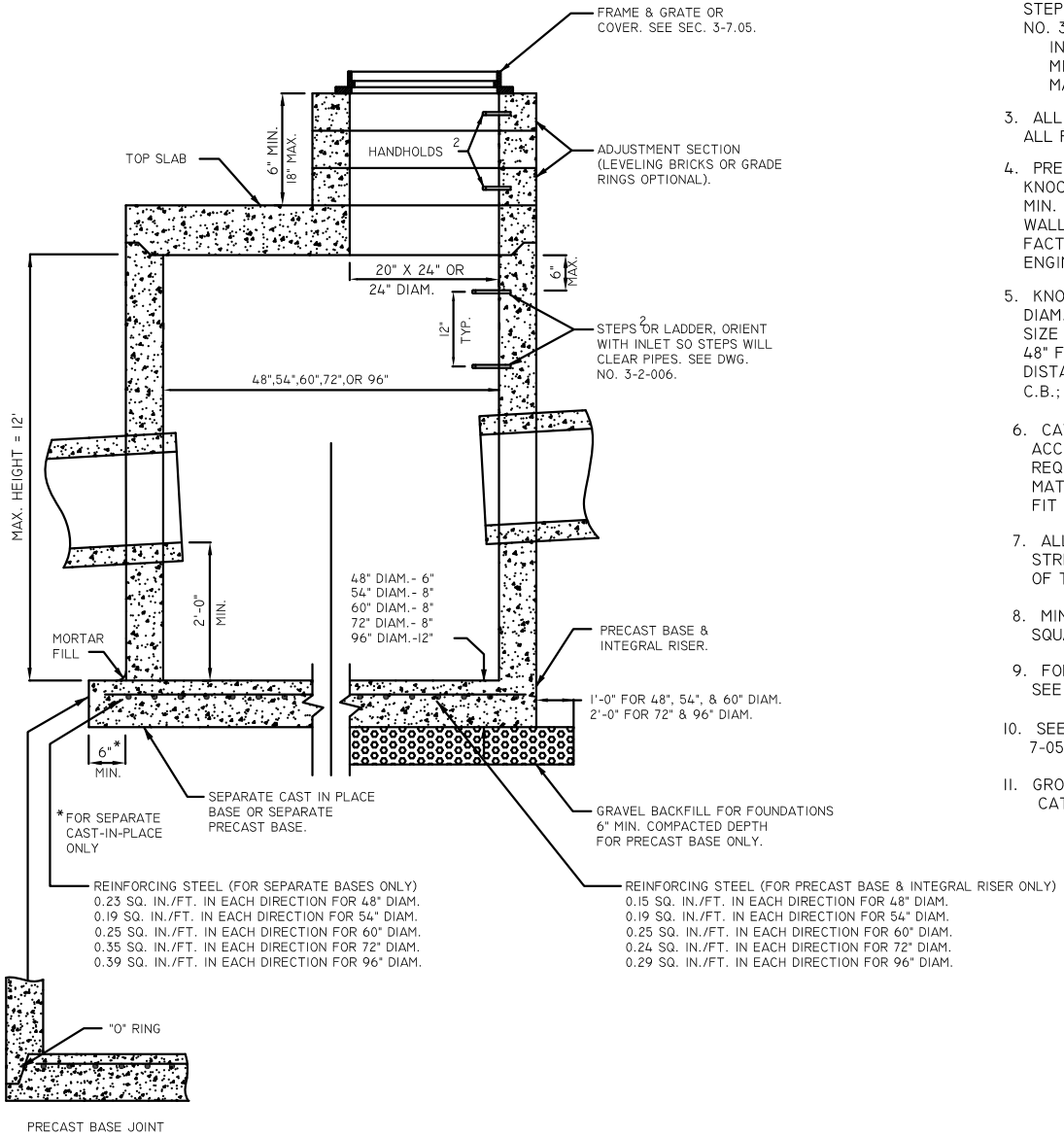

NOTES:

1. CATCH BASINS SHALL BE CONSTRUCTED IN ACCORDANCE WITH ASTM C478 (AASHTO M199) AND ASTM C890 UNLESS OTHERWISE SHOWN ON PLANS OR NOTED IN THE WSDOT/APWA STANDARD SPECIFICATIONS.

2. HANDHOLDS IN ADJUSTMENT SECTION SHALL HAVE 3" MIN. CLEARANCE. STEPS IN CATCH BASIN SHALL HAVE 6" MIN. CLEARANCE. SEE DWG. NO. 3-2-006, CATCH BASIN DETAILS. HANDHOLDS SHALL BE PLACED IN ALTERNATING GRADE RINGS OR LEVELING BRICK COURSE WITH A MIN. OF ONE HANDHOLD BETWEEN THE LAST STEP AND TOP OF THE MANHOLE.

3. ALL REINFORCED CAST-IN-PLACE CONCRETE SHALL BE CLASS 4000. ALL PRECAST CONCRETE SHALL BE CLASS 4000 (4000 PSI).

4. PRECAST BASES SHALL BE FURNISHED WITH CUTOUTS OR KNOCKOUTS. KNOCKOUTS SHALL HAVE WALL THICKNESS OF 2" MIN. UNUSED KNOCKOUTS NEED NOT BE GROUTED IF WALL IS LEFT INTACT. PIPES SHALL BE INSTALLED ONLY IN FACTORY KNOCKOUTS UNLESS OTHERWISE APPROVED BY THE ENGINEER.

5. KNOCKOUT OR CUTOUT HOLE SIZE SHALL EQUAL PIPE OUTER DIAM. PLUS CATCH BASIN WALL THICKNESS. MAX. HOLE SIZE SHALL BE 36" FOR 48" CATCH BASIN, 42" FOR 54" C.B., 48" FOR 60" C.B., 60" FOR 72" C.B., 84" FOR 96" C.B. MIN. DISTANCE BETWEEN HOLES SHALL BE 8" FOR 48", 54", AND 60" C.B.; 12" FOR 72" AND 96" C.B.

6. CATCH BASIN FRAMES AND GRATES OR COVERS SHALL BE IN ACCORDANCE WITH SEC. 3-7.05 AND MEET THE STRENGTH REQUIREMENTS OF FEDERAL SPECIFICATION RR-F-621D. MATING SURFACES SHALL BE FINISHED TO ASSURE NON-ROCKING FIT WITH ANY COVER POSITION.

7. ALL BASE REINFORCING STEEL SHALL HAVE A MIN. YIELD STRENGTH OF 60,000 PSI AND BE PLACED IN THE UPPER HALF OF THE BASE WITH 1" MIN. CLEARANCE.

8. MIN. SOIL BEARING VALUE SHALL EQUAL 3,300 POUNDS PER SQUARE FOOT.

9. FOR DETAILS SHOWING LADDER, STEPS, HANDRAILS AND TOP SLABS, SEE DWG. NO. 3-2-006.

10. SEE THE WSDOT/APWA STANDARD SPECIFICATIONS SEC. 7-05.3 FOR JOINT REQUIREMENTS.

11. GROUT IN BETWEEN (ALL CONTACT SURFACES) ALL RISERS AND CATCH BASIN WITH APPROVED GROUT.

City of Duvall

CATCH BASIN, TYPE II 48", 54", 72", 96"	REVISED 5/10/07
STANDARD PLAN	3-2-005

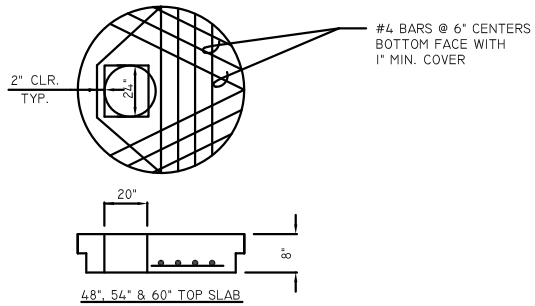

48", 54" & 60" TOP SLAB

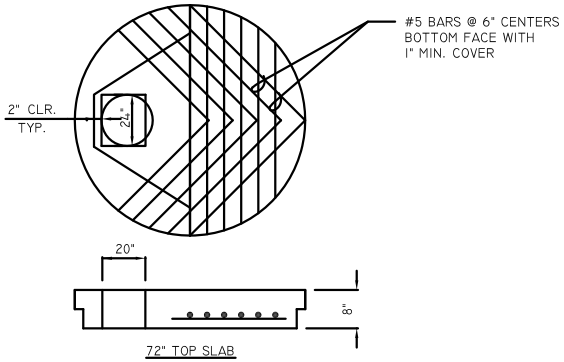

72" TOP SLAB

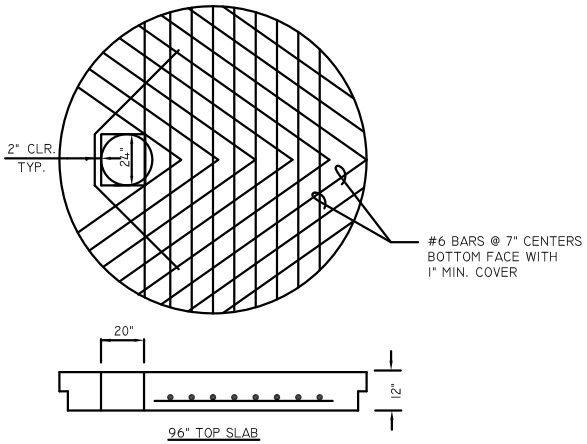

96" TOP SLAB

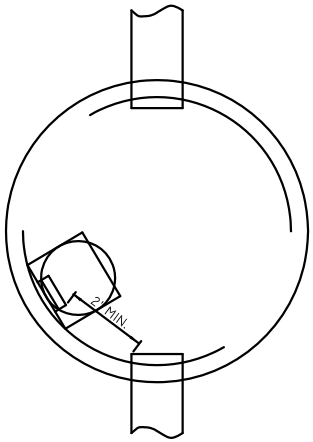

TYPICAL ORIENTATION
FOR ACCESS AND STEPS

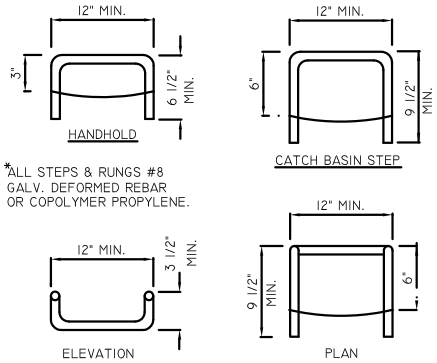

*ALL STEPS & RUNGS #8
GALV. DEFORMED REBAR
OR COPOLYMER PROPYLENE.

DROP RUNG
CATCH BASIN STEP

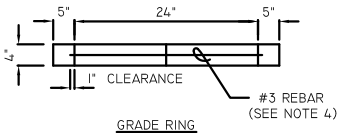

GRADE RING

NOTES:

1. PROPRIETARY CATCH BASIN HANDHOLDS AND STEPS ARE ACCEPTABLE, PROVIDED THAT THEY CONFORM TO SEC. R, ASTM C478, AASHTO M-199 AND MEET ALL WISHA REQUIREMENTS.

2. CATCH BASIN STEP/HANDHOLD LEGS SHALL BE PARALLEL OR APPROXIMATELY RADIAL AT THE OPTION OF THE MANUFACTURER, EXCEPT THAT ALL STEPS IN ANY CATCH BASIN SHALL BE SIMILAR. PENETRATION OF OUTER WALL BY A LEG IS PROHIBITED.

3. HANDHOLDS AND STEPS SHALL HAVE "DROP" RUNGS AS SHOWN ON DETAIL OR PROTUBERANCES TO PREVENT SIDEWAYS SLIP.

4. SLAB OPENING MAY BE 24" X 20" OR 24" DIAM.

5. AS AN ACCEPTABLE ALTERNATIVE TO REBAR, WELDED WIRE FABRIC HAVING A MIN. AREA OF 0.12 SQUARE INCHES PER FOOT MAY BE USED. WELDED WIRE FABRIC SHALL COMPLY TO ASTM A497.

6. LADDERS OR STEPS SHALL EXTEND TO WITHIN 16" OF BOTTOM OF CATCH BASIN.

7. HANGING LADDERS SHALL BE PERMANENTLY FASTENED AT TOP BY HANGING ON STEP OR BY BOLTING OR EMBEDDING IN CONCRETE. EACH SHALL BE EMBEDDED AT BOTTOM IN BASE.

8. ADDITIONAL SAFETY FEATURES MAY BE REQUIRED IN VERY DEEP OR UNUSUAL STRUCTURES.

PREFABRICATED LADDER

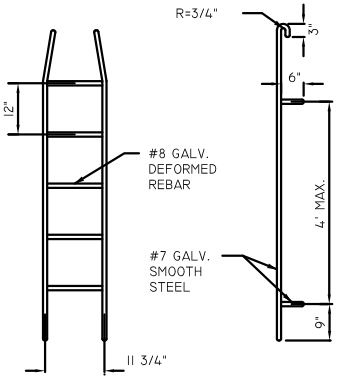

City of Duvall

CATCH BASIN DETAILS	REVISED 5/10/07
STANDARD PLAN	3-02-006

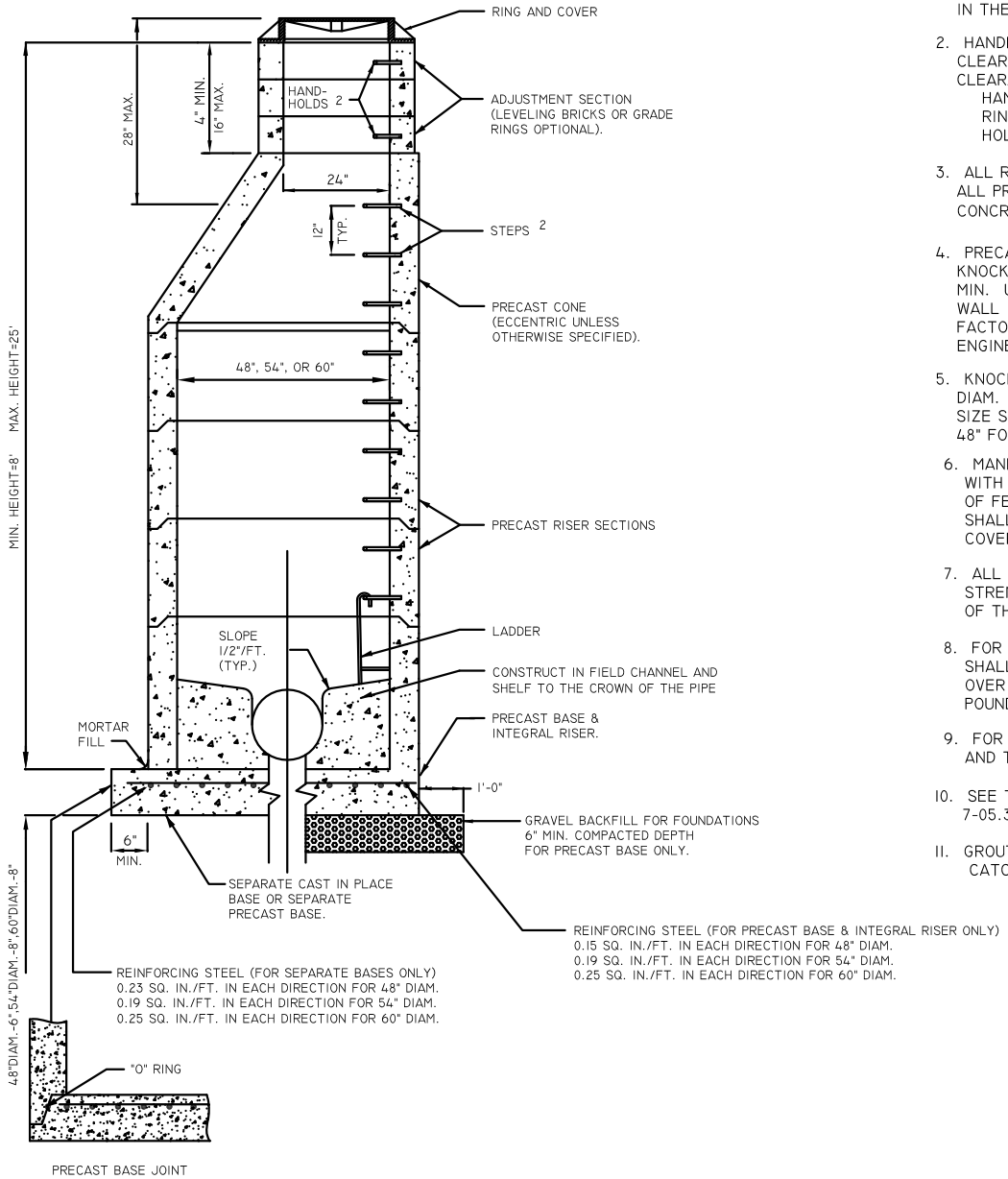

NOTES:

1. MANHOLES SHALL BE CONSTRUCTED IN ACCORDANCE WITH AASHTO M199 UNLESS OTHERWISE SHOWN ON PLANS OR NOTED IN THE WSDOT/APWA STANDARD SPECIFICATIONS.

2. HANDHOLDS IN ADJUSTMENT SECTION SHALL HAVE 3" MIN. CLEARANCE. STEPS IN MANHOLE SHALL HAVE 6" MIN. CLEARANCE. SEE DWG. NO. 3-2-011, "MANHOLE DETAILS." HANDHOLDS SHALL BE PLACED IN ALTERNATING GRADE RINGS OR LEVELING BRICK COURSE WITH A MIN. OF ONE HAND HOLD BETWEEN THE LAST STEP AND THE TOP OF THE MANHOLE.

3. ALL REINFORCED CAST-IN-PLACE CONCRETE SHALL BE CLASS 4000. ALL PRECAST CONCRETE SHALL BE CLASS 4000. NON-REINFORCED CONCRETE IN CHANNEL AND SHELF SHALL BE CLASS 3000.

4. PRECAST BASES SHALL BE FURNISHED WITH CUTOUTS OR KNOCKOUTS. KNOCKOUTS SHALL HAVE WALL THICKNESS OF 2" MIN. UNUSED KNOCKOUTS NEED NOT BE GROUTED IF WALL IS LEFT INTACT. PIPES SHALL BE INSTALLED ONLY IN FACTORY KNOCKOUTS UNLESS OTHERWISE APPROVED BY THE ENGINEER.

5. KNOCKOUT OR CUTOUT HOLE SIZE SHALL EQUAL PIPE OUTER DIAM. PLUS MANHOLE WALL THICKNESS. MAX. HOLE SIZE SHALL BE 36" FOR 48" MANHOLE, 42" FOR 54" MANHOLE, 48" FOR 60" M.H. MIN. DISTANCE BETWEEN HOLES SHALL BE 8".

6. MANHOLE RINGS AND COVERS SHALL BE IN ACCORDANCE WITH SEC. 3-7.05 AND MEET THE STRENGTH REQUIREMENTS OF FEDERAL SPECIFICATION RR-F-621D. MATING SURFACES SHALL BE FINISHED TO ASSURE NON-ROCKING FIT WITH ANY COVER POSITION.

7. ALL BASE REINFORCING STEEL SHALL HAVE A MIN. YIELD STRENGTH OF 60,000 PSI AND BE PLACED IN THE UPPER HALF OF THE BASE WITH 1" MIN. CLEARANCE.

8. FOR HEIGHTS OF 12' OR LESS, MIN. SOIL BEARING VALUE SHALL EQUAL 3,300 POUNDS PER SQUARE FOOT. FOR HEIGHTS OVER 12', MIN. SOIL BEARING VALUE SHALL EQUAL 3,800 POUNDS PER SQUARE FOOT.

9. FOR DETAILS SHOWING GRADE RING, LADDER, STEPS, HANDHOLDS, AND TOP SLABS, SEE DWG. NO. 3-2-011, "MANHOLE DETAILS."

10. SEE THE WSDOT/APWA STANDARD SPECIFICATIONS SEC. 7-05.3 FOR JOINT REQUIREMENTS.

11. GROUT IN BETWEEN (ALL CONTACT SURFACES) ALL RISERS AND CATCH BASIN WITH APPROVED GROUT.

City of Duvall

MANHOLE TYPE II 48", 54", 60"	REVISED 5/10/07
STANDARD PLAN	3-02-007

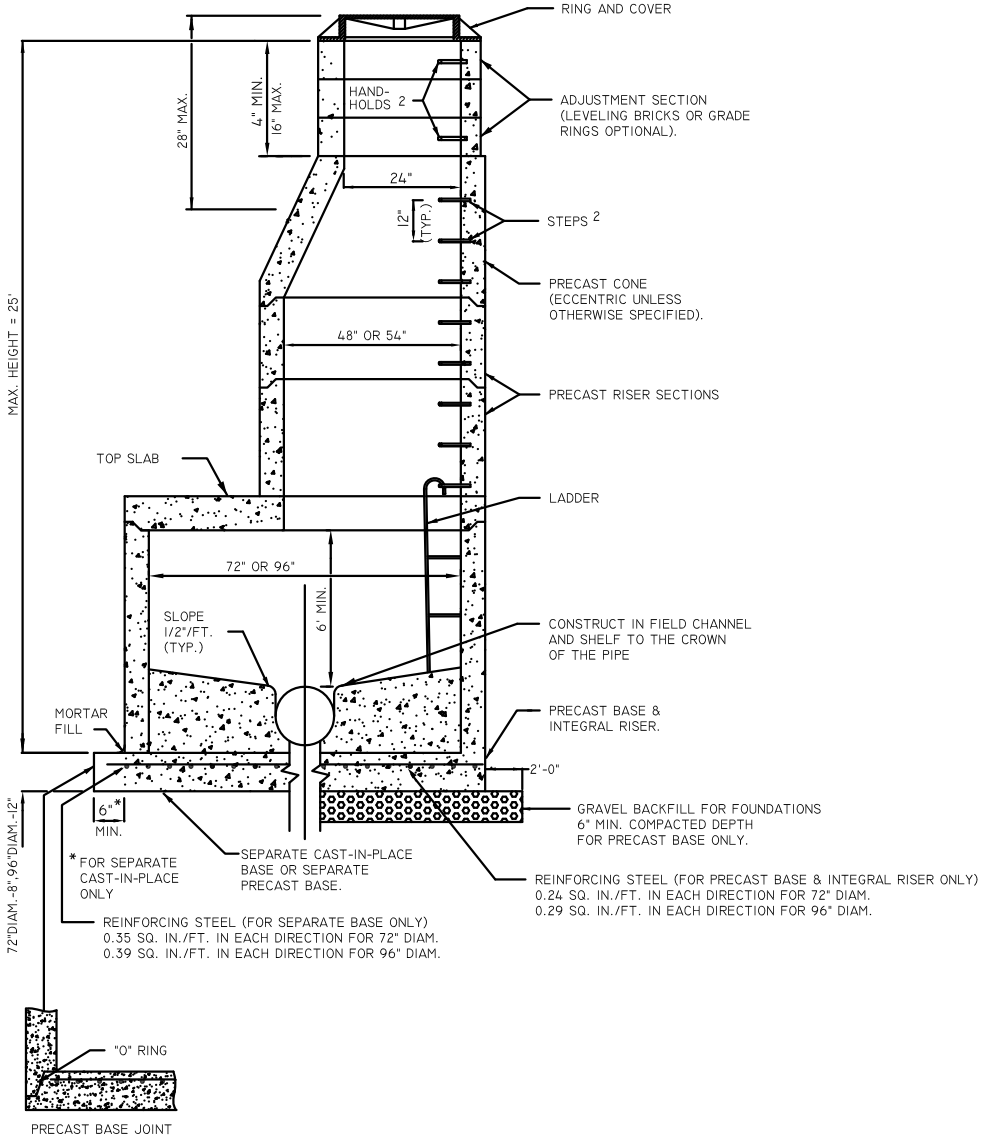

NOTES:

1. MANHOLES SHALL BE CONSTRUCTED IN ACCORDANCE WITH AASHTO M199 UNLESS OTHERWISE SHOWN ON PLANS OR NOTED IN THE WSDOT/APWA STANDARD SPECIFICATIONS.

2. HANDHOLDS IN ADJUSTMENT SECTION SHALL HAVE 3" MIN. CLEARANCE. STEPS IN MANHOLE SHALL HAVE 6" MIN. CLEARANCE. SEE DWG. NO. 3-2-011, "MANHOLE DETAILS."
   HANDHOLDS SHALL BE PLACED IN ALTERNATING GRADE RINGS OR LEVELING BRICK COURSE WITH MIN. OF ONE HANDHOLD BETWEEN THE LAST STEP AND THE TOP OF THE MANHOLE.

3. ALL REINFORCED CAST-IN-PLACE CONCRETE SHALL BE CLASS 4000. NON-REINFORCED CONCRETE IN CHANNEL AND SHELF SHALL BE CLASS 3000. ALL PRECAST CONCRETE SHALL BE CLASS 4000.

4. PRECAST BASES SHALL BE FURNISHED WITH CUTOUTS OR KNOCKOUTS. KNOCKOUTS SHALL HAVE WALL THICKNESS OF 2" MIN. UNUSED KNOCKOUTS NEED NOT BE GROUTED IF WALL IS LEFT INTACT. PIPES SHALL BE INSTALLED ONLY IN FACTORY KNOCKOUTS UNLESS OTHERWISE APPROVED BY THE ENGINEER.

5. KNOCKOUT OR CUTOUT HOLE SIZE SHALL EQUAL PIPE OUTER DIAM. PLUS MANHOLE WALL THICKNESS. MAX. HOLE SIZE SHALL BE 60" FOR 72" MANHOLE, 84" FOR 96" MANHOLE. MIN. DISTANCE BETWEEN HOLES SHALL BE 12".

6. MANHOLE RINGS AND COVERS SHALL BE IN ACCORDANCE WITH SEC. 3-7.05 AND MEET THE STRENGTH REQUIREMENTS OF FEDERAL SPECIFICATION RR-F-621D. MATING SURFACES SHALL BE FINISHED TO ASSURE NON-ROCKING FIT WITH ANY COVER POSITION.

7. ALL BASE REINFORCING STEEL SHALL HAVE A MIN. YIELD STRENGTH OF 60,000 PSI AND BE PLACED IN THE UPPER HALF OF THE BASE WITH 1" MIN. CLEARANCE.

8. FOR HEIGHTS OF 12' OR LESS, MIN. SOIL BEARING VALUE SHALL EQUAL 3,300 POUNDS PER SQUARE FOOT. FOR HEIGHTS OVER 12', MIN. SOIL BEARING VALUE SHALL EQUAL 3,800 POUNDS PER SQUARE FOOT.

9. FOR DETAILS SHOWING GRADE RING, LADDER, STEPS, HANDHOLDS, AND TOP SLABS, SEE DWG. NO. 3-2-011, "MANHOLE DETAILS."

10. SEE THE WSDOT/APWA STANDARD SPECIFICATIONS SEC. 7-05.3 FOR JOINT REQUIREMENTS.

11. GROUT IN BETWEEN (ALL CONTACT SURFACES) ALL RISERS AND CATCH BASIN WITH APPROVED GROUT.

City of Duvall

MANHOLE TYPE II 72" & 96"	REVISED 5/10/07
STANDARD PLAN	3-02-008

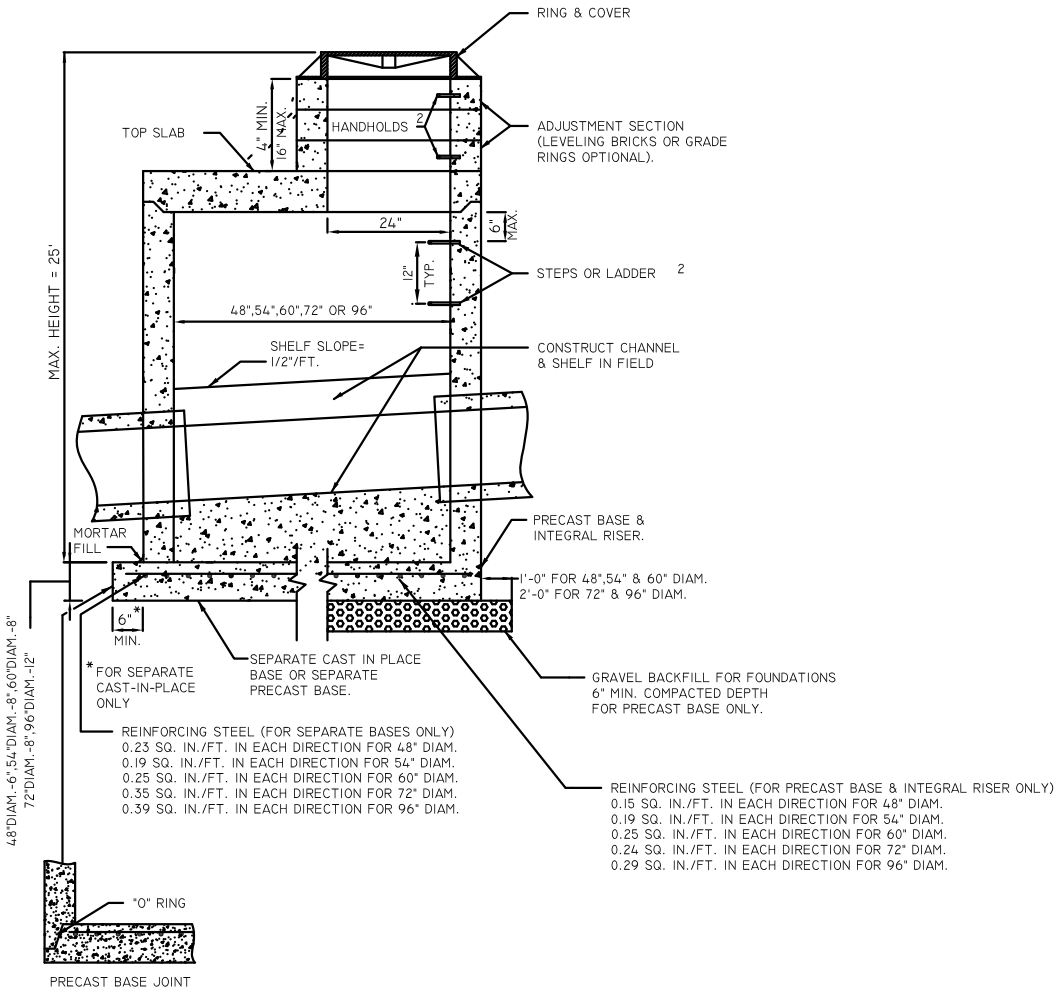

NOTES:

1. MANHOLES SHALL BE CONSTRUCTED IN ACCORDANCE WITH AASHTO M199 UNLESS OTHERWISE SHOWN ON PLANS OR NOTED IN THE WSDOT/APWA STANDARD SPECIFICATIONS.

2. HANDHOLDS IN ADJUSTMENT SECTION SHALL HAVE 3" MIN. CLEARANCE. STEPS IN MANHOLE SHALL HAVE 6" MIN. CLEARANCE. SEE DWG. NO. 3-2-011, "MANHOLE DETAILS." HANDHOLDS SHALL BE PLACED IN ALTERNATING GRADE RINGS OR LEVELING BRICK COURSE WITH A MIN. OF ONE HANDHOLD BETWEEN THE LAST STEP AND THE TOP OF THE MANHOLE.

3. ALL REINFORCED CAST-IN-PLACE CONCRETE SHALL BE CLASS 4000. NON-REINFORCED CONCRETE IN CHANNEL AND SHELF SHALL BE CLASS 3000. ALL PRECAST CONCRETE SHALL BE CLASS 4000.

4. PRECAST BASES SHALL BE FURNISHED WITH CUTOUTS OR KNOCKOUTS. KNOCKOUTS SHALL HAVE WALL THICKNESS OF 2" MIN. UNUSED KNOCKOUTS NEED NOT BE GROUTED IF WALL IS LEFT INTACT. PIPES SHALL BE INSTALLED ONLY IN FACTORY KNOCKOUTS UNLESS OTHERWISE APPROVED BY THE ENGINEER.

5. KNOCKOUT OR CUTOUT HOLE SIZE SHALL EQUAL PIPE OUTER DIAM. PLUS MANHOLE WALL THICKNESS. MAX. HOLE SIZE SHALL BE 36" FOR 48" M.H., 42" FOR 54" M.H., 48" FOR 60" M.H., 60" FOR 72" M.H., 84" FOR 96" M.H. MIN. DISTANCE BETWEEN HOLES SHALL BE 8" FOR 48", 54", AND 60" M.H., 12" FOR 72" AND 96" M.H.

6. MANHOLE RINGS AND COVERS SHALL BE IN ACCORDANCE WITH SEC. 3-7.05 AND MEET THE STRENGTH REQUIREMENTS OF FEDERAL SPECIFICATION RR-F-621D. MATING SURFACES SHALL BE FINISHED TO ASSURE NON-ROCKING FIT WITH ANY COVER POSITION.

7. ALL BASE REINFORCING STEEL SHALL HAVE A MIN. YIELD STRENGTH OF 60,000 PSI AND BE PLACED IN THE UPPER HALF OF THE BASE WITH 1" MIN. CLEARANCE.

8. FOR HEIGHTS OF 12' OR LESS, MIN. SOIL BEARING VALUE SHALL EQUAL 3,300 POUNDS PER SQUARE FOOT. FOR HEIGHTS OVER 12', MIN. SOIL BEARING VALUE SHALL EQUAL 3,800 POUNDS PER SQUARE FOOT.

9. FOR DETAILS SHOWING GRADE RING, LADDER, STEPS, HANDHOLDS, AND TOP SLABS, SEE DWG. NO. 3-2-011, "MANHOLE DETAILS."

10. SEE THE WSDOT/APWA STANDARD SPECIFICATIONS SEC. 7-05.3 FOR JOINT REQUIREMENTS.

11. GROUT IN BETWEEN (ALL CONTACT SURFACES) ALL RISERS AND CATCH BASIN WITH APPROVED GROUT.

City of Duvall

MANHOLE TYPE 3 48", 54", 60", 72" & 96"	REVISED 5/10/07
STANDARD PLAN	3-02-009

NOTES:

1. MANHOLES SHALL BE CONSTRUCTED IN ACCORDANCE WITH AASHTO M199 UNLESS OTHERWISE SHOWN ON PLANS OR NOTED IN THE WSDOT/APWA STANDARD SPECIFICATIONS.
2. HANDHOLDS IN ADJUSTMENT SECTION SHALL HAVE 3" MIN. CLEARANCE. STEPS IN MANHOLE SHALL HAVE 6" MIN. CLEARANCE. SEE DWG. NO. 3-2-011, "MANHOLE DETAILS."
3. MANHOLE RINGS AND COVERS SHALL BE IN ACCORDANCE WITH SEC. 3-7.05 AND MEET THE STRENGTH REQUIREMENTS OF FEDERAL SPECIFICATION RR-F-621D. MATING SURFACES SHALL BE FINISHED TO ASSURE NON-ROCKING FIT WITH ANY COVER POSITION.
4. ALL PRECAST CONCRETE SHALL BE CLASS 4000.
5. FOR DETAILS SHOWING GRADE RING, LADDER, STEPS, HANDHOLDS, AND TOP SLABS, SEE DWG. NO. 3-2-011, "MANHOLE DETAILS".
6. NOT FOR USE IN TRAFFIC BEARING AREAS.

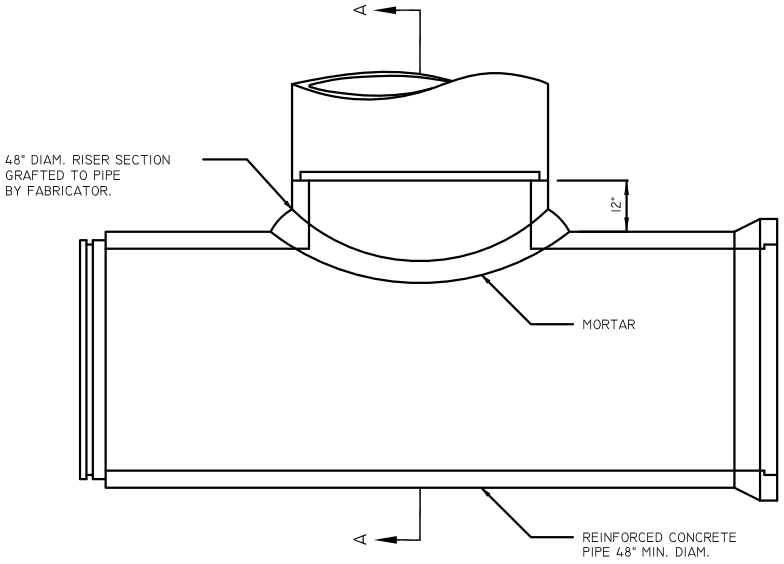

ELEVATION

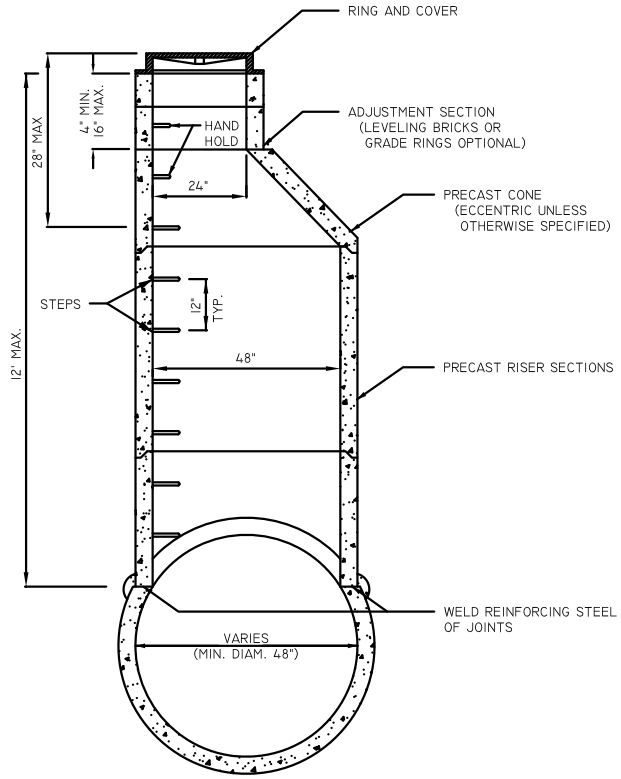

SECTION A-A

City of Duvall

MANHOLE TYPE 4	REVISED 5/10/07
STANDARD PLAN	3-02-010

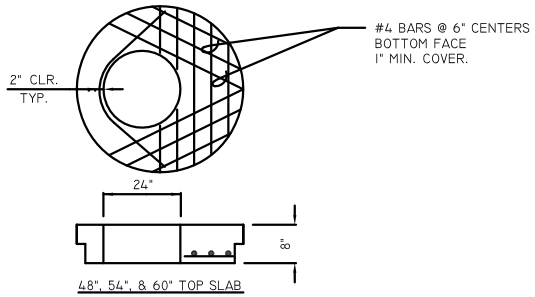

48", 54", & 60" TOP SLAB

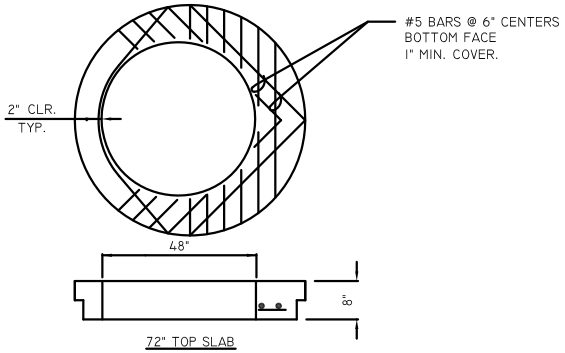

72" TOP SLAB

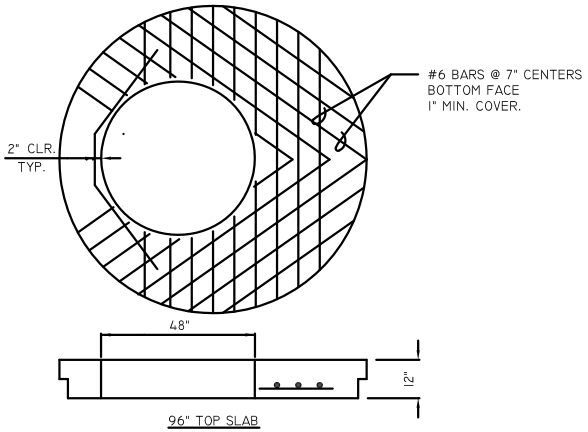

96" TOP SLAB

*ALL STEPS & RUNGS
1" DIAM. GALV. REBAR OR
COPOLYMER PROPYLENE.

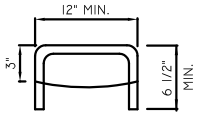

HANDHOLD

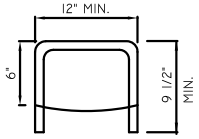

MANHOLE STEP

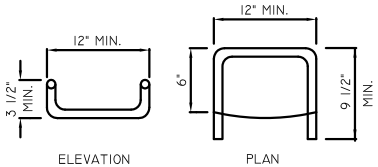

MANHOLE DROP RUNG STEP

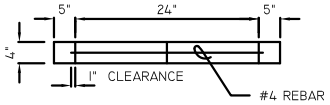

GRADE RING

NOTES:

1. PROPRIETARY MANHOLE HANDHOLDS AND STEPS ARE ACCEPTABLE, PROVIDED THAT THEY CONFORM TO SEC. R, ASTM C478, AASHTO M199 AND MEET ALL WISHA REQUIREMENTS.
2. MANHOLE STEP/HANDHOLD LEGS SHALL BE PARALLEL OR APPROXIMATELY RADIAL AT THE OPTION OF THE MANUFACTURER, EXCEPT THAT ALL STEPS IN ANY MANHOLE SHALL BE SIMILAR. PENETRATION OF OUTER WALL BY A LEG IS PROHIBITED.
3. HANDHOLDS AND STOPS SHALL HAVE "DROP" RUNGS OR PROTUBERANCES TO PREVENT SIDEWAYS SLIP.
4. LADDERS OR STEPS SHALL EXTEND TO WITHIN 16" OF BOTTOM OF MANHOLE.
5. HANGING LADDERS SHALL BE PERMANENTLY FASTENED AT TOP BY HANGING ON STEP OR BY BOLTING OR EMBEDDING IN CONCRETE. EACH SHALL BE EMBEDDED AT BOTTOM IN BASE.
6. ADDITIONAL SAFETY FEATURES MAY BE REQUIRED IN VERY DEEP OR UNUSUAL STRUCTURES.

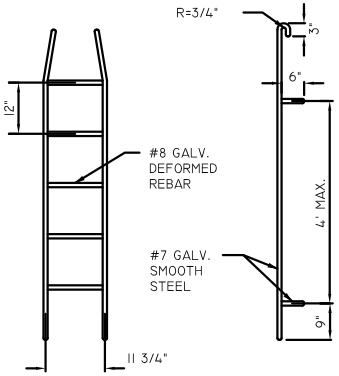

PREFABRICATED LADDER

City of Duvall

MANHOLE DETAILS	REVISED 5/10/07
STANDARD PLAN	3-02-011

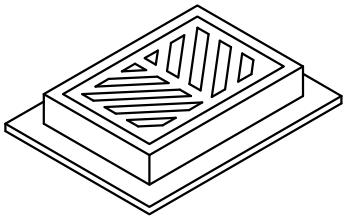

FRAME AND GRATE
SEE SEC. 3-7.05 AND
APPLICABLE DWGS.

*GRATE TYPE SHALL
BE DETERMINED BY CITY ENGINEER

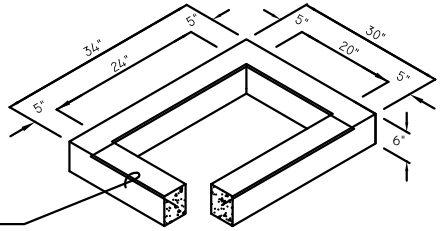

6" RISER SECTION

1 #3 BAR HOOP

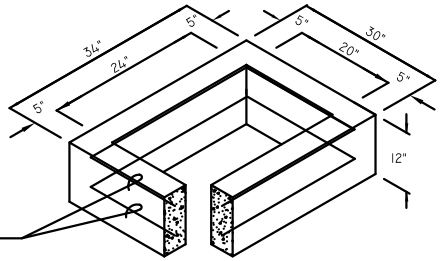

12" RISER SECTION

2 #3 BAR HOOPS

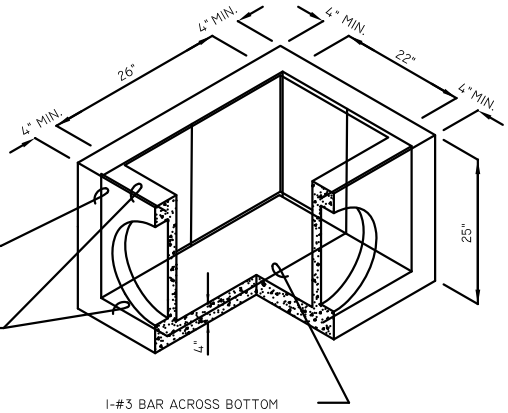

PRECAST BASE SECTION
(MEASUREMENT AT THE TOP
OF THE BASE)

#3 BAR EACH CORNER

#3 BAR EACH SIDE
TOP & BOTTOM

1-#3 BAR ACROSS BOTTOM

NOTES:

1. CURB INLET TO BE CONSTRUCTED IN ACCORDANCE WITH ASTM C478 & C890 UNLESS OTHERWISE SHOWN ON PLANS OR NOTED IN THE STANDARD SPECIFICATIONS.
2. AS AN ACCEPTABLE ALTERNATIVE TO REBAR, WELDED WIRE FABRIC HAVING A MIN. AREA OF 0.12 SQUARE INCHES PER FOOT MAY BE USED. WELDED WIRE FABRIC SHALL COMPLY TO ASTM A497. WIRE FABRIC SHALL NOT BE PLACED IN KNOCKOUTS.
3. ALL REINFORCED CAST-IN-PLACE CONCRETE SHALL BE CLASS 4000.
4. PRECAST BASES SHALL BE FURNISHED WITH CUTOUTS OR KNOCKOUTS. KNOCKOUTS SHALL HAVE A WALL THICKNESS OF 2" MIN. ALL PIPE SHALL BE INSTALLED IN FACTORY PROVIDED KNOCKOUTS. UNUSED KNOCKOUTS NEED NOT BE GROUTED IF WALL IS LEFT INTACT.
5. KNOCKOUT OR CUTOUT HOLE SIZE IS EQUAL TO PIPE OUTER DIAM. PLUS CURB INLET WALL THICKNESS.
6. ROUND KNOCKOUTS MAY BE ON ALL 4 SIDES WITH MAX. DIAM. OF 17".
7. THE MAX. DEPTH FROM THE FINISHED GRADE TO THE PIPE INVERT IS 5'-0".
8. THE TAPER ON THE SIDES OF THE PRECAST BASE SECTION AND RISER SECTION SHALL NOT EXCEED 1/2"/FT.
9. CONCRETE INLET FRAME AND GRATES SHALL BE IN ACCORDANCE WITH STANDARD SPECIFICATIONS AND MEET THE STRENGTH REQUIREMENTS OF FEDERAL SPECIFICATION RR-F-621D. MATING SURFACES SHALL BE FINISHED TO ASSURE NON-ROCKING FIT WITH ANY OTHER COVER POSITION.
10. FRAME AND GRATE MAY BE INSTALLED WITH FLANGE DOWN OR CAST INTO RISER.
11. GROUT IN BETWEEN (ALL CONTACT SURFACES) ALL RISERS AND CATCH BASIN WITH APPROVED GROUT.

City of Duvall

CURB INLET	REVISED 5/10/07
STANDARD PLAN	3-02-012

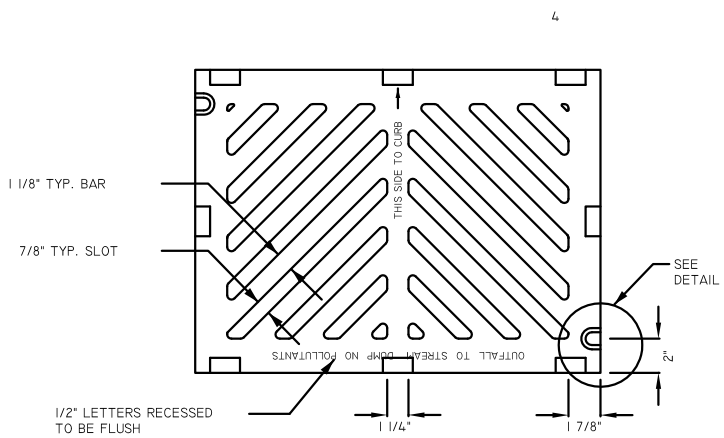

TOP VIEW

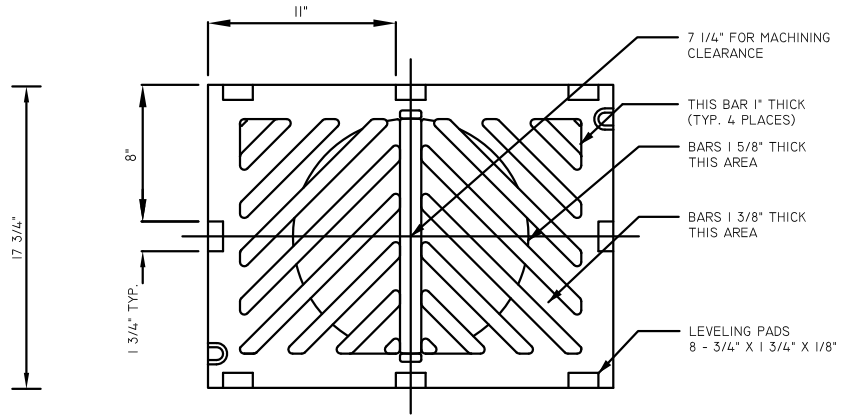

BOTTOM VIEW

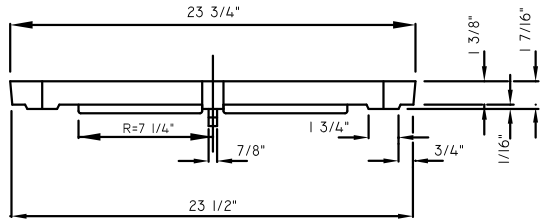

SIDE VIEW

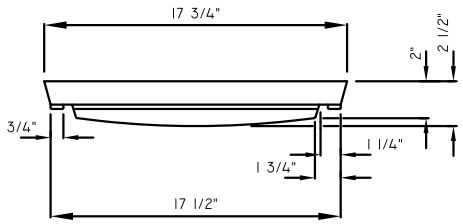

END VIEW

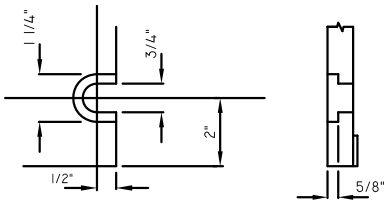

SLOT DETAIL

SEE NOTE 1

NOTES:

1. SLOT FORMED AND RECESSED FOR 5/8"-11 NC X 2" SOCKET HEAD (ALLEN HEAD) CAP SCREW.
2. GRATE SHALL BE CAST IRON PER ASTM A48 CLASS 35 UNLESS OTHERWISE SPECIFIED.
3. SEE SEC. 3-7.05.
4. GRATES AND FRAMES SHALL BE MANUFACTURED IN THE UNITED STATES OF AMERICA.
5. EAST JORDAN IRON WORKS MANUFACTURING CO. PRODUCT NO. 00770072 OR OTHERWISE APPROVED EQUAL.

City of Duvall

STANDARD GRATE	REVISED 5/10/07
STANDARD PLAN	3-02-013

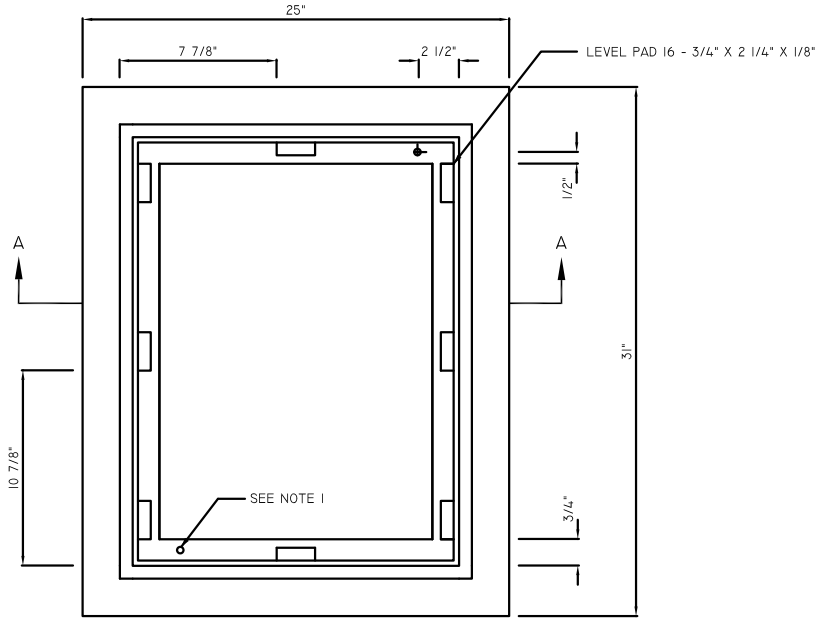

PLAN

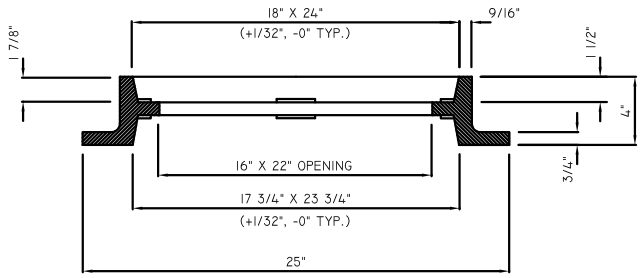

SECTION A-A

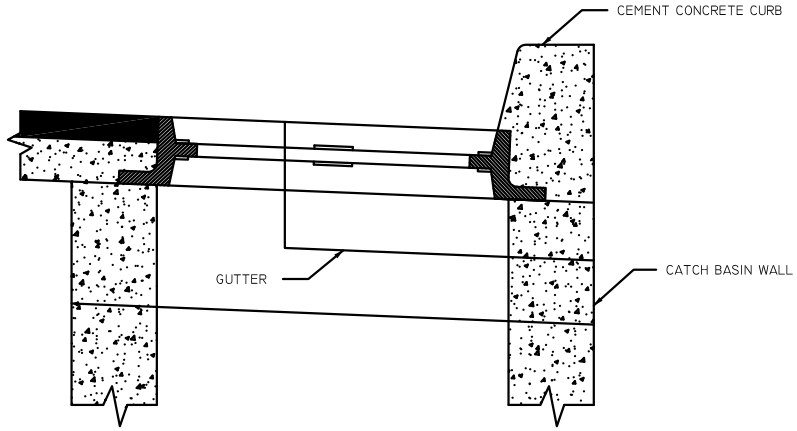

VERTICAL CURB

SEE NOTE 4

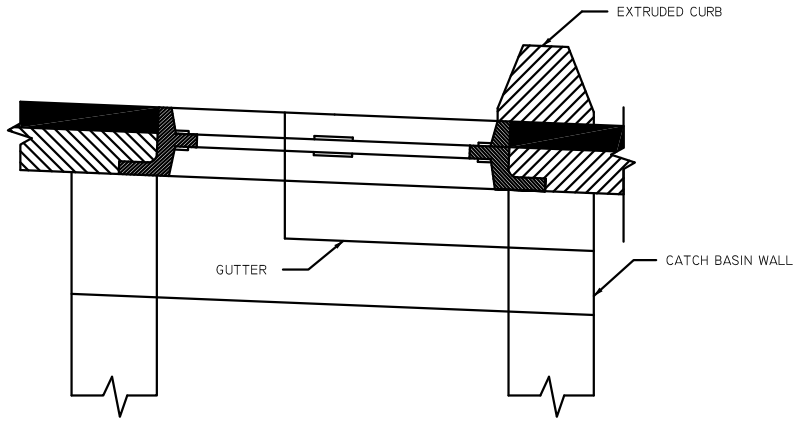

EXTRUDED CURB

SEE NOTE 4

NOTES:

1. DRILL AND TAP FOR, AND PROVIDE, TWO LOCKING BOLTS 5/8"-11 NC STAINLESS TYPE 304 STEEL SOCKET HEAD (ALLEN HEAD) CAP SCREWS 2" LONG WHEN USED WITH SOLID COVER (DWG. NO. 3-2-015) OR WHEN SPECIFIED BY ENGINEER.
2. FRAME MATERIAL IS CAST IRON PER ASTM A48 CLASS 35.
3. SET FRAME TO GRADE AND CONSTRUCT ROAD AND GUTTER TO BE FLUSH WITH FRAME.
4. SEE SEC. 3-7.05.
5. GRATES AND FRAMES SHALL BE MANUFACTURED IN THE UNITED STATES OF AMERICA.
6. EAST JORDAN IRON WORKS MANUFACTURING CO. PRODUCT NO. 00770072 OR OTHERWISE APPROVED EQUAL.

City of Duvall

STANDARD FRAME W/ VERTICAL OR EXTRUDED CURB INSTALLATION	REVISED 5/10/07
STANDARD PLAN	3-02-014

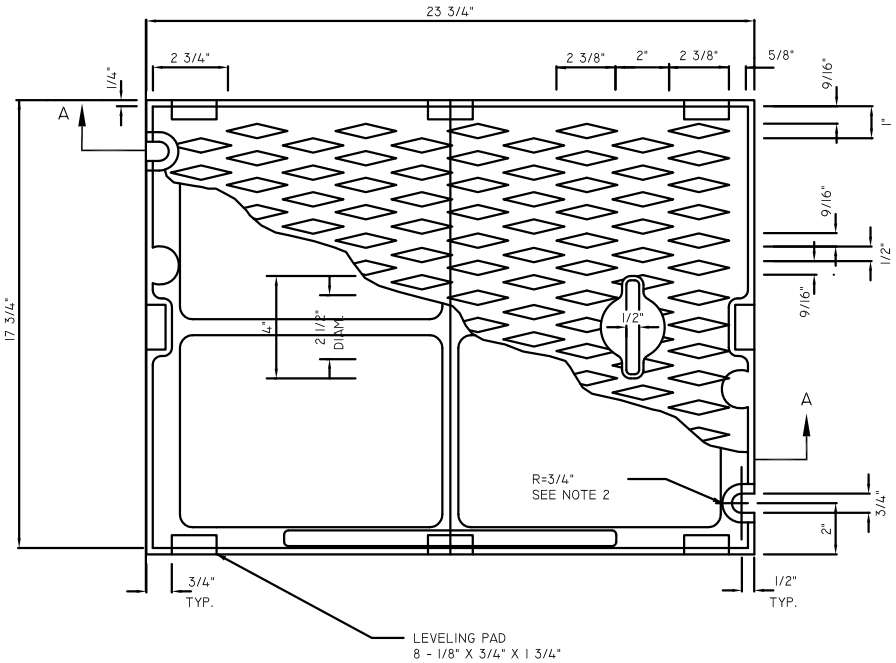

PLAN COVER

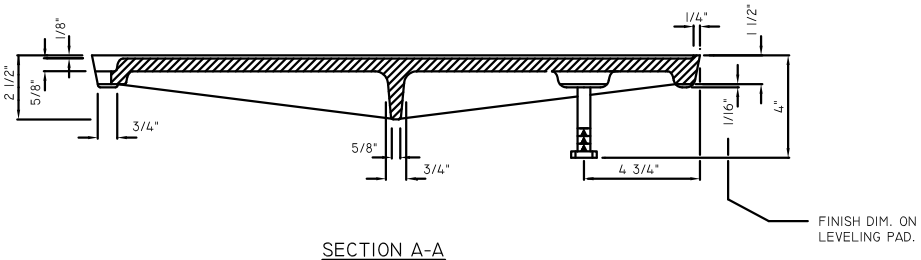

SECTION A-A

NOTES:

1. USE WITH FRAME (DWG. NO. 3-2-014) DRILLED AND TAPPED FOR LOCKING BOLTS.
2. USE WITH TWO LOCKING BOLTS 5/8"-11 NC STAINLESS STEEL TYPE 304 STEEL SOCKET HEAD (ALLEN HEAD) CAP SCREWS, 2" LONG.
3. MATERIAL IS CAST IRON PER ASTM A48 CLASS 35.
4. SEE SEC. 3-7.05.
5. GRATES AND FRAMES SHALL BE MANUFACTURED IN THE UNITED STATES OF AMERICA.
6. EAST JORDAN IRON WORKS MANUFACTURING CO. PRODUCT NO. 00770070 OR OTHERWISE APPROVED EQUAL.

City of Duvall

SOLID COVER	REVISED 5/10/07
STANDARD PLAN	3-02-015

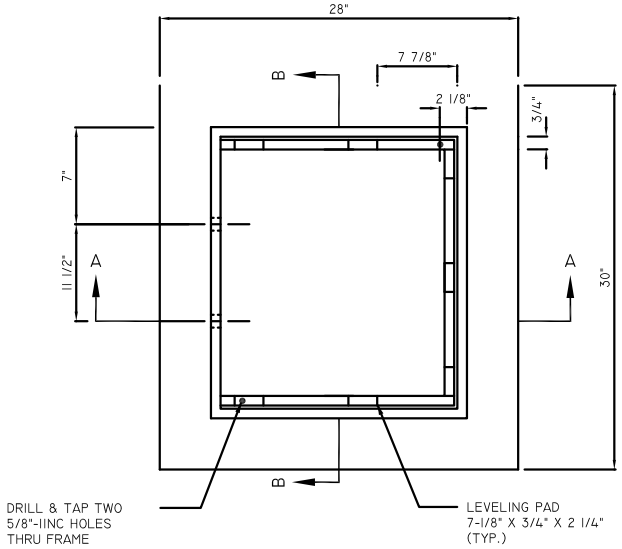

PLAN

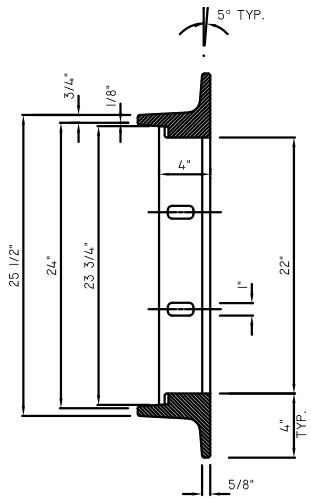

SECTION B-B

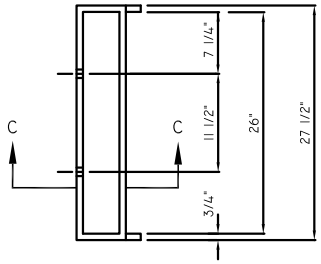

HOOD DETAIL

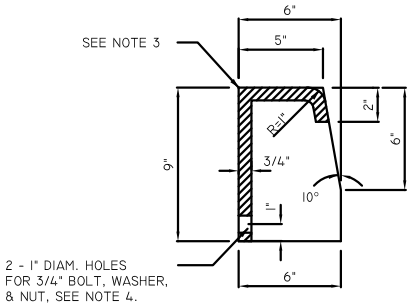

SECTION C-C

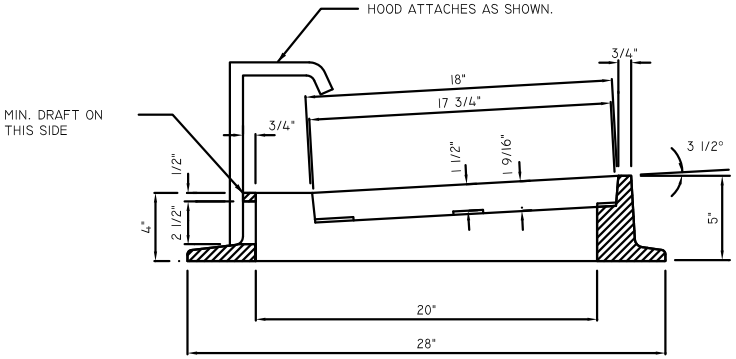

SECTION A-A

NOTES:

1. MATERIAL IS CAST IRON ASTM A48 CLASS 35.
2. SEE DWG. NO. 3-2-018 FOR VANED GRATE.
3. PATTERN ON TOP SURFACE OF HOOD SHALL BE 3/16" NON-SKID DIAMOND.
4. BOLT, WASHER, AND NUT SHALL BE GALV. OR CORROSION RESISTANT.
5. SEE SEC. 3-7.05.
6. GRATES AND FRAMES SHALL BE MANUFACTURED IN THE UNITED STATES OF AMERICA.
7. EAST JORDAN IRON WORKS MANUFACTURING CO. PRODUCT NO. 00770168 AND NO. 00770178 OR OTHERWISE APPROVED EQUAL.

City of Duvall

THROUGH CURB INLET FRAME	REVISED 5/10/07
STANDARD PLAN	3-02-016

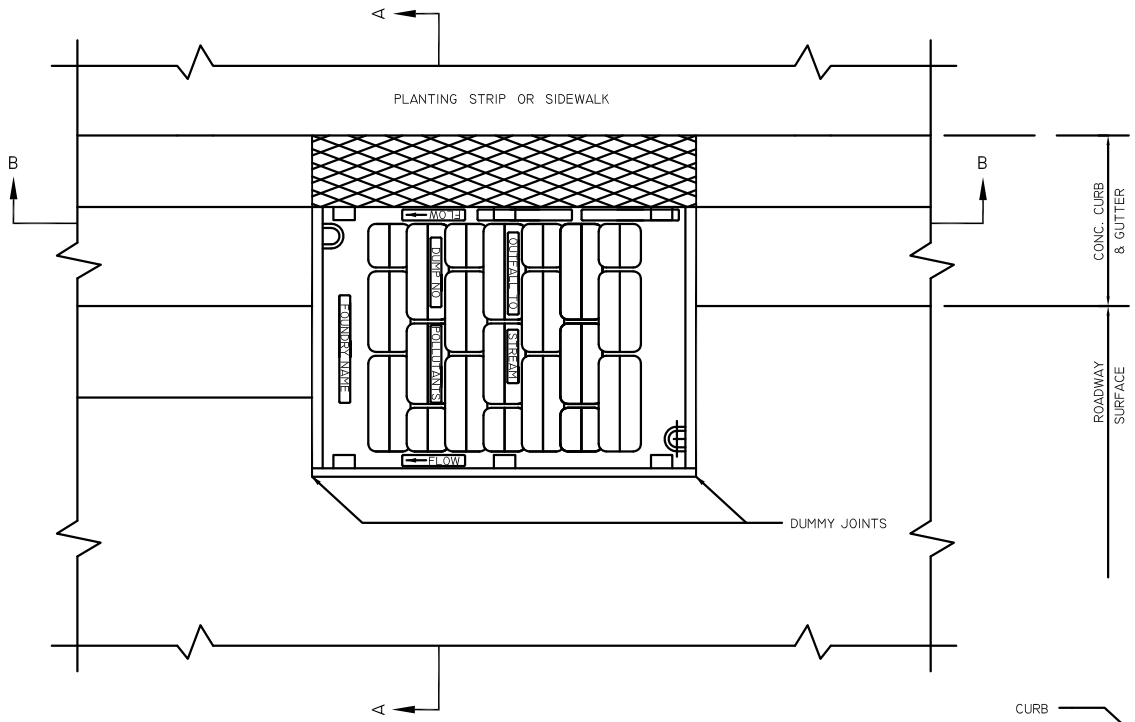

PLAN

USE THIS GRATE AS STANDARD FOR ALL INLETS ON ROADS WITH SLOPE OF 5% OR GREATER UNLESS OTHERWISE DIRECTED BY CITY ENGINEER

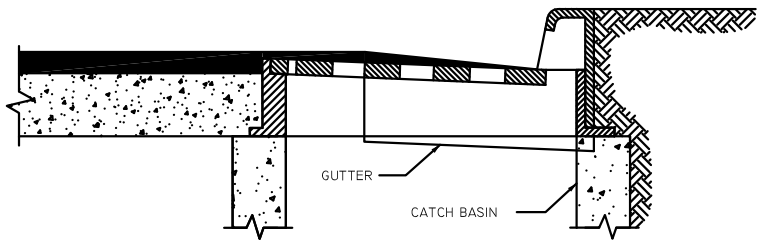

SECTION A-A

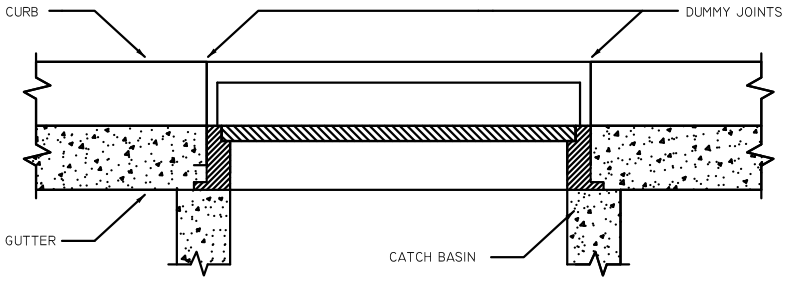

SECTION B-B

NOTES:

1. SET TO GRADE AND CONSTRUCT ROAD AND GUTTER TO BE FLUSH WITH FRAME.
2. SEE SEC. 3-3.04 FOR JOINT REQUIREMENTS.
3. GRATES AND FRAMES SHALL BE MANUFACTURED IN THE UNITED STATES OF AMERICA.
4. EAST JORDAN IRON WORKS MANUFACTURING CO. PRODUCT NO. 00770168 AND NO 00770178 OR OTHERWISE APPROVED EQUAL.

City of Duvall

THRU CURB INLET FRAME & GRATE W/ VERTICAL CURB INSTALLATION	REVISED 5/10/07
STANDARD PLAN	3-02-017

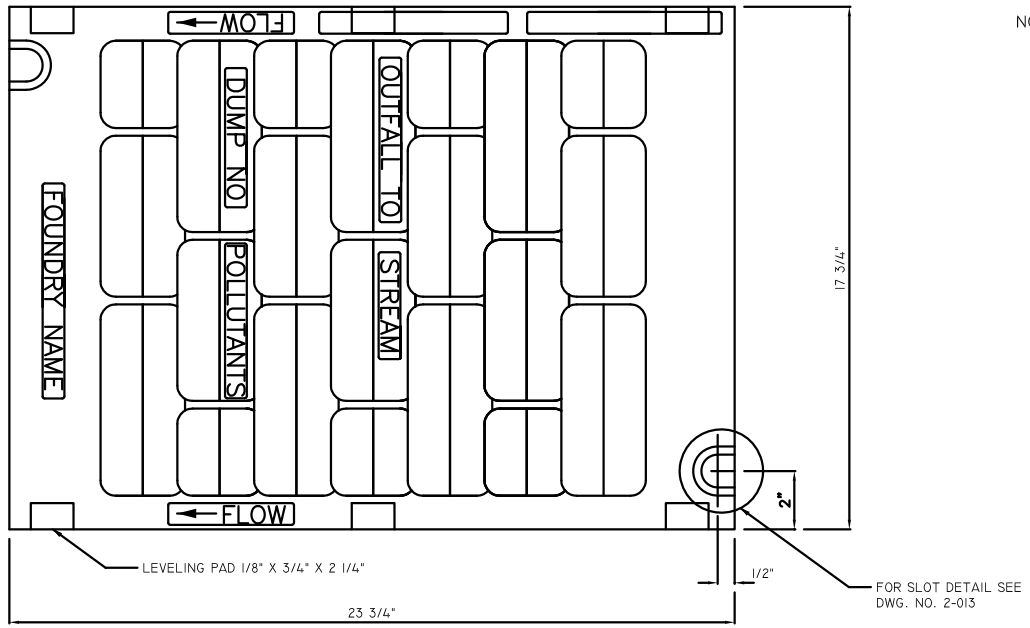

PLAN

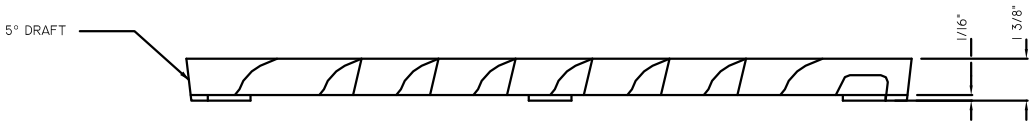

ELEVATION

NOTES:

1. SELF-LOCK VANED GRATE MANUFACTURER SUBJECT TO APPROVAL BY ENGINEER.
2. USE WITH TWO LOCKING BOLTS 5/8"-11 NC STAINLESS TYPE 304 STEEL SOCKET HEAD (ALLEN HEAD) CAP SCREWS 2" LONG. NOTE SLOT DETAIL.
3. MATERIAL IS DUCTILE IRON ASTM A536 GRADE 80-55-06.
4. "OUTFALL TO STREAM DUMP NO POLLUTANTS" MAY BE LOCATED ON BORDER AREA.
5. SEE SEC. 3-7.05.
6. VANED GRATE REQUIRED ON STREETS WHERE ROADWAY SLOPE IS GREATER THAN 5%.
7. GRATES AND FRAMES SHALL BE MANUFACTURED IN THE UNITED STATES OF AMERICA.
8. EAST JORDAN IRON WORKS MANUFACTURING CO. PRODUCT NO. 00770178 OR OTHERWISE APPROVED EQUAL.

City of Duvall

VANED GRATE	REVISED 5/10/07
STANDARD PLAN	3-02-018

City of Duvall

INTENTIONALLY LEFT VACANT	REVISED 5/10/07
STANDARD PLAN	3-02-019

City of Duvall

INTENTIONALLY LEFT VACANT	REVISED 5/10/07
STANDARD PLAN	3-02-020

City of Duvall

INTENIONALLY LEFT VACANT	REVISED 5/10/07
STANDARD PLAN	3-02-021

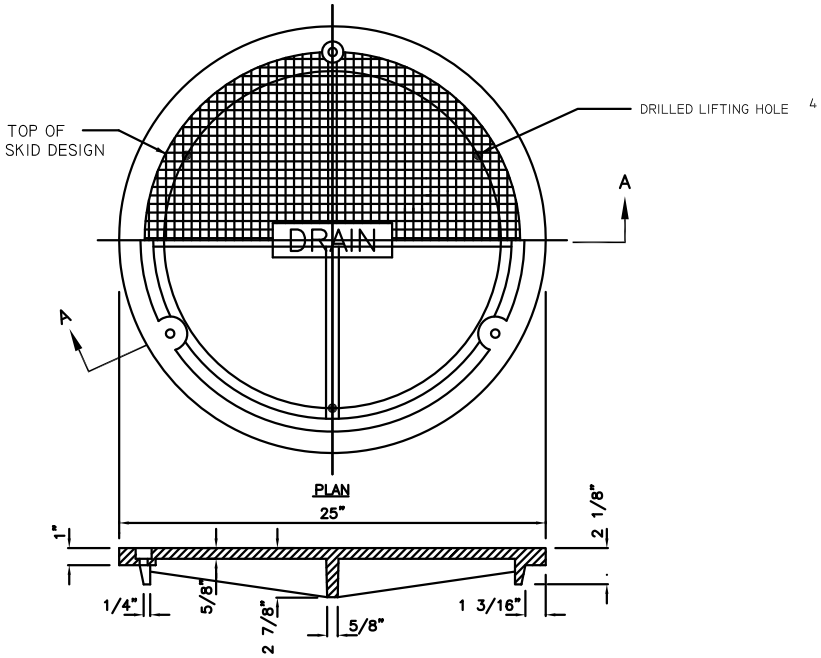

SECTION A-A

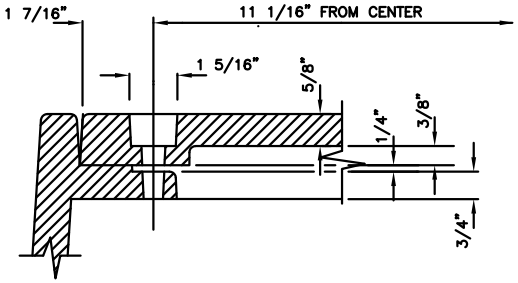

BOLT-DOWN DETAIL

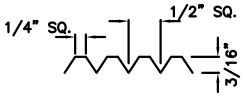

COVER SKID DESIGN DETAIL

NOTES:

1. USE WITH THREE LOCKING BOLTS 5/8"-11 NC STAINLESS TYPE 304 STEEL SOCKET HEAD (ALLEN HEAD) CAP SCREWS 2" LONG. DRILL HOLES SPACED 120° AT 11 1/16" RADIUS.
2. MATERIAL IS DUCTILE IRON ASTM A536 GRADE 80-55-06
3. SEE SEC. 3-7.05.
4. DRILL THREE 1 INCH HOLES SPACED AT 120° AND 9 1/2" RADIUS.
5. THE CITY ENGINEER MAY REQUIRE A NON-LOCKING STYLE COVER, IF SO IT SHALL BE EAST JORDAN IRON WORKS 370568 OR APPROVED EQUIVALENT.
6. COVER AND FRAME SHALL BE MANUFACTURED IN THE UNITED STATES OF AMERICA.
7. EAST JORDAN IRON WORKS MANUFACTURING CO. PRODUCT NO. 00371570 OR OTHERWISE APPROVED EQUAL.

City of Duvall

LOCKING MANHOLE COVER	REVISED 5/10/07
STANDARD PLAN	3-02-022

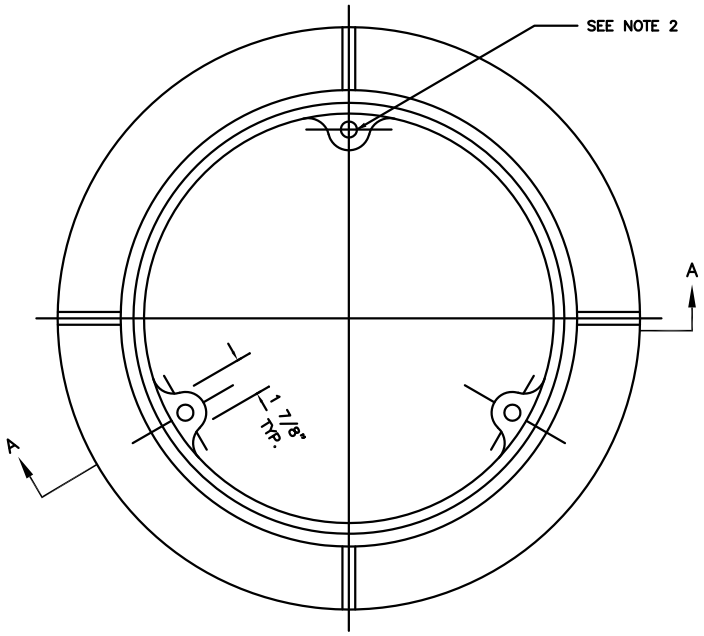

PLAN

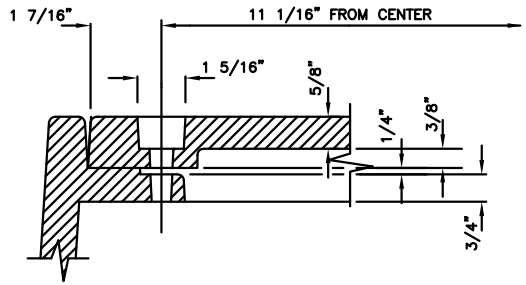

BOLT-DOWN DETAIL

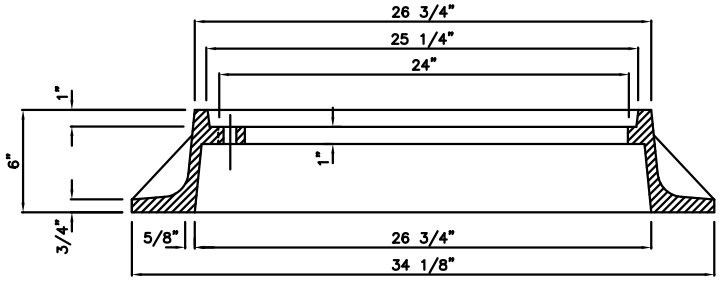

SECTION A-A

NOTES:

1. MATERIAL IS CAST IRON ASTM A48 CLASS 30.
2. DRILL AND TAP THREE 5/8"-11 NC HOLES THROUGH FRAME AT 120° AND 11 1/16" RADIUS.
3. SEE SEC. 3-7.05.
4. COVER AND FRAME SHALL BE MANUFACTURED IN THE UNITED STATES OF AMERICA.
5. EAST JORDAN IRON WORKS MANUFACTURING CO. PRODUCT NO. 00371512 OR OTHERWISE APPROVED EQUAL.

City of Duvall

LOCKING MANHOLE FRAME	REVISED 5/10/07
STANDARD PLAN	3-02-023

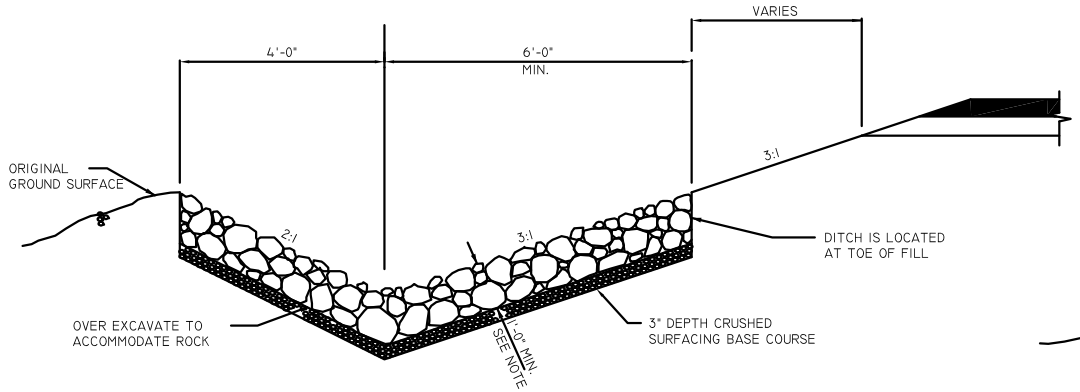

ROCK-LINED SHOULDER DITCH
IN FILL SECTION

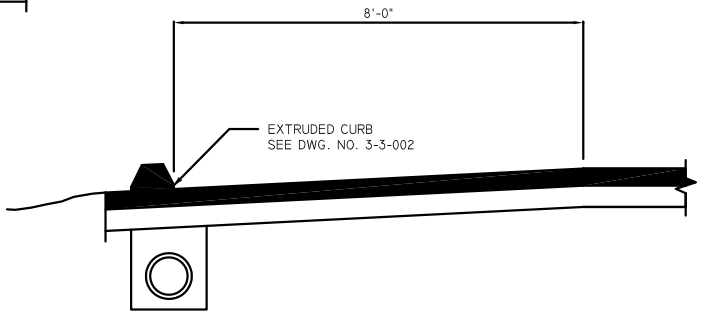

CURBED SHOULDER

NOTES:

1. DEEPER ROCK FILL MAY BE SPECIFIED.
2. SEE SEC. 3-7.02.

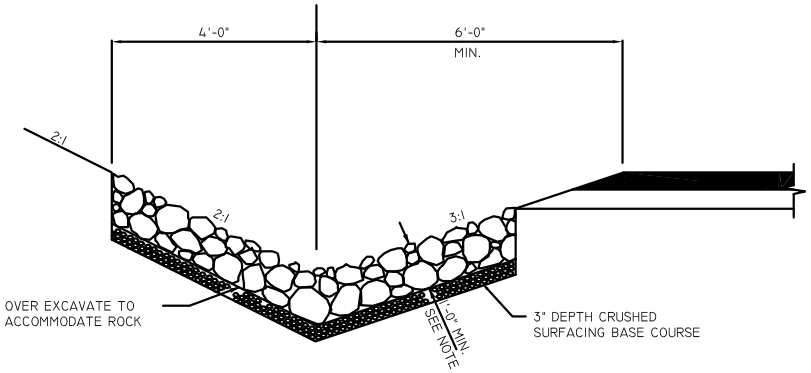

ROCK-LINED SHOULDER DITCH
IN CUT SECTION

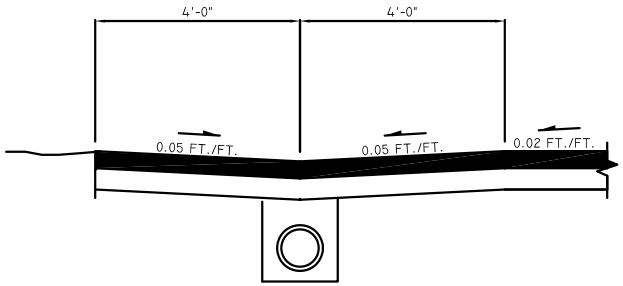

TURNPIKE SHOULDER

City of Duvall

ROCK LINED SHOULDER DITCHES & CURBED OR TURNPIKE SHOULDERS	REVISED 5/10/07
STANDARD PLAN	3-02-024

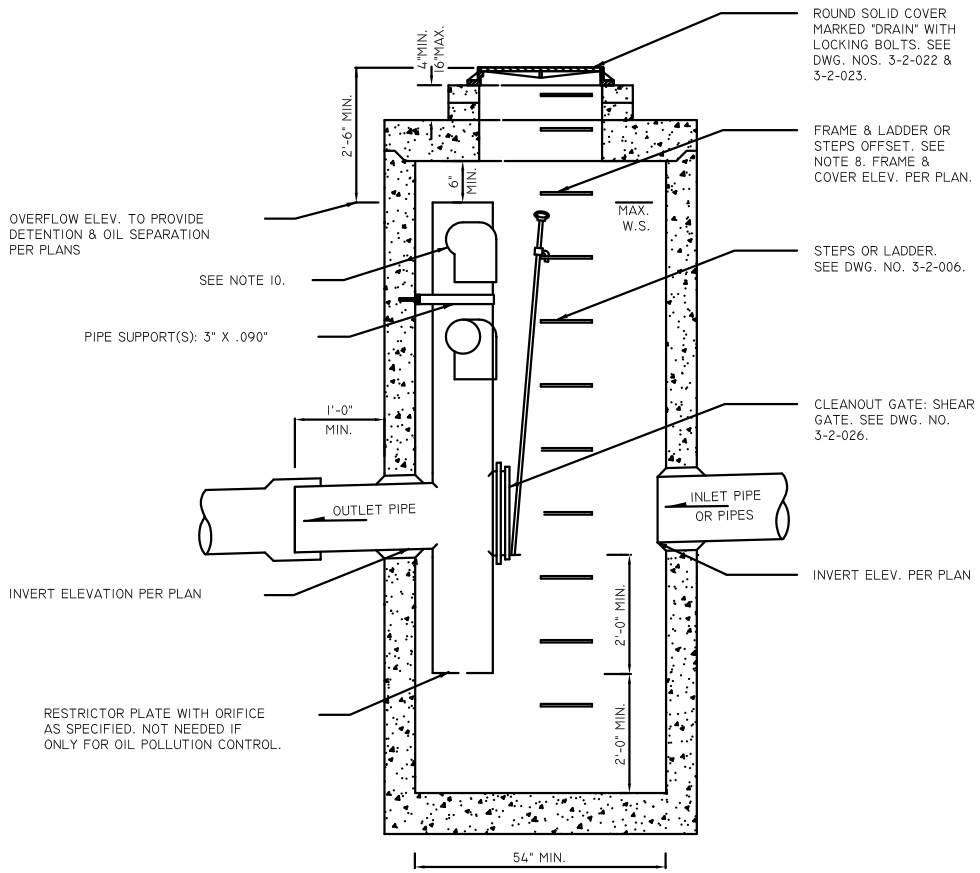

CATCH BASIN TYPE 2

DIAM. AS REQUIRED
SEE DWG. NO. 3-2-005.

NOTES:

1. SEE KING COUNTY SURFACE WATER DESIGN MANUAL FOR SPECIFIC DESIGN CRITERIA.
2. PIPE SIZES AND SLOPES: PER PLANS.
3. OUTLET CAPACITY: NOT LESS THAN COMBINED INLETS.
4. EXCEPT AS SHOWN OR NOTED, UNITS SHALL BE CONSTRUCTED IN ACCORDANCE WITH THE REQUIREMENTS FOR CATCH BASIN TYPE 2, 54" MIN. DIAM.
5. PIPE SUPPORTS AND RESTRICTOR / SEPARATOR SHALL BE OF SAME MATERIAL, AND BE ANCHORED AT 3' MAX. SPACING BY 5/8" DIAM. STAINLESS STEEL EXPANSION BOLTS OR EMBEDDED 2" IN WALL.
6. THE RESTRICTOR / SEPARATOR SHALL BE FABRICATED FROM .060" ALUMINUM, OR .064" ALUMINIZED STEEL, OR .064" GALVANIZED STEEL PIPE; IN ACCORDANCE WITH AASHTO M 36, M 196, M 197 AND M 274. GALVANIZED STEEL SHALL HAVE TREATMENT 1.
7. OUTLET SHALL BE CONNECTED TO CULVERT OR SEWER PIPE WITH A STANDARD COUPLING BAND FOR CORRUGATED METAL PIPE, OR GROUTED INTO THE BELL OF CONCRETE PIPE.
8. THE VERTICAL RISER STEM OF THE RESTRICTOR / SEPARATOR SHALL BE THE SAME DIAM. AS THE HORIZONTAL OUTLET PIPE, WITH AN 8" MIN. DIAM.
9. FRAME AND LADDER OR STEPS OFFSET SO THAT:
   A. CLEANOUT GATE IS VISIBLE FROM TOP.
   B. CLIMB DOWN SPACE IS CLEAR OF RISER AND CLEANOUT GATE.
   C. FRAME IS CLEAR OF CURB.
10. IF METAL OUTLET PIPE CONNECTS TO CEMENT CONCRETE PIPE: OUTLET PIPE TO HAVE SMOOTH O.D. EQUAL TO CONCRETE PIPE I.D. LESS 1/4".
11. MULTI-ORIFICE ELBOWS MAY BE LOCATED AS SHOWN OR ALL ON ONE SIDE OF RISER TO ASSURE LADDER CLEARANCE.

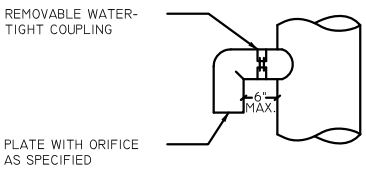

ELBOW DETAIL

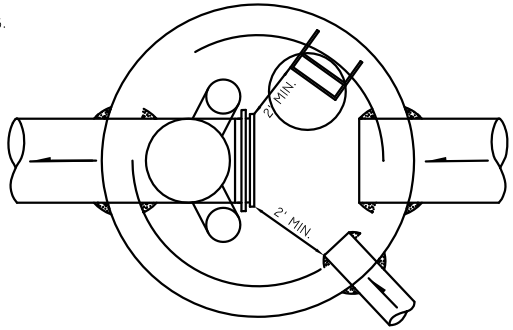

PLAN

City of Duvall

FLOW RESTRICTOR/OIL POLLUTION CONTROL DEVICE, TEE TYPE (FROP-T)	REVISED 5/10/07
STANDARD PLAN	3-02-025

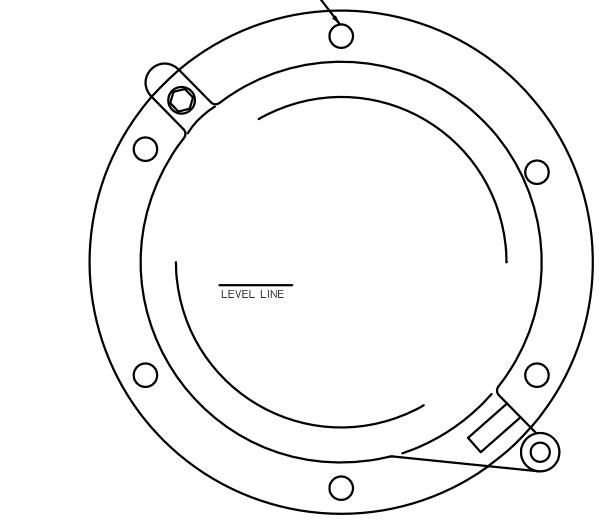

FRONT

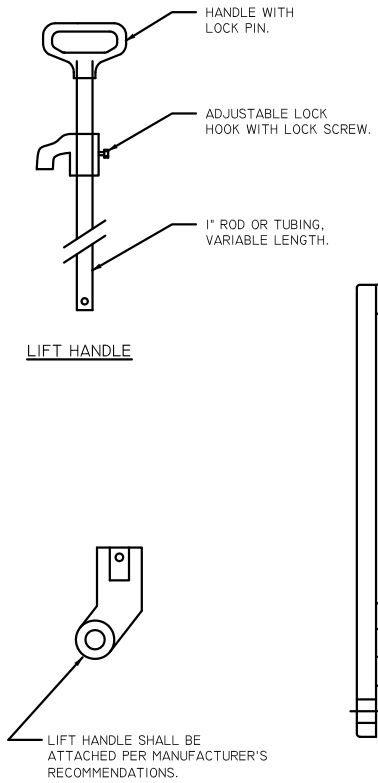

LIFT HANDLE

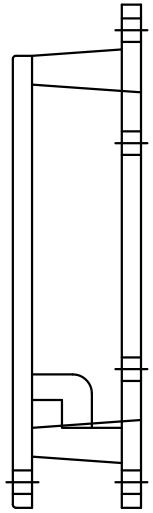

SIDE

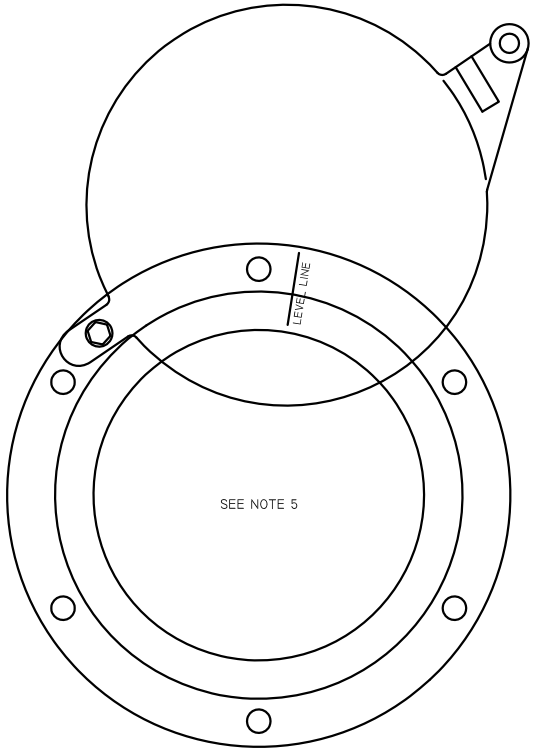

MAXIMUM OPENING OF GATE

NOTES:

1. SEE KING COUNTY SURFACE WATER DESIGN MANUAL FOR SPECIFIC DESIGN CRITERIA.
2. SHEAR GATE SHALL BE ALUMINUM ALLOY PER ASTM B-26-ZG-32A OR CAST IRON ASTM A48 CLASS 30B AS REQUIRED.
3. GATE SHALL BE 8" DIAM. UNLESS OTHERWISE SPECIFIED.
4. GATE SHALL BE JOINED TO TEE SECTION BY BOLTING (THROUGH FLANGE), WELDING, OR OTHER SECURE MEANS.
5. LIFT ROD: AS SPECIFIED BY MFR. WITH HANDLE EXTENDING TO WITHIN ONE FOOT OF COVER AND ADJUSTABLE HOOK LOCK FASTENED TO FRAME OR UPPER HANDHOLD.
6. GATE SHALL NOT OPEN BEYOND THE CLEAR OPENING BY LIMITED HINGE MOVEMENT, STOP TAB, OR SOME OTHER DEVICE.
7. NEOPRENE RUBBER GASKET REQUIRED BETWEEN RISER MOUNTING FLANGE AND GATE FLANGE.
8. MATING SURFACES OF LID AND BODY TO BE MACHINED FOR PROPER FIT.
9. FLANGE MOUNTING BOLTS SHALL BE 3/8" DIAM. STAINLESS STEEL.
10. ALTERNATE CLEANOUT/SHEAR GATES TO THE DESIGN SHOWN ARE ACCEPTABLE, PROVIDED THEY MEET THE MATERIAL SPECIFICATIONS ABOVE AND HAVE A SIX BOLT, 10 3/8" BOLT CIRCLE FOR BOLTING TO THE FLANGE CONNECTION.

City of Duvall

FROP-T SHEAR GATE DETAIL	REVISED 5/10/07
STANDARD PLAN	3-02-026

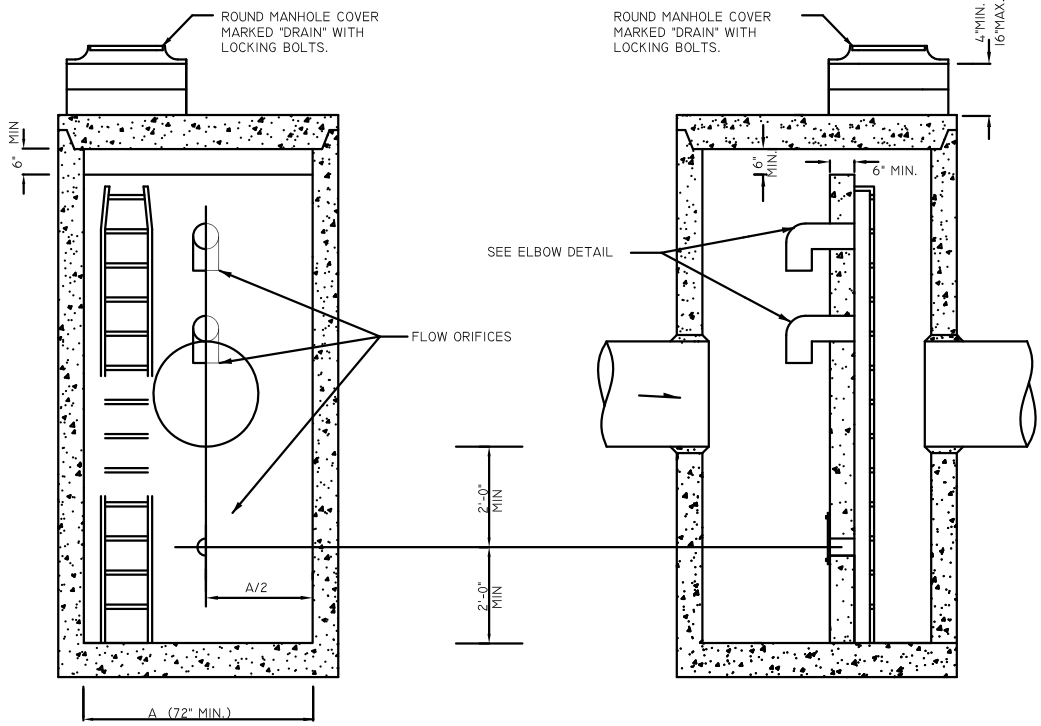

SECTION A-A

SECTION B-B

ELEVATION

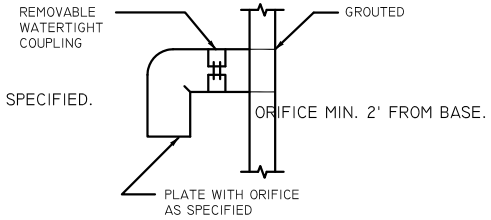

ELBOW DETAIL

SEE DWG. NO. 3-2-022 & 3-2-023.

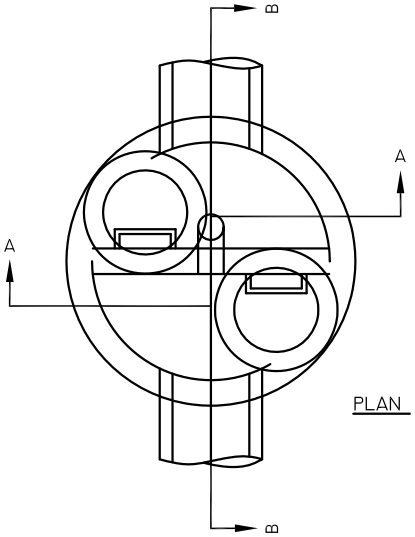

PLAN

NOTES:

1. SEE KING COUNTY SURFACE WATER DESIGN MANUAL FOR SPECIFIC DESIGN CRITERIA.
2. PIPE SIZE, SLOPES AND ALL ELEVATIONS: PER PLANS.
3. OUTLET CAPACITY: NOT LESS THAN COMBINED INLETS.
4. CATCH BASIN: TYPE 2, TO BE CONSTRUCTED IN ACCORDANCE WITH DWG. NO. 3-2-005 AND AASHTO M199 UNLESS OTHERWISE
5. COVERS: ROUND, SOLID MARKED "DRAIN," WITH LOCKING BOLTS
6. ORIFICES: SIZED AND LOCATED AS REQUIRED.
7. BAFFLE WALL SHALL HAVE #4 BAR AT 12" SPACING EACH WAY.
8. PRECAST BAFFLE WALL SHALL BE KEYED AND GROUTED IN PLACE.
9. BOTTOM ORIFICE PLATE TO BE 1/4" MIN. GALVANIZED STEEL AND ATTACHED WITH 1/2" STAINLESS STEEL BOLTS. OMIT ORIFICE PLATE IF ONLY FOR OIL SEPARATION.
10. UPPER FLOW ORIFICE SHALL BE ALUMINUM, ALUMINIZED STEEL OR GALVANIZED STEEL. SEE DWG. NO. 3-2-025. GALVANIZED STEEL SHALL HAVE TREATMENT 1.

City of Duvall

FLOW RESTRICTOR / OIL POLLUTION CONTROL DEVICE, BAFFLE TYPE (FROP-B)	REVISED 5/10/07
STANDARD PLAN	3-02-027

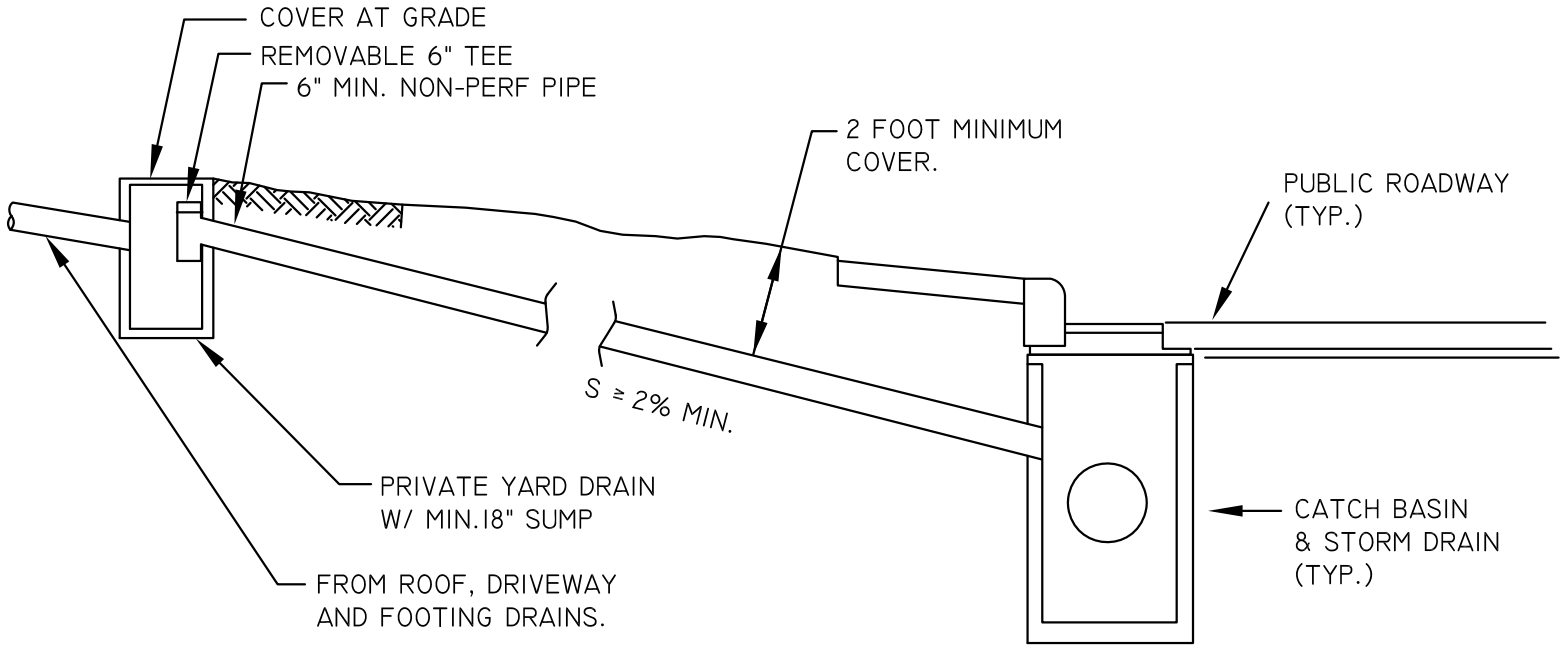

*IF NO YARD DRAIN IS REQUIRED, CLEANOUT SHALL BE USED AT AFTER WYE WHERE ROOF & FOOTINGS ARE CONNECTED (5' AWAY FROM HOUSE MAX.)

City of Duvall

INDIVIDUAL LOT & ROOF DRAIN	REVISED 5/10/07
STANDARD PLAN	3-02-028

NOT FOR PUBLIC ROADWAY CONSTRUCTION

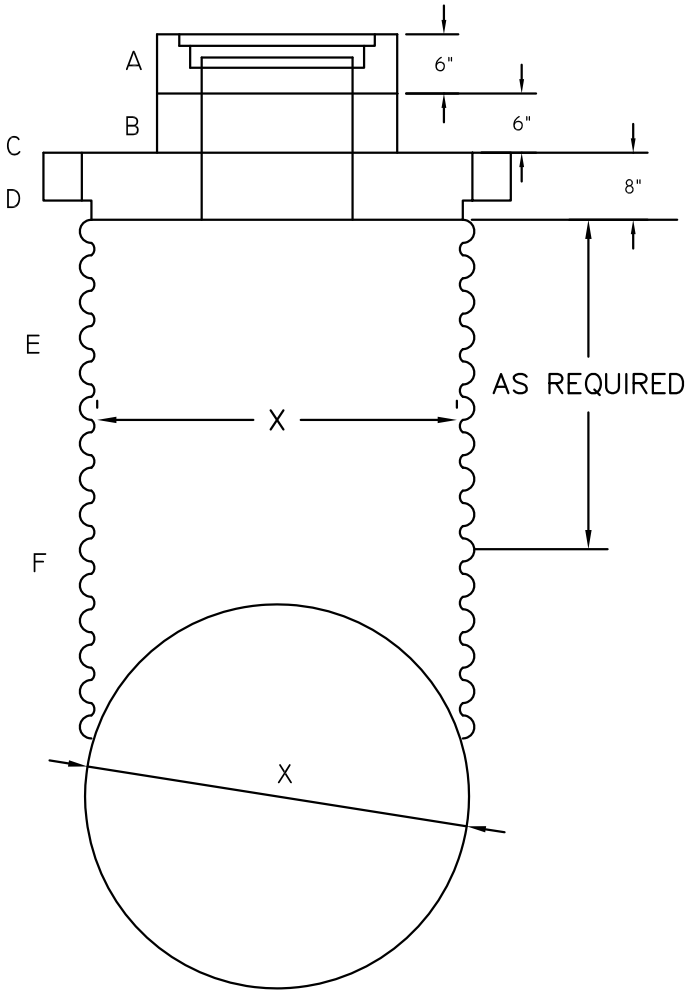

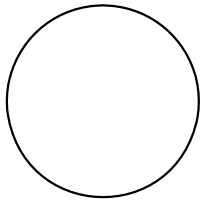

UNIT "M"

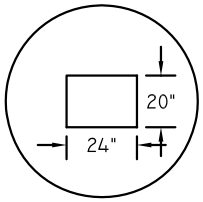

UNIT "N"

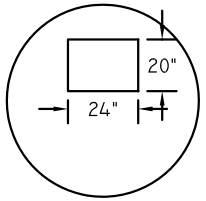

UNIT "P"

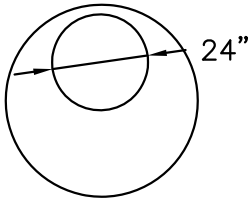

UNIT "R"

SEE CITY OF DUVALL STANDARD PLAN 3-2-011 FOR SLAB REINFORCING DETAILS

A. CONCRETE TOP SLAB: SHORT ADJUSTMENT SECTION WITH DUCTILE IRON FRAME AND GRATE, PER STDS.
B. CONCRETE 6" ADJUSTMENT SECTION AS REQUIRED.
C. CONCRETE REDUCING FLAT SLAB: UNITS "M", "N", "P", OR "R", AS REQUIRED BY PLANS. REINFORCED TO COMPLY WITH CITY OF DUVALL STANDARD PLAN 3-2-011
D. OPTIONAL STEEL LID FOR HS20 LOAD.
E. CMP RISER: 10 GAUGE 54" HELICAL OR ANGULAR CORRUGATED METAL PIPE IN HEIGHTS AS REQUIRED. FOR HEIGHTS GREATER THAN 4' USE PRE FABRICATED LADDER PER CITY OF DUVALL STD. PLAN 3-2-011.
F. CORRUGATED METAL PIPE 60" AND GREATER IN DIAMETER WITH GAUGE AND SIZE AS REQUIRED ON PLAN.

NOTE: ALL METAL PARTS AND SURFACES MUST BE MADE OF CORROSION RESISTANT MATERIAL OR ASPHALT COATED GALVANIZED, TREATMENT #1 OR BETTER; COMPLETE CORROSION PROTECTION MUST BE ASSURED.

City of Duvall

OFFSET CORRUGATED MANHOLE	REVISED 5/10/07
STANDARD PLAN	3-02-029

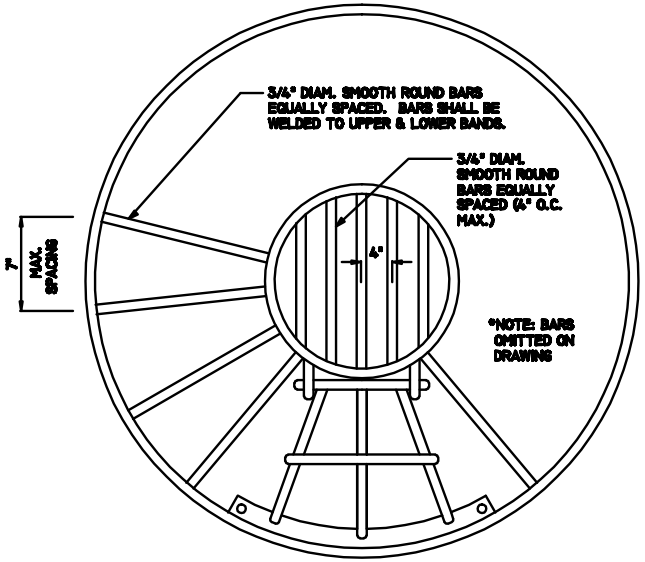

PLAN

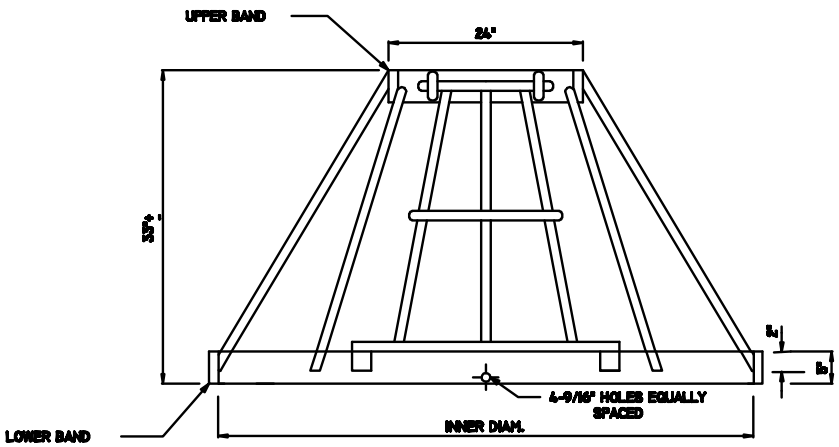

ELEVATION

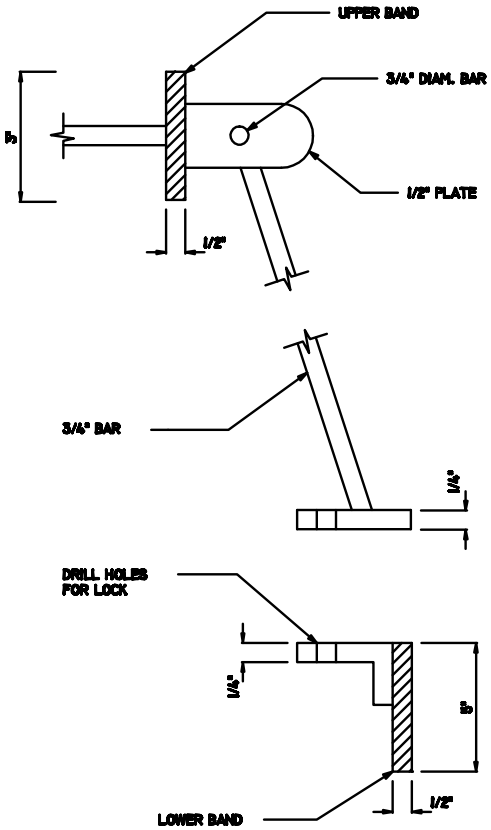

ENTRY GATE DETAIL

NOTES:

1. ALL STEEL PLATES, BARS AND BANDS SHALL CONFORM TO THE REQUIREMENTS OF ASTM A36.
2. DEBRIS CAGE SHALL BE HOT-DIP GALVANIZED IN ACCORDANCE WITH ASTM A123 (AASHTO M111).

CB	INNER DIAM.
48"	58"
54"	65"
60"	72"
72"	86"
96"	114"

City of Duvall

DEBRIS CAGE	REVISED 5/10/07
STANDARD PLAN	3-02-030

DEFAULT TO VERTICAL CURB & GUTTER IF PLAN DOES NOT SPECIFY

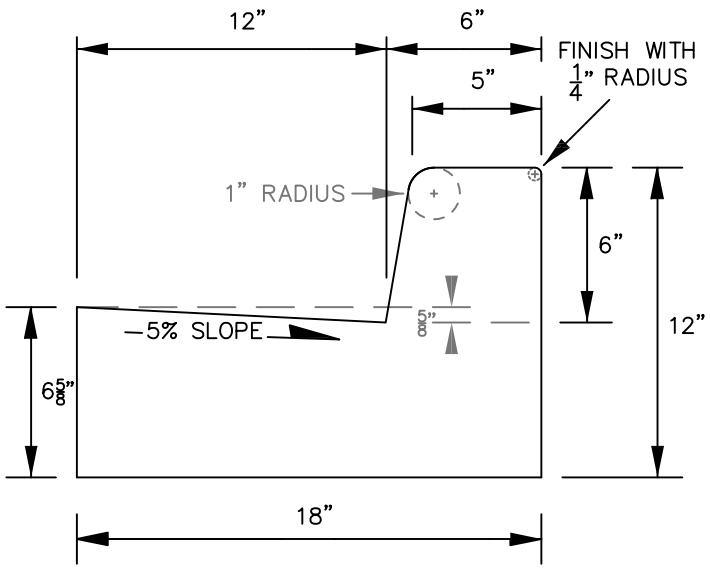

TYPICAL VERTICAL CURB AND GUTTER

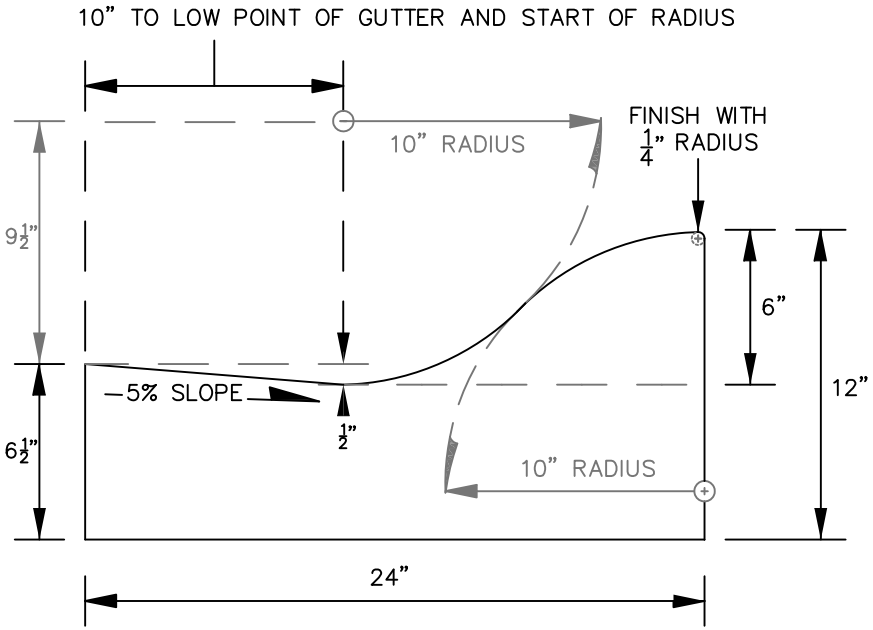

TYPICAL ROLLED CURB AND GUTTER

RELATED DETAILS:

1. ALTERNATE CURB STYLES:
   DETAIL 3-3-002B
2. ROAD SECTIONS:
   DETAIL 3-1-001 THROUGH 3-1-006
3. DRIVEWAY REQUIREMENTS:
   DETAIL 3-3-004 THROUGH 3-3-005
4. EXPANSION JOINT REQUIREMENTS:
   DETAIL 3-03-005B.

DUVALL DESIGN STANDARDS: 2007

REVISION	BY	DATE
NEW FORMAT	DLC	03-21-11

City of Duvall

TYPICAL CURB AND GUTTER DETAILS AND DIMENSIONS

DRAWING NUMBER 3-03-002A

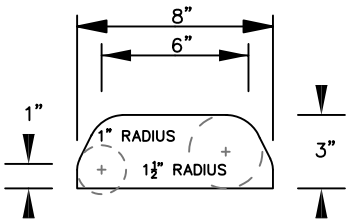

TYPE 1 EXTRUDED CURB

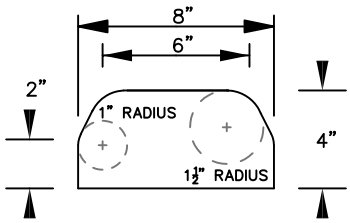

TYPE 2 EXTRUDED CURB

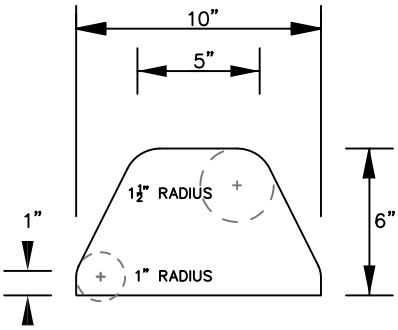

TYPE 3 EXTRUDED CURB

NOTES ON ATTACHING EXTRUDED CURB:

EXTRUDED CONCRETE CURB SHALL BE ATTACHED WITH STEEL TIE BARS OR ADHESIVE. EXTRUDED ASPHALT CURB SHALL BE ATTACHED WITH A TACK COAT. ALL ATTACHMENT METHODS MUST CONFORM TO WSDOT/APWA SECTION 8-04.

MORE INFO CAN BE FOUND IN THE DUVALL DESIGN STANDARDS SEC. 3-3.03.

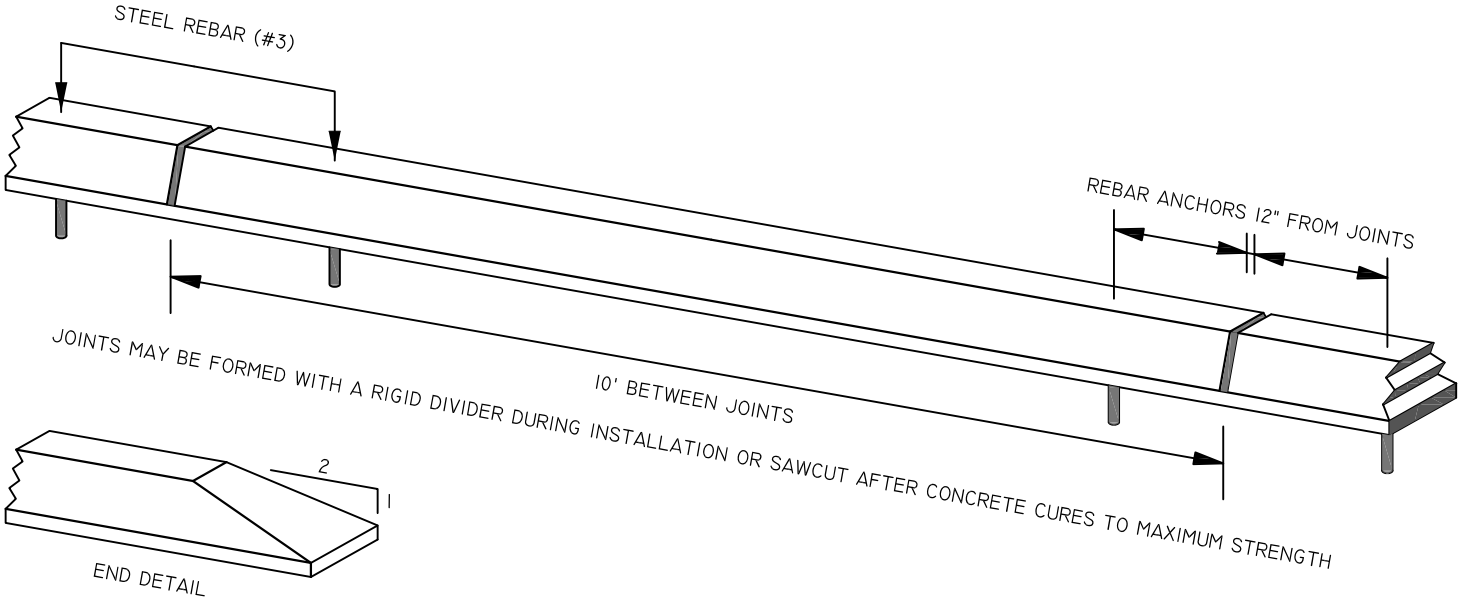

RELATED DETAILS:

1. STANDARD CURB & GUTTER DETAILS:
   DETAIL 3-3-002A
2. ROAD SECTIONS:
   DETAIL 3-1-001 THROUGH 3-1-006
3. DRIVEWAY REQUIREMENTS:
   DETAIL 3-3-004 THROUGH 3-3-005
4. EXPANSION JOINT REQUIREMENTS:
   DETAIL 3-03-005B.

DUVALL DESIGN STANDARDS: 2007			City of Duvall	EXTRUDED CURB DETAILS AND DIMENSIONS
REVISION	BY	DATE		
NEW FORMAT	DLC	03-22-11		DRAWING NUMBER 3-03-02B

F:\Public Works\Development Guidelines\DDS Manual\2009 Update\Details\DWG\3-03-002B Extruded Curb Dimensions DC.dwg]

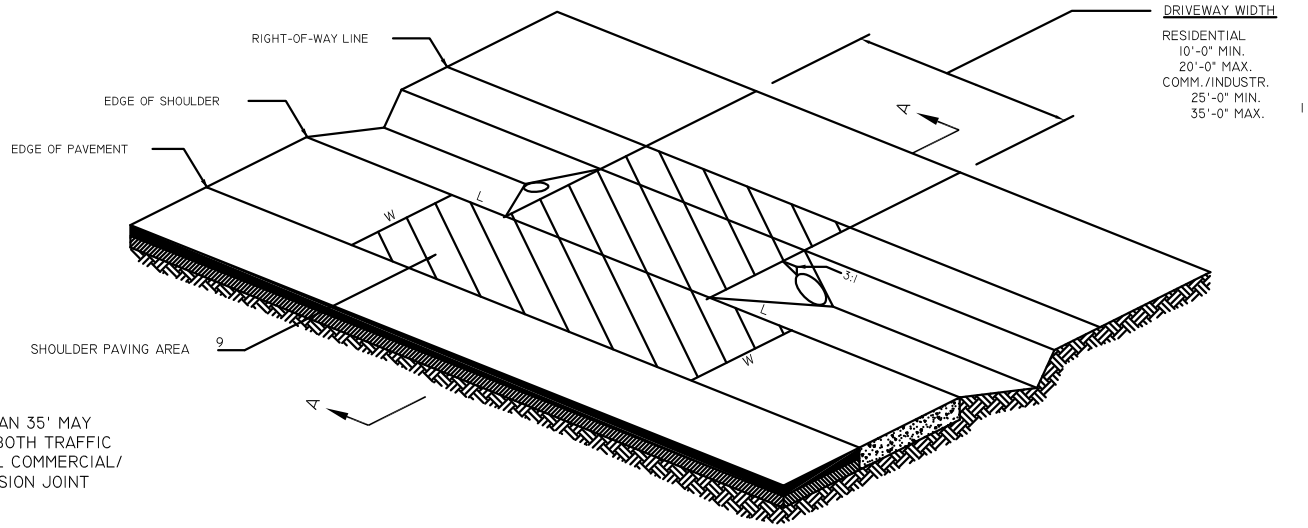

NOTES:

1. COMMERCIAL/INDUSTRIAL DRIVEWAYS WIDER THAN 35' MAY BE APPROVED BY THE ENGINEER CONSIDERING BOTH TRAFFIC SAFETY AND THE ACTIVITY BEING SERVED. ALL COMMERCIAL/ INDUSTRIAL DRIVEWAYS SHALL HAVE AN EXPANSION JOINT LOCATED MID-WIDTH. SEE SEC. 3-3.04.

2. PIPE SHALL BE:
   A. SIZED TO CONVEY COMPUTED STORM WATER RUNOFF, AND
   B. MIN. 12" DIAM., AND
   C. EQUAL TO OR LARGER THAN EXISTING PIPES WITHIN 500' UPSTREAM.

3. EXPOSED PIPE ENDS SHALL BE BEVELED TO MATCH THE SLOPE FACE AND PROJECT NO MORE THAN 2" BEYOND SLOPE SURFACE. PROJECTING HEADWALLS ARE NOT ACCEPTABLE.

4. CONCRETE PIPE SHALL HAVE MIN. COVER OF 6" TO FINISH GRADE. ALL OTHER TYPES OF PIPE SHALL HAVE MIN. 12" COVER.

5. PIPE SHALL BE INSTALLED IN A STRAIGHT UNIFORM ALIGNMENT AT A MIN. 0.5% SLOPE (0.5 FT. PER 100 FT.) WITH THE DOWNSTREAM END LOWER THAN THE UPSTREAM END.

6. PIPE MAY BE OMITTED IF ROADSIDE DITCH DOES NOT EXIST AND DRIVEWAY DOES NOT BLOCK NATURAL FLOW.

7. DRIVEWAY SLOPE SHALL MATCH TO BACK EDGE OF SHOULDER, BUT SHOULDER SLOPE AND EDGE OF SHOULDER SHALL NOT BE ALTERED AS A RESULT OF DRIVEWAY CONSTRUCTION.

8. PAVED DRIVEWAYS SHALL BE PAVED THROUGH RIGHT-OF-WAY WITH A.C. OR B.S.T., BUT NOT P.C.C.

9. GRAVEL DRIVEWAYS SHALL BE PAVED BETWEEN THE EDGE OF PAVEMENT AND R/W WITH A.C. OR B.S.T. ONLY WITH DIMENSIONS L=W.

10. SEE SEC. 3-3.01 AND 3-4.01.

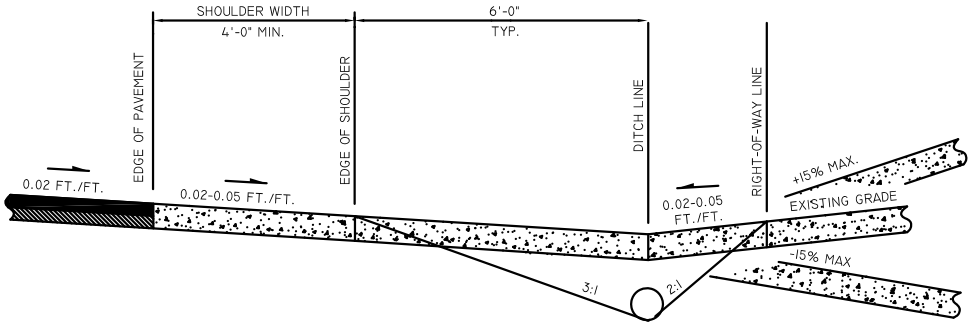

SECTION A–A

City of Duvall

SHOULDER & DITCH DRIVEWAY SECTION	REVISED 5/10/07
STANDARD PLAN	3-03-003

USE THIS DETAIL ON STANDARD DRIVEWAYS WHERE PRIVATE DRIVE IS AT OR ABOVE TOP BACK OF SIDEWALK

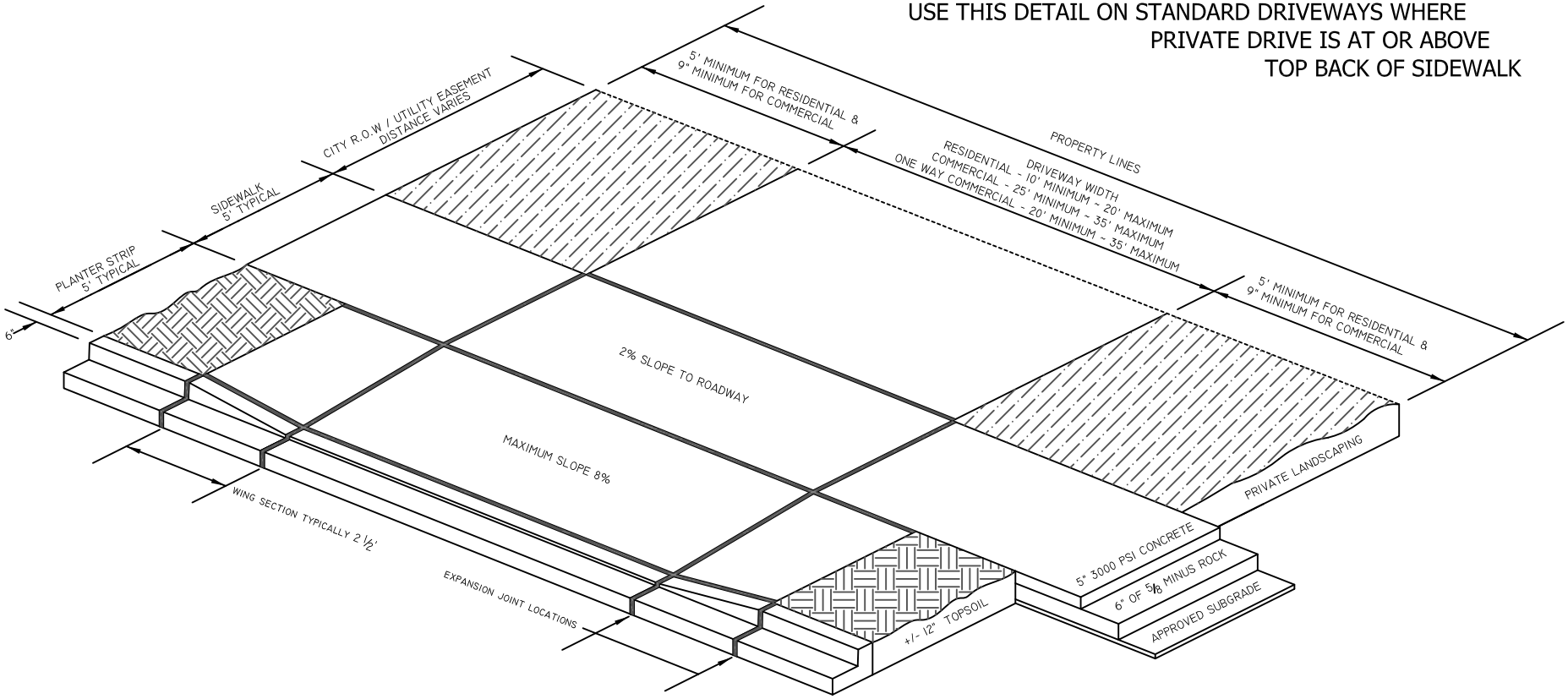

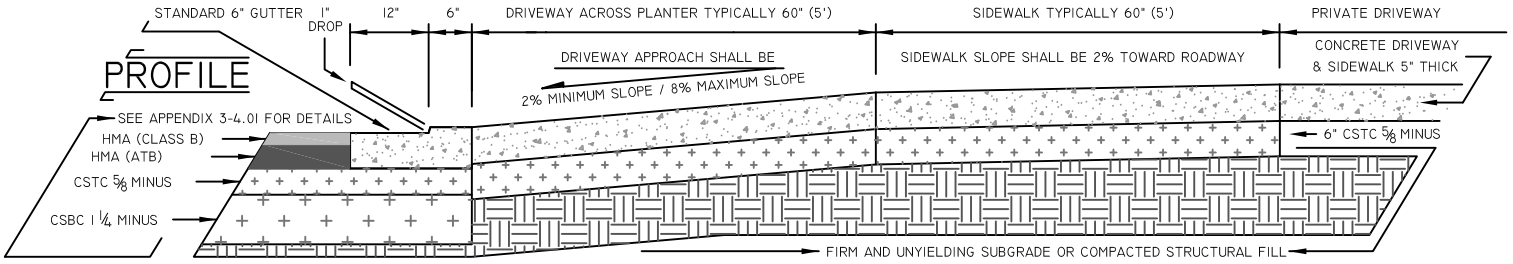

NOTES:

1. COMMERCIAL DRIVEWAYS WIDER THAN 35' MAY BE APPROVED BY THE ENGINEER CONSIDERING TRAFFIC SAFETY & THE NEEDS OF THE ACTIVITY SERVED
2. ALL COMMERCIAL DRIVEWAYS SHALL HAVE AN EXPANSION JOINT LOCATED MID-WIDTH - SEE APPENDIX 3-3.04
3. SEE CHART ON APPENDIX 3-4.01 FOR SPECIFIC SURFACING REQUIREMENTS
4. SEE APPENDIX 3-3.01 FOR GENERAL DRIVEWAY REQUIREMENTS
5. FRESHLY POURED CONCRETE MUST BE COVERED WITH PLASTIC SHEETING FOR A PERIOD OF 3 DAYS REGARDLESS OF WEATHER

DUVALL DESIGN STANDARDS: 2007

REVISION	BY	DATE
NEW FORMAT	DLC	03-22-11

City of Duvall

STANDARD DRIVEWAY WITH PLANTER STRIP

DRAWING NUMBER 3-03-004A

F:\Public Works\Development Guidelines\DDS Manual\2009 Update\Details\DWG\3-03-004B Driveway with NO planterstrip DC.dwg]

USE THIS DETAIL ANYTIME A PLANTER STRIP IS NOT REQUIRED

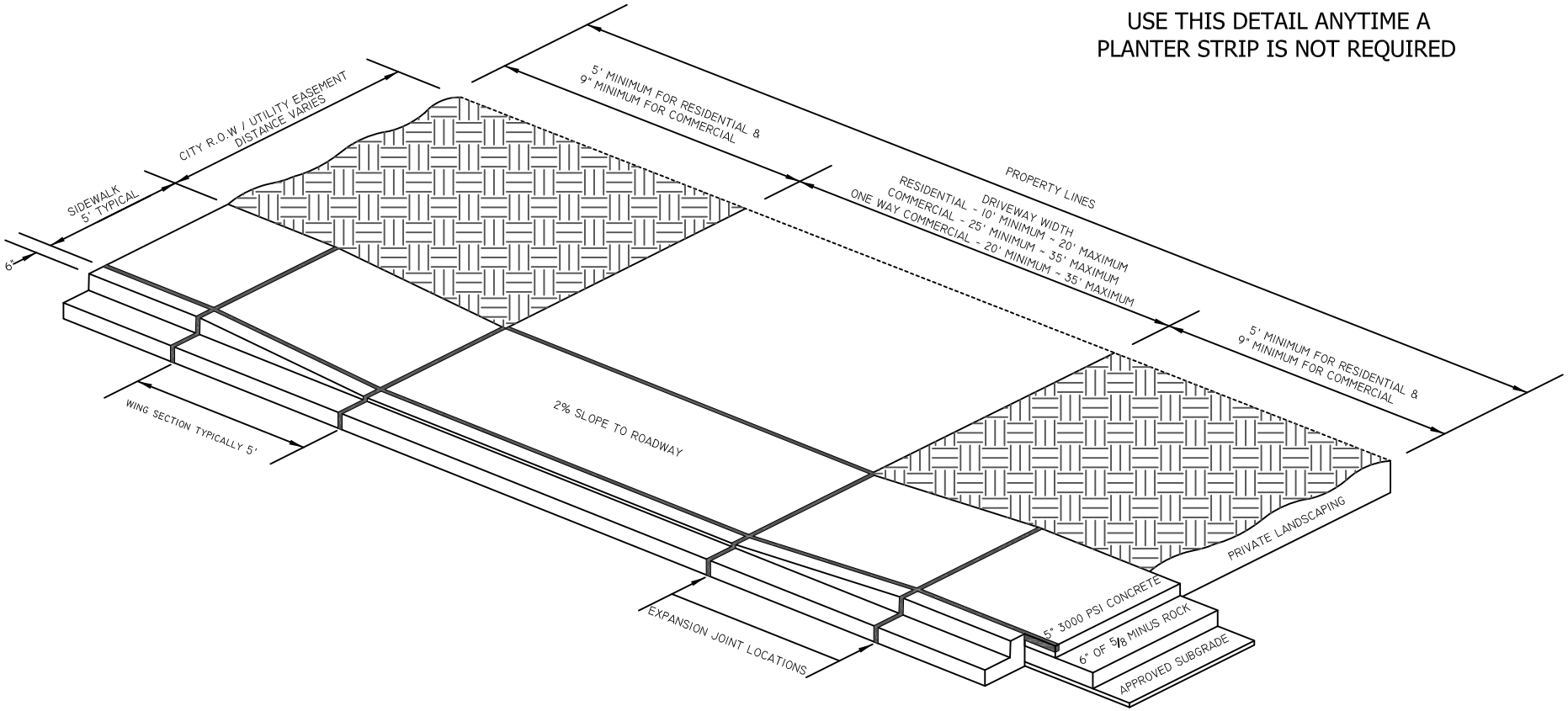

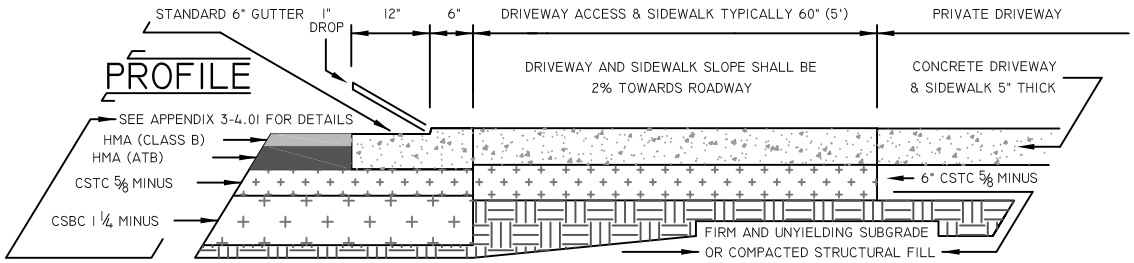

NOTES:

1. COMMERCIAL DRIVEWAYS WIDER THAN 35' MAY BE APPROVED BY THE ENGINEER CONSIDERING TRAFFIC SAFETY & THE NEEDS OF THE ACTIVITY SERVED
2. ALL COMMERCIAL DRIVEWAYS SHALL HAVE AN EXPANSION JOINT LOCATED MID-WIDTH - SEE APPENDIX 3-3.04
3. SEE CHART ON APPENDIX 3-4.01 FOR SPECIFIC SURFACING REQUIREMENTS
4. SEE APPENDIX 3-3.01 FOR GENERAL DRIVEWAY REQUIREMENTS
5. FRESHLY POURED CONCRETE MUST BE COVERED WITH PLASTIC SHEETING FOR A PERIOD OF 3 DAYS REGARDLESS OF WEATHER

DUVALL DESIGN STANDARDS: 2007

REVISION	BY	DATE
NEW FORMAT	DLC	03-22-11

City of Duvall

STANDARD DRIVEWAY WITHOUT PLANTER STRIP

DRAWING NUMBER 3-03-004B

USE THIS DETAIL WHEN DRIVEWAY IS AT OR BELOW ROAD GRADE AND A PLANTER STRIP IS REQUIRED

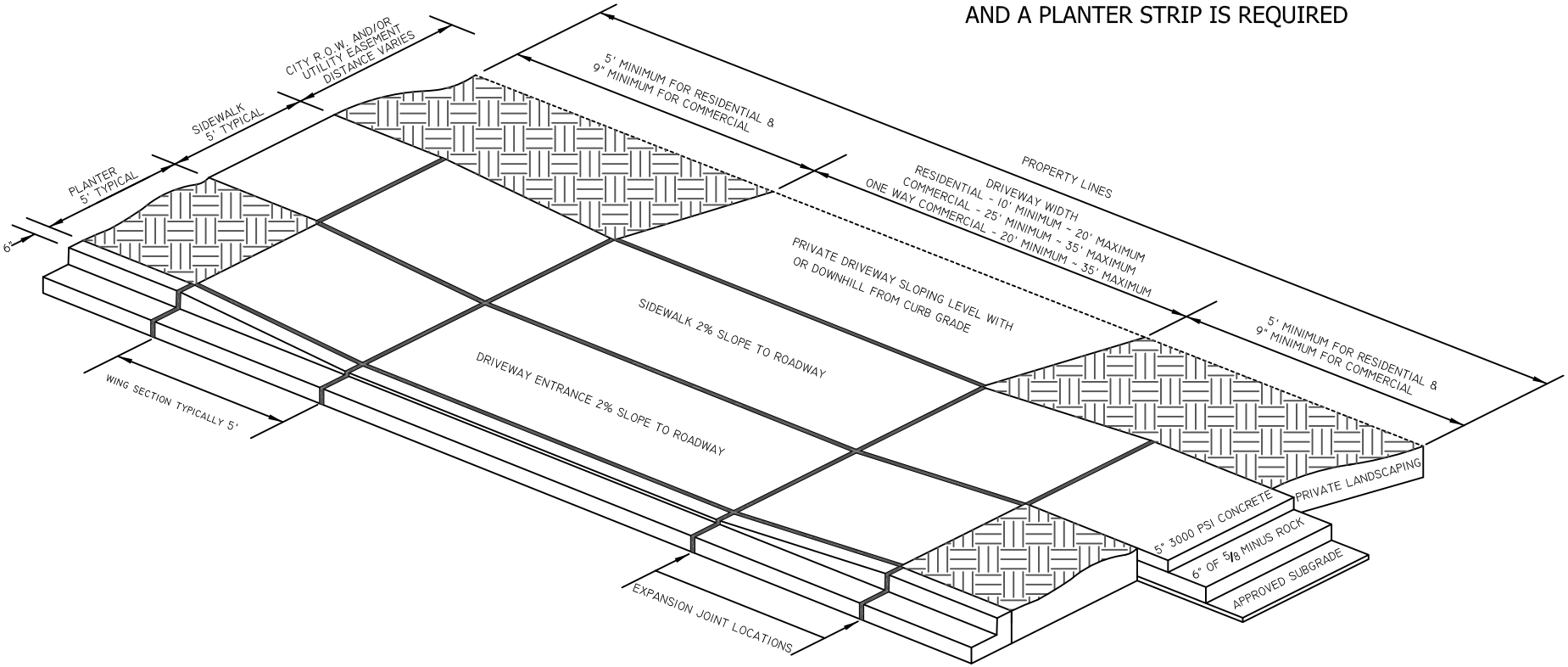

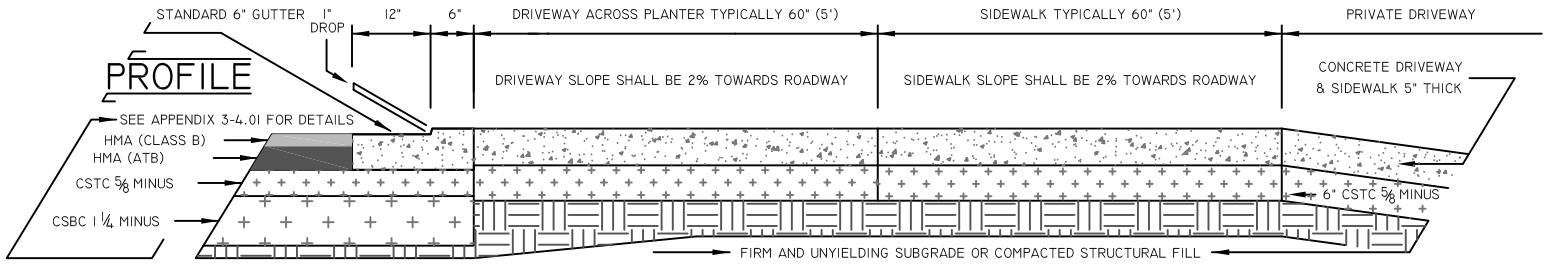

NOTES:

1. COMMERCIAL DRIVEWAYS WIDER THAN 35' MAY BE APPROVED BY THE ENGINEER CONSIDERING TRAFFIC SAFETY & THE NEEDS OF THE ACTIVITY SERVED
2. ALL COMMERCIAL DRIVEWAYS SHALL HAVE AN EXPANSION JOINT LOCATED MID-WIDTH - SEE APPENDIX 3-3.04
3. SEE CHART ON APPENDIX 3-4.01 FOR SPECIFIC SURFACING REQUIREMENTS
4. SEE APPENDIX 3-3.01 FOR GENERAL DRIVEWAY REQUIREMENTS
5. FRESHLY POURED CONCRETE MUST BE COVERED WITH PLASTIC SHEETING FOR A PERIOD OF 3 DAYS REGARDLESS OF WEATHER

DUVALL DESIGN STANDARDS: 2007

REVISION	BY	DATE
NEW FORMAT	DLC	03-22-11

City of Duvall

REVERSE SLOPE DRIVEWAY WITH PLANTERSTRIP

DRAWING NUMBER 3-03-005

F:\Public Works\Development Guidelines\DDS Manual\2009 Update\Details\DWG\3-03-005B Concrete Expansion Joint Detail DC.dwg]

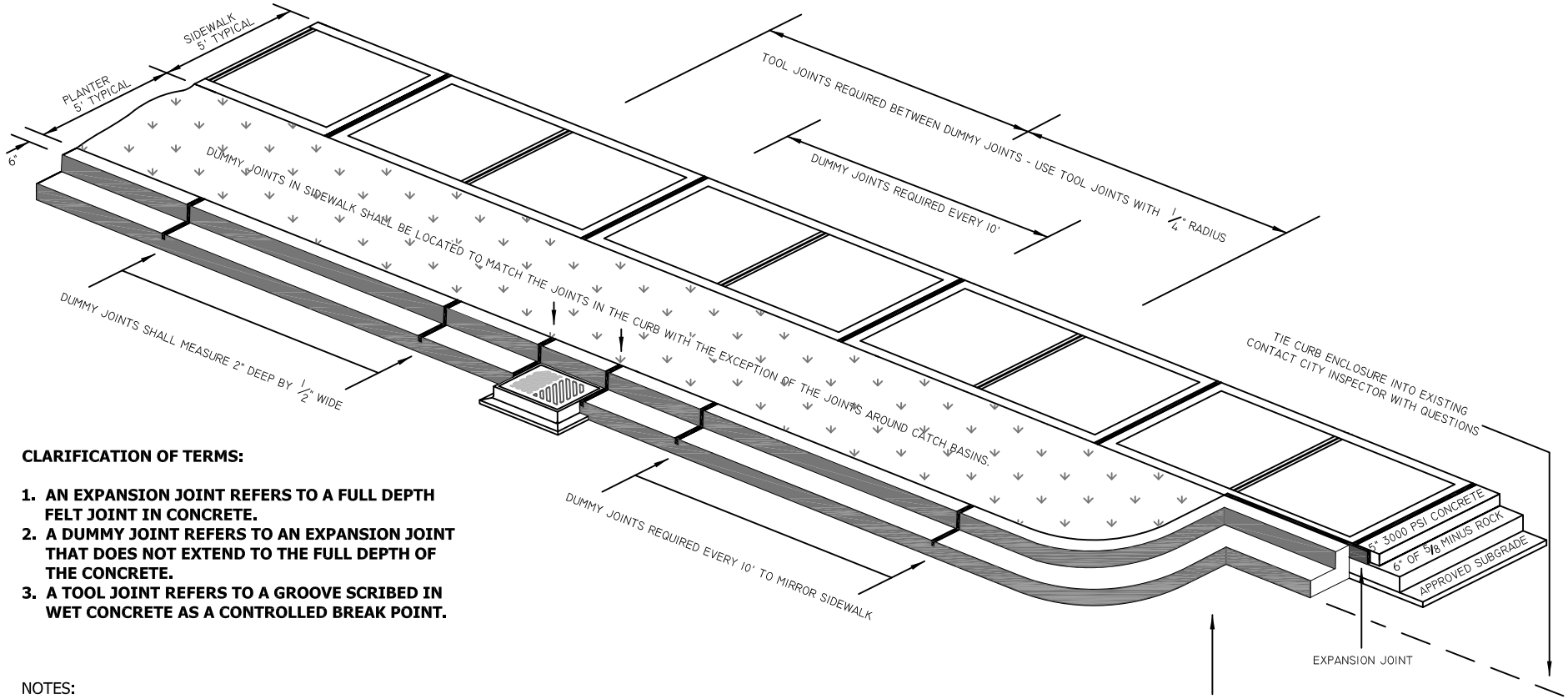

CLARIFICATION OF TERMS:

1. **AN EXPANSION JOINT REFERS TO A FULL DEPTH FELT JOINT IN CONCRETE.**
2. **A DUMMY JOINT REFERS TO AN EXPANSION JOINT THAT DOES NOT EXTEND TO THE FULL DEPTH OF THE CONCRETE.**
3. **A TOOL JOINT REFERS TO A GROOVE SCRIBED IN WET CONCRETE AS A CONTROLLED BREAK POINT.**

ENCLOSE PLANTER STRIP WITH CURB AND GUTTER ANYTIME IT TERMINATES
PLANTER STRIP ENCLOSURE RADIUS SHALL BE 1/2 OF THE PLANTER STRIP WIDTH UNLESS SPECIFIED ON PLANS
CONTRACTOR WILL REMOVE THIS PANEL TO TIE IN FOR FUTURE CONSTRUCTION

NOTES:

1. FRESHLY POURED CONCRETE MUST BE COVERED WITH PLASTIC SHEETING FOR 3 DAYS REGARDLESS OF WEATHER
2. ALL CONCRETE WORK MUST BE SMOOTH, STRAIGHT, & APPEALING TO THE EYE
3. ANY CONCRETE REPLACEMENT SHALL BE PERFORMED FROM JOINT TO JOINT - NO PATCHING ALLOWED
4. ALL COMMERCIAL DRIVEWAYS SHALL HAVE AN EXPANSION JOINT LOCATED MID-WIDTH
5. SEE STANDARDS 3-3.01 FOR GENERAL DRIVEWAY REQUIREMENTS
6. SEE CHART ON STANDARDS 3-4.01 FOR ASPHALT SURFACING REQUIREMENTS

WHEN NO PLANTERSTRIP IS USED, SEPARATE THE CURB AND SIDEWALK WITH A FULL WIDTH EXPANSION JOINT

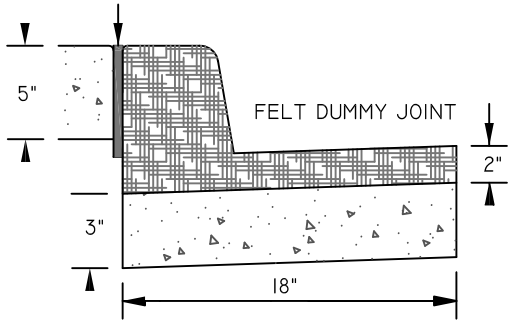

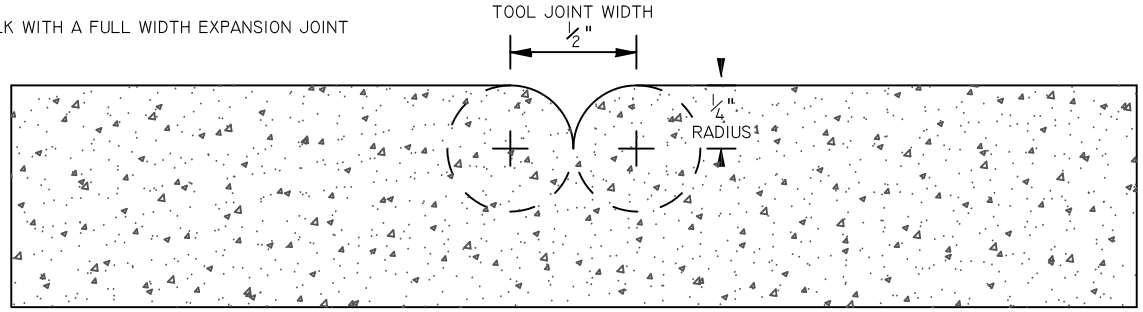

TOOL JOINT INFORMATION

DUVALL DESIGN STANDARDS: 2007

REVISION	BY	DATE
NEW FORMAT	DLC	03-22-11

City of Duvall

CURB, SIDEWALK, AND EXPANSION JOINT DETAILS

DRAWING NUMBER 3-03-005B

USE THIS AS A TEMPLATE OF WHERE TO PLACE DRIVEWAYS ON LOTS

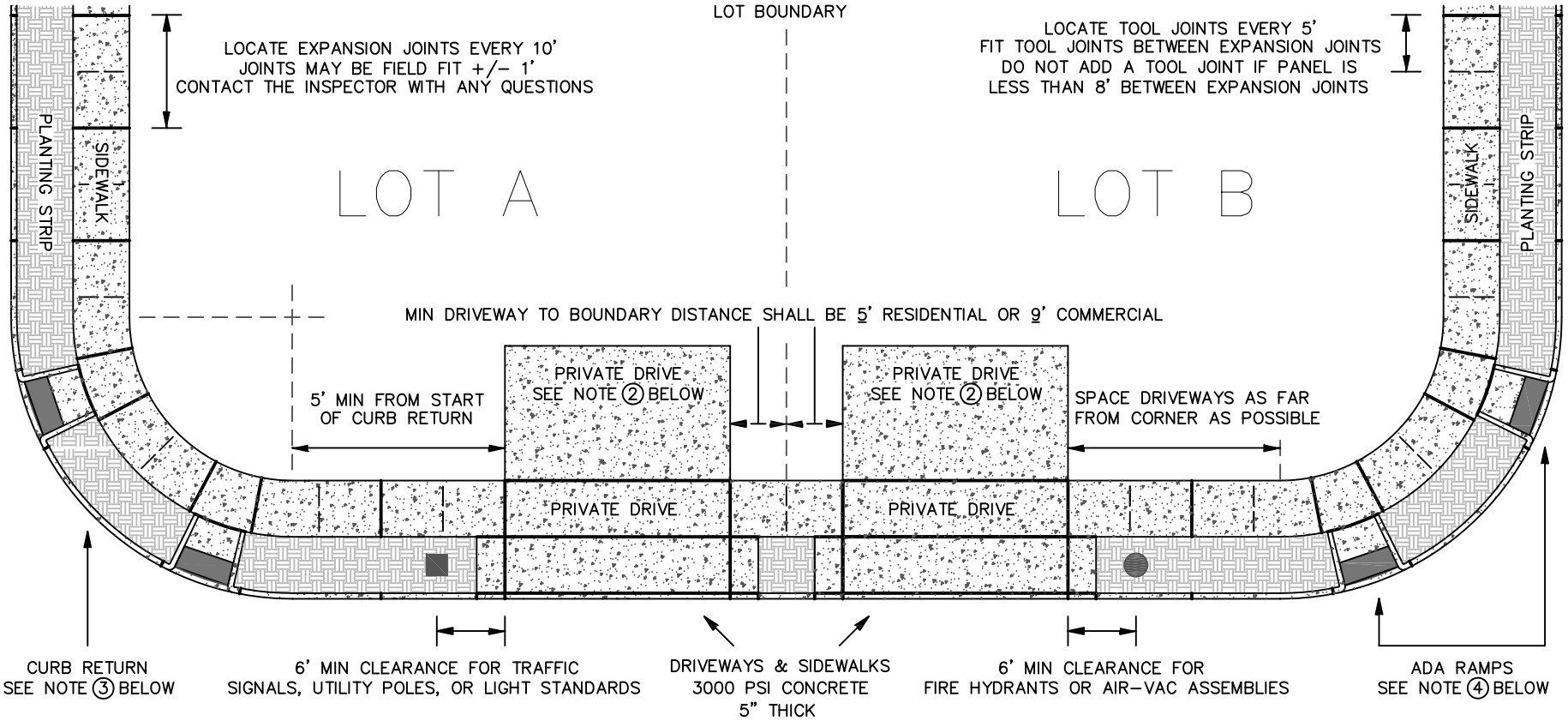

NOTES:

1. THIS DRAWING SHALL APPLY TO ALL APPLICATIONS WITH OR WITHOUT PLANTER STRIP.
2. ALL COMMERCIAL/INDUSTRIAL DRIVEWAYS MUST BE APPROVED BY THE CITY ENGINEER, CONSIDERING BOTH TRAFFIC SAFETY AND THE ACTIVITY BEING SERVED. FOR COMPLETE INFORMATION ON DRIVEWAY DESIGN, REFERENCE STANDARD DRAWINGS 3-03-004A, 3-03-004B & 3-03-005.
3. CURB RETURN RADIUS BASED ON PROJECTED SPEED OF ROADWAY. FOR MORE INFORMATION REFER TO CHAPTER 3 OF THE D.D.S. LABELED 'ROAD DESIGN STANDARDS'
4. FOR SPECIFICS ON ADA RAMP INFORMATION AND REQUIREMENTS, REFERENCE STANDARD DRAWINGS 3-04-002, 3-04-003, 3-04-004, & 3-04-005.
5. FOR SPECIFIC INFORMATION ON CURB/GUTTERS, SIDEWALKS, AND EXPANSION JOINTS, REFERENCE STANDARD DRAWING 3-3-005B
6. FOR LAYOUT OF UTILITY POLES AND STRUCTURES IN RELATION TO THE ROADWAY, REFER TO CHAPTER 3 AS MENTIONED ABOVE, OR STANDARD DRAWING 3-05-001.

DUVALL DESIGN STANDARDS: 2007

REVISION	BY	DATE
NEW FORMAT	DLC	03-03-11

City of Duvall

DRIVEWAY PLACEMENT AND SET-BACKS

DRAWING NUMBER 3-03-006

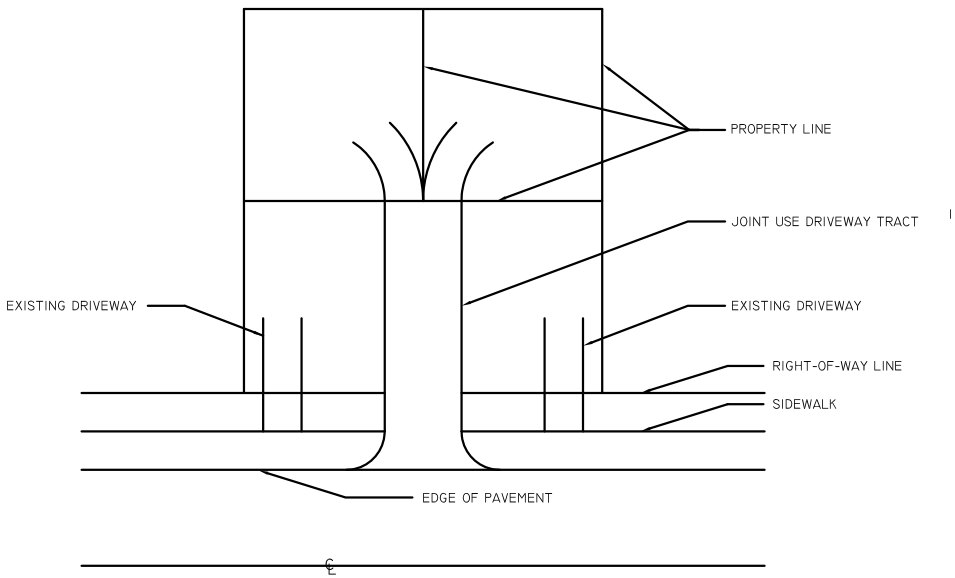

URBAN

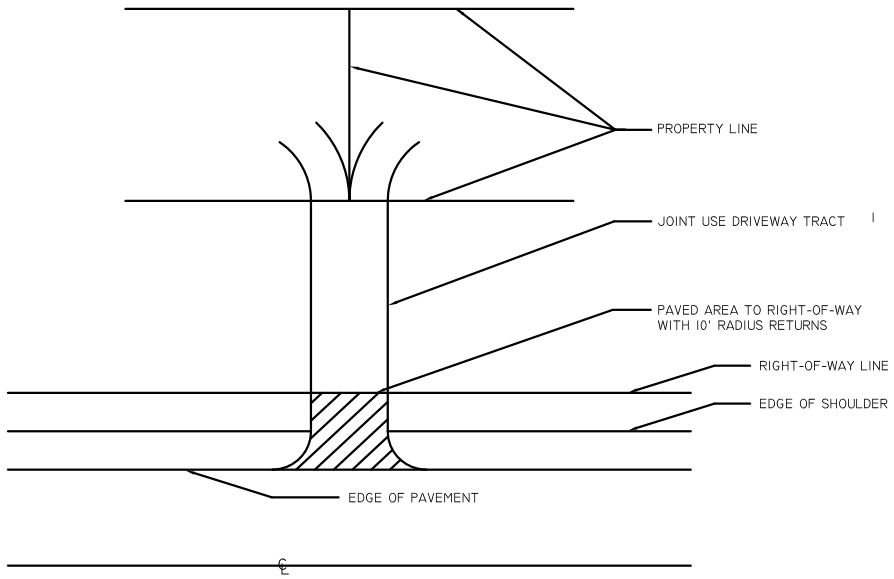

RURAL

NOTE:

1. SEE SEC. 3-3.01 FOR TRACT WIDTH AND PAVING REQUIREMENTS.

City of Duvall

JOINT USE DRIVEWAY TRACT	REVISED 5/10/07
STANDARD PLAN	3-03-007

PLEASE NOTE: CURB / SIDEWALK RAMP DETAILS HAVE BEEN SIGNIFICANTLY MODIFIED TO CONFORM TO FEDERAL ADA STANDARDS. DO NOT USE THIS DETAIL. INSTEAD, PLEASE REFER TO CURRENT WSDOT STANDARD PLAN DETAIL F-40.

SEE: HTTP://WWW.WSDOT.WA.GOV/EESC/DESIGN/DESIGNSTANDARDS/ENGLISH/PDF/

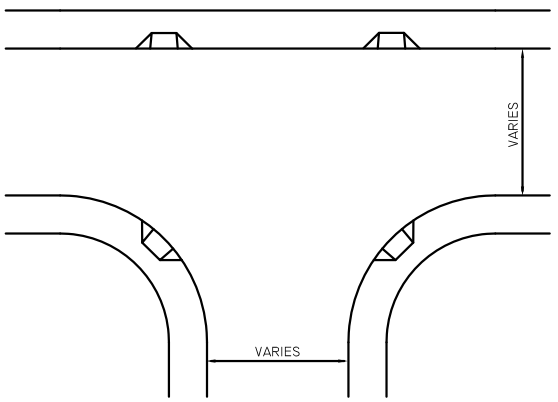

RAMP LOCATIONS

ON RESIDENTIAL ACCESS STREETS

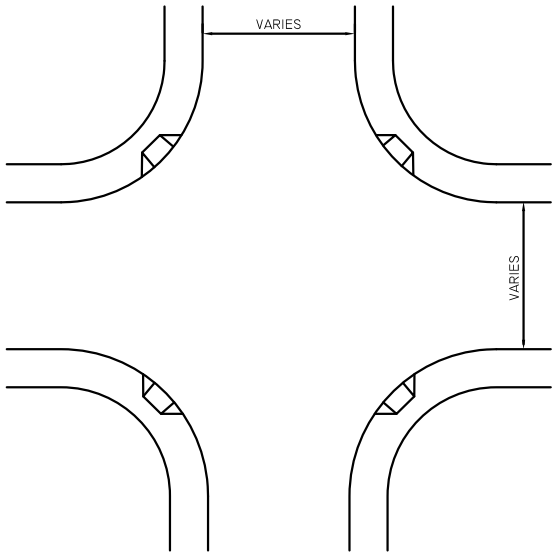

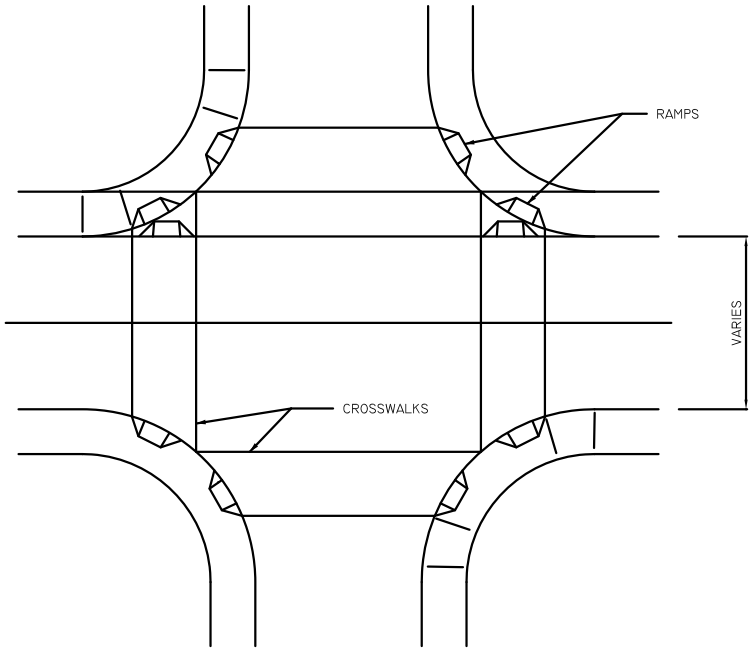

RAMP LOCATIONS

ON ARTERIALS AND COMMERCIAL ACCESS STREETS

NOTES:

1. CATCH BASIN AND INLETS SHALL BE OUTSIDE THE CURB RAMP (24" MIN. CLEARANCE FROM RAMP). SEE SEC. 3-7.05 FOR CROSSWALK RESTRICTIONS.
2. CARE SHALL BE TAKEN TO KEEP THE RAMP FROM CONFLICTING WITH HYDRANTS, POLES, INLETS, AND OTHER UTILITIES.
3. CONSTRUCT RAMP IN ACCORDANCE WITH DWG. NO. 3-4-002 OR DWG. NO. 3-4-003.
4. CROSSWALKS ARE NOT ALWAYS MARKED.
5. WHEN RAMPS ARE CONSTRUCTED ON ONE SIDE OF STREET, RAMPS SHALL BE CONSTRUCTED AT CORRESPONDING LOCATIONS ON OPPOSITE SIDE OF STREET.

City of Duvall

CURB RAMPS LOCATIONS	REVISED 5/10/07
STANDARD PLAN	3-04-001

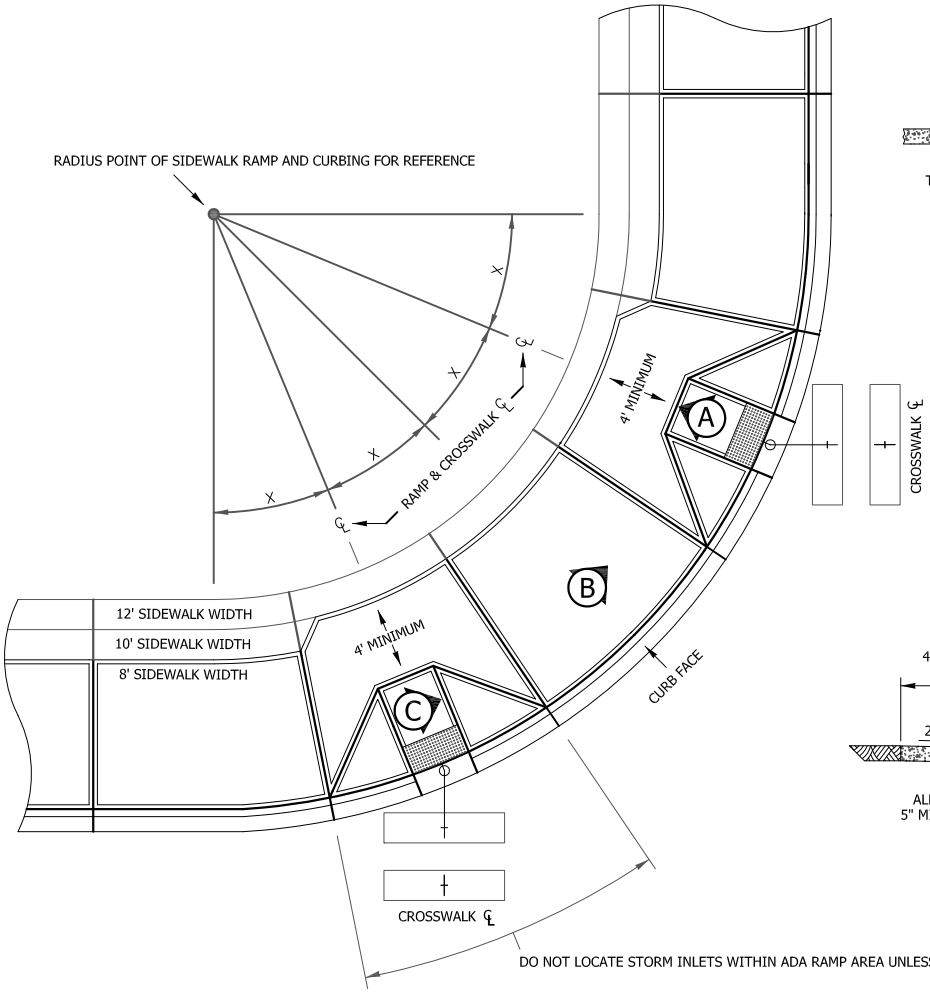

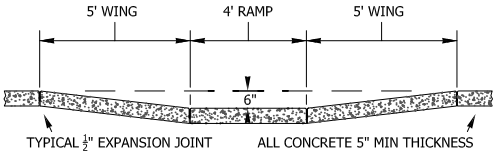

A
SECTION

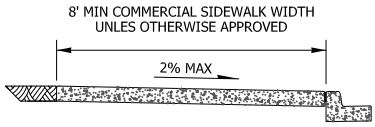

B
SECTION

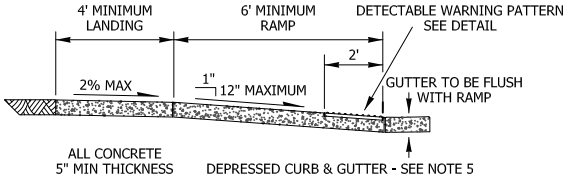

C
SECTION

DETECTABLE WARNING DETAIL

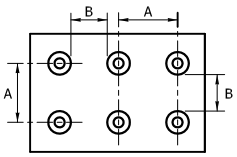

	MIN	MAX
A	$1\frac{5}{8}$"	$2\frac{3}{8}$"
B	$\frac{5}{8}$"	$1\frac{1}{2}$"
C	$\frac{7}{16}$"	$\frac{3}{4}$"
D	$\frac{7}{8}$"	$1\frac{7}{16}$"

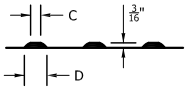

DETECTABLE WARNING DEVICE MUST BE OF AN APPROVED COLOR

DETECTABLE WARNING MATERIAL SHALL BE INCLUDED IN MATERIAL SUBMITTALS & APPROVED PRIOR TO INSTALLATION

ISOMETRIC VIEW

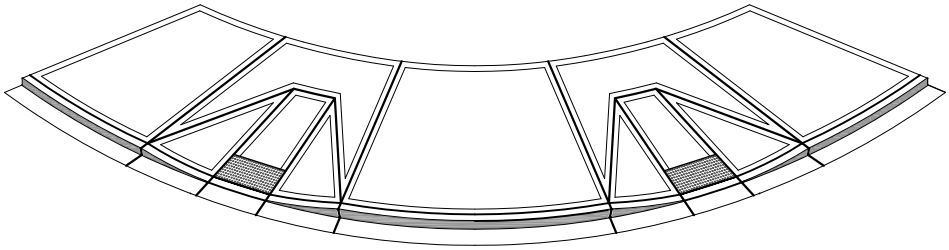

TRUNCATED DOME INSTALLATION HEIGHT MUST BE WITHIN $\frac{1}{4}$" OF CONCRETE GRADE

1. ALL COMMERCIAL RAMPS SHALL BE CONSTRUCTED TWO PER RADIUS. SET THE RAMP C_L AT THE $\frac{1}{4}$ RADIUS C_L AS SHOWN ABOVE.
2. THERE ARE 3 INSTANCES WHERE A SINGLE ADA RAMP LOCATED IN THE CENTER OF THE RADIUS WILL BE ALLOWED. THEY ARE (1) ON RESIDENTIAL STREETS. (2) WHERE STREET GRADE EXCEEDS 4%. OR (3) WHERE UTILITIES ARE IN CONFLICT.
3. ADA RAMP SHALL BE SQUARE TO CURB & ROADWAY UNLESS OTHERWISE APPROVED BY THE CITY ENGINEER AND/OR INSPECTOR.
4. ACCOMMODATION MUST BE MADE SO PROPOSED ADA RAMPS HAVE A CORRESPONDING RAMP(S) ON THE OPPOSITE SIDE OF THE STREET. IF AN EXISTING RAMP WILL NOT WORK, THEN A NEW ONE WILL HAVE TO BE CONSTRUCTED BEFORE FINAL APPROVAL.
5. RAMP SLOPES SHALL NOT EXCEED A RATIO OF 12 HORIZONTAL TO 1 VERTICAL (12H:1V).
6. RAMP & APPROACHES SHALL BE CLEAR OF OBSTACLES INCLUDING HYDRANTS, POLES, & DRAINS.
7. SEE PLANS FOR SPECIFIED CURB AND GUTTER STYLE (VERTICAL, ROLLED, OR INTEGRAL POUR).
8. FELT EXPANSION JOINTS SHALL BE 2" BY $\frac{1}{2}$" THICK.
9. FOR WIDTHS OF SIDEWALK REFER TO SECTION 3-3.02.
10. FOR CURB & SIDEWALK JOINTS REFER TO STANDARD DRAWING 3-03-006.

DUVALL DESIGN STANDARDS: 2007

REVISION	BY	DATE
NEW FORMAT	DLC	03-23-11

City of Duvall

TYPE I COMMERCIAL
8' OR GREATER SIDEWALK WIDTHS

DRAWING NUMBER 3-04-002

F:\Public Works\Development Guidelines\DDS Manual\2009 Update\Details\DWG\3-04-002 ADA Ramps (COMMERCIAL WITHOUT PLANTER) DC.dwg]

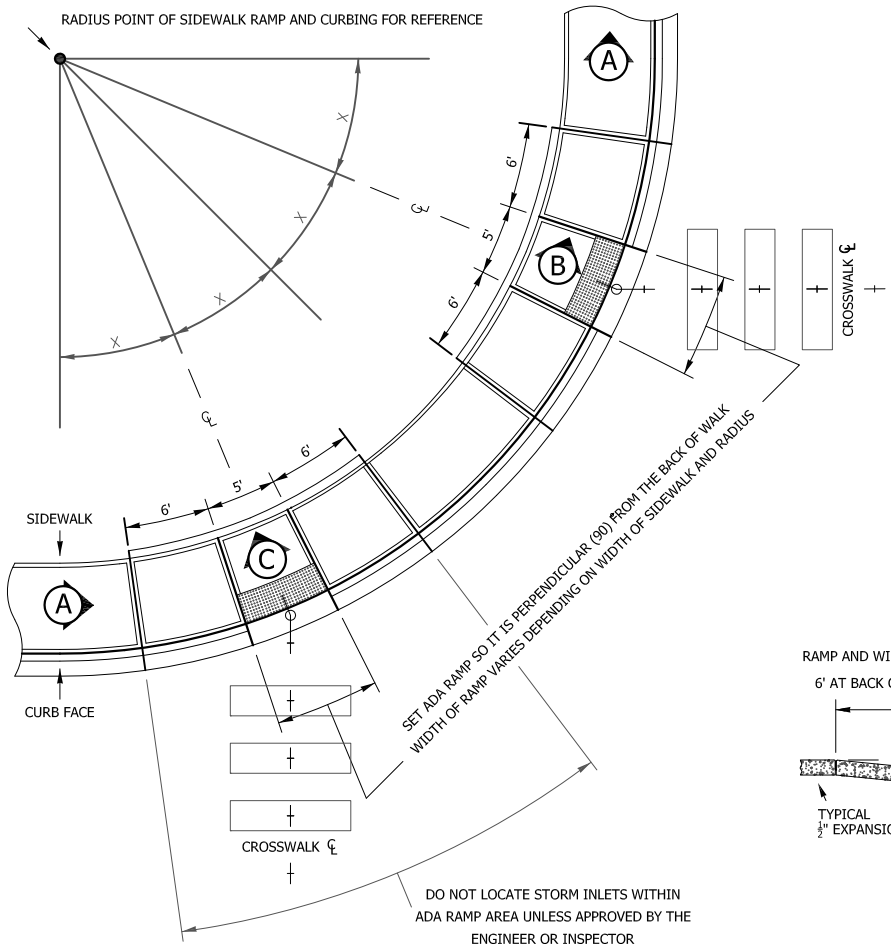

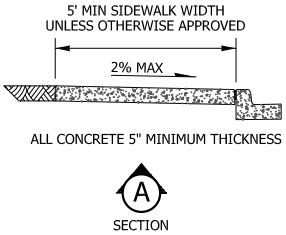

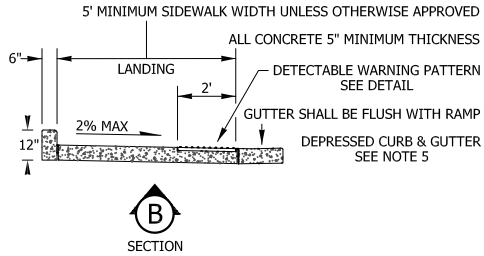

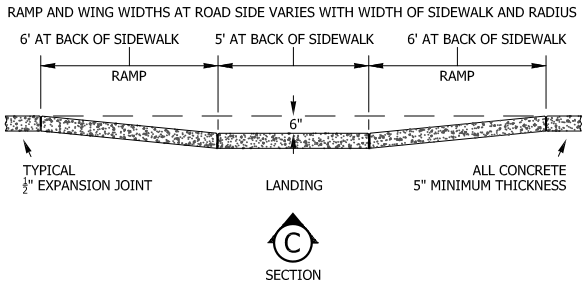

DETECTABLE WARNING DETAIL

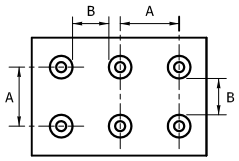

	MIN	MAX
A	$1\frac{5}{8}$"	$2\frac{3}{8}$"
B	$\frac{5}{8}$"	$1\frac{1}{2}$"
C	$\frac{7}{16}$"	$\frac{3}{4}$"
D	$\frac{7}{8}$"	$1\frac{7}{16}$"

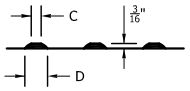

DETECTABLE WARNING DEVICE MUST BE OF AN APPROVED COLOR

ISOMETRIC VIEW

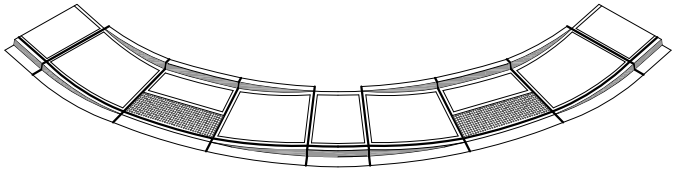

DETECTABLE WARNING MATERIAL SHALL BE INCLUDED IN MATERIAL SUBMITTALS & APPROVED PRIOR TO INSTALLATION

TRUNCATED DOME INSTALLATION HEIGHT MUST BE WITHIN $\frac{1}{4}$" OF CONCRETE GRADE

1. CURB RAMPS SHALL BE CONSTRUCTED TWO PER RADIUS ON ALL MAIN AND ARTERIAL STREETS. IF CONSTRUCTING TWO PER RADIUS, SET THE RAMP C_L AT THE $\frac{1}{4}$ RADIUS C_L AS SHOWN ABOVE.
2. THERE ARE 3 INSTANCES WHERE A SINGLE ADA RAMP LOCATED IN THE CENTER OF THE RADIUS WILL BE ALLOWED. THEY ARE (1) ON RESIDENTIAL STREETS. (2) WHERE STREET GRADE EXCEEDS 4%. OR (3) WHERE UTILITIES ARE IN CONFLICT.
3. ADA RAMP SHALL BE SQUARE TO CURB & ROADWAY UNLESS OTHERWISE APPROVED BY THE CITY ENGINEER AND/OR INSPECTOR.
4. ACCOMMODATION MUST BE MADE SO PROPOSED ADA RAMPS HAVE A CORRESPONDING RAMP(S) ON THE OPPOSITE SIDE OF THE STREET. IF AN EXISTING RAMP WILL NOT WORK, THEN A NEW ONE WILL HAVE TO BE CONSTRUCTED BEFORE FINAL APPROVAL.
5. RAMP SLOPES SHALL NOT EXCEED A RATIO OF 12 HORIZONTAL TO 1 VERTICAL (12H:1V).
6. RAMP & APPROACHES SHALL BE CLEAR OF OBSTACLES INCLUDING HYDRANTS, POLES, & DRAINS.
7. SEE PLANS FOR SPECIFIED CURB AND GUTTER STYLE (VERTICAL, ROLLED, OR INTEGRAL POUR).
8. FELT EXPANSION JOINTS SHALL BE 2" BY $\frac{1}{2}$" THICK.
9. FOR WIDTHS OF SIDEWALK REFER TO SECTION 3-3.02.
10. FOR CURB & SIDEWALK JOINTS REFER TO STANDARD DRAWING 3-03-006.

DUVALL DESIGN STANDARDS: 2007

REVISION	BY	DATE
NEW FORMAT	DLC	03-24-11

City of Duvall

TYPE II CURB RAMPS FOR USE WITHOUT LANDSCAPE STRIP

DRAWING NUMBER 3-04-003

F:\Public Works\Development Guidelines\DDS Manual\2009 Update\Details\DWG\3-04-003 ADA Ramps (WITHOUT PLANTER STRIP) DC.dwg]

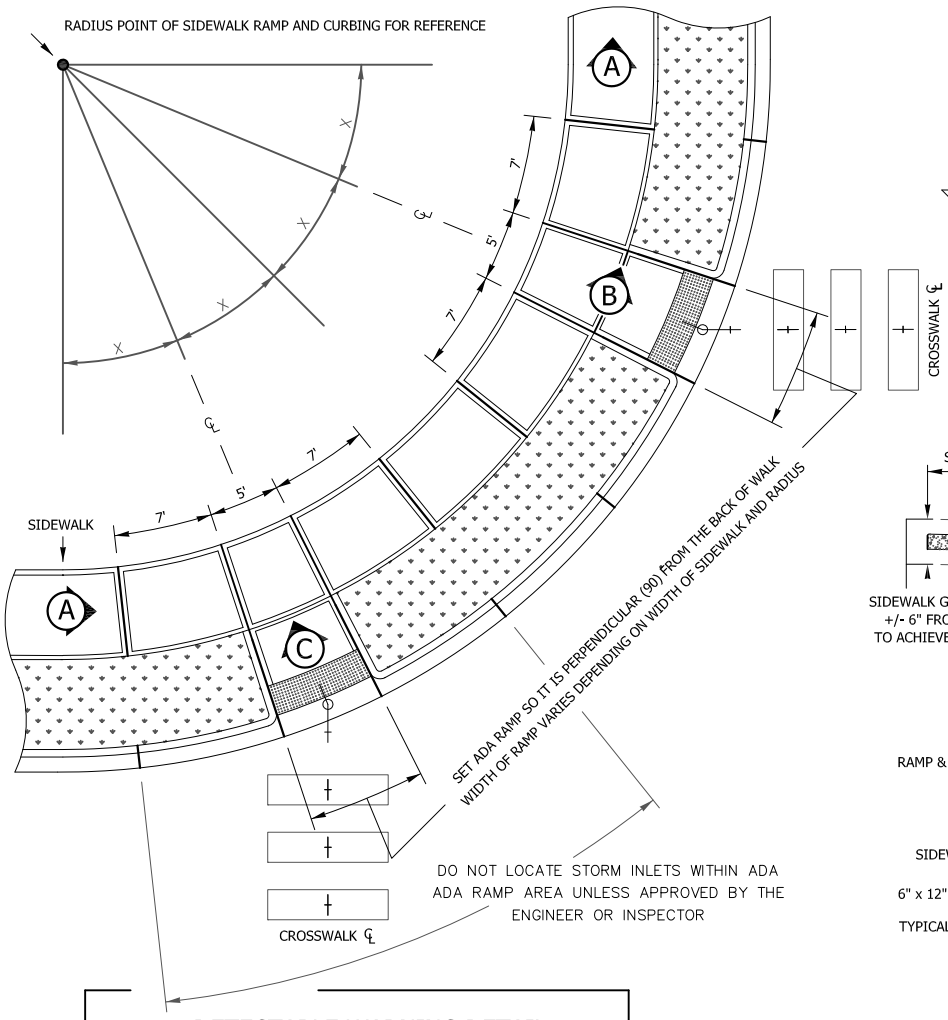

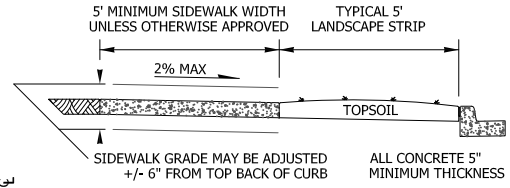

A
SECTION

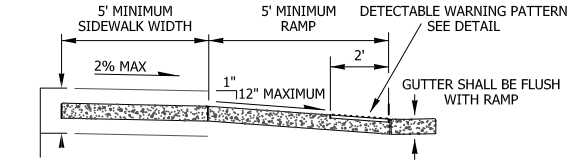

B
SECTION

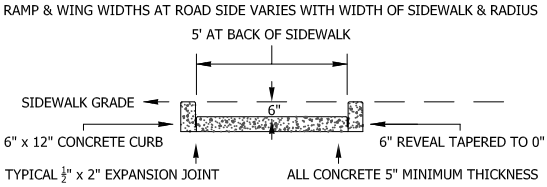

C
SECTION

DETECTABLE WARNING DETAIL

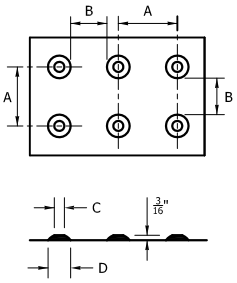

	MIN	MAX
A	$1\frac{5}{8}$"	$2\frac{3}{8}$"
B	$\frac{5}{8}$"	$1\frac{1}{2}$"
C	$\frac{7}{16}$"	$\frac{3}{4}$"
D	$\frac{7}{8}$"	$1\frac{7}{16}$"

DETECTABLE WARNING DEVICE MUST BE OF AN APPROVED COLOR

DETECTABLE WARNING MATERIAL SHALL BE INCLUDED IN MATERIAL SUBMITTALS & APPROVED PRIOR TO INSTALLATION

ISOMETRIC VIEW

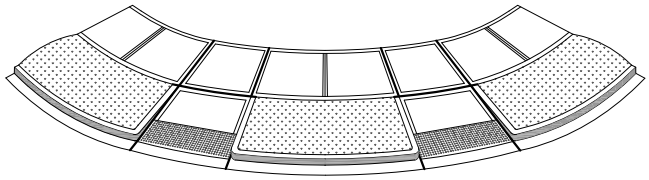

TRUNCATED DOME INSTALLATION HEIGHT MUST BE WITHIN $\frac{1}{4}$" OF CONCRETE GRADE

1. CURB RAMPS SHALL BE CONSTRUCTED TWO PER RADIUS ON ALL MAIN AND ARTERIAL STREETS. IF CONSTRUCTING TWO PER RADIUS, SET THE RAMP C_L AT THE $\frac{1}{4}$ RADIUS C_L AS SHOWN ABOVE.
2. THERE ARE 3 INSTANCES WHERE A SINGLE ADA RAMP LOCATED IN THE CENTER OF THE RADIUS WILL BE ALLOWED. THEY ARE (1) ON RESIDENTIAL STREETS. (2) WHERE STREET GRADE EXCEEDS 4%. OR (3) WHERE UTILITIES ARE IN CONFLICT.
3. ADA RAMP SHALL BE SQUARE TO CURB & ROADWAY UNLESS OTHERWISE APPROVED BY THE CITY ENGINEER AND/OR INSPECTOR.
4. ACCOMMODATION MUST BE MADE SO PROPOSED ADA RAMPS HAVE A CORRESPONDING RAMP(S) ON THE OPPOSITE SIDE OF THE STREET. IF AN EXISTING RAMP WILL NOT WORK, THEN A NEW ONE WILL HAVE TO BE CONSTRUCTED BEFORE FINAL APPROVAL.
5. RAMP SLOPES SHALL NOT EXCEED A RATIO OF 12 HORIZONTAL TO 1 VERTICAL (12H:1V).
6. RAMP & APPROACHES SHALL BE CLEAR OF OBSTACLES INCLUDING HYDRANTS, POLES, & DRAINS.
7. SEE PLANS FOR SPECIFIED CURB AND GUTTER STYLE (VERTICAL, ROLLED, OR INTEGRAL POUR).
8. FELT EXPANSION JOINTS SHALL BE 2" BY $\frac{1}{2}$" THICK.
9. FOR WIDTHS OF SIDEWALK REFER TO SECTION 3-3.02.
10. FOR CURB & SIDEWALK JOINTS REFER TO STANDARD DRAWING 3-03-006.

DUVALL DESIGN STANDARDS: 2007

REVISION	BY	DATE
NEW FORMAT	DLC	03-24-11

City of Duvall

TYPE III CURB RAMPS FOR USE WITH LANDSCAPE STRIP

DRAWING NUMBER 3-04-004

F:\Public Works\Development Guidelines\DDS Manual\2009 Update\Details\DWG\3-04-003 ADA Ramps (WITHOUT PLANTER STRIP) DC.dwg]

FOR AREAS WITHOUT PLANTER STRIP, OMIT ASSOCIATED CURBING AS SHOWN IN THE ISOMETRIC VIEW BELOW

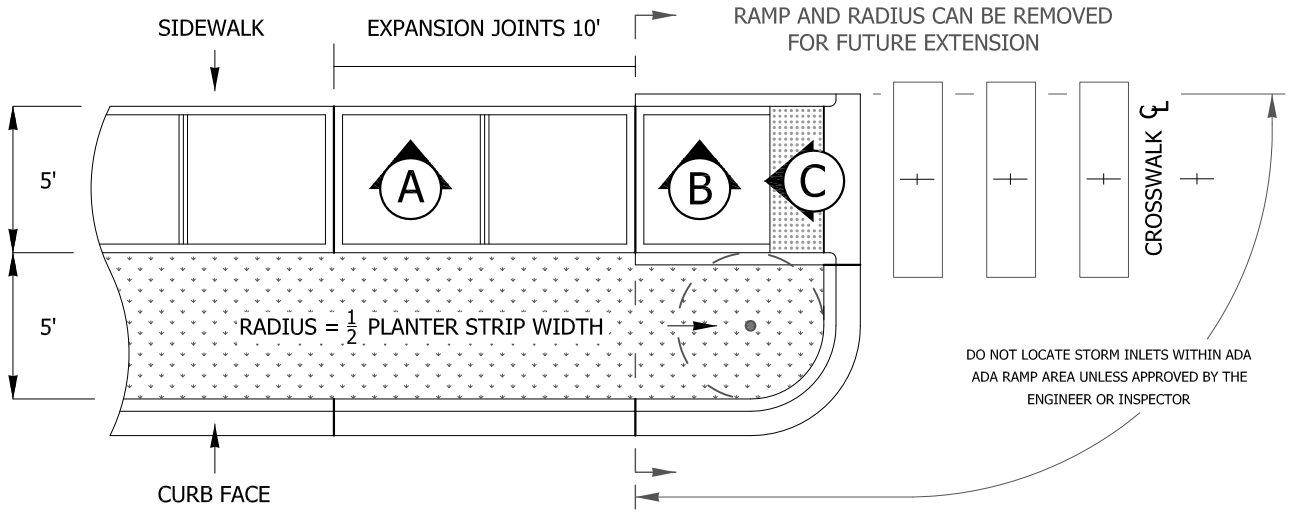

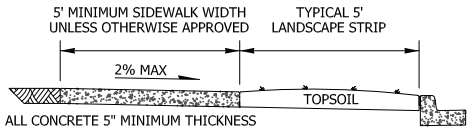

A SECTION

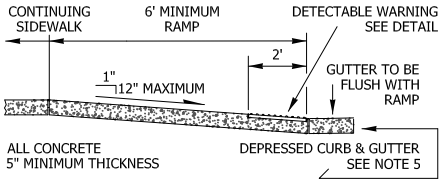

B SECTION

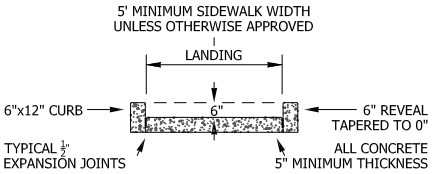

C SECTION

DETECTABLE WARNING DETAIL

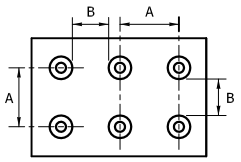

	MIN	MAX
A	$1\frac{5}{8}$"	$2\frac{3}{8}$"
B	$\frac{5}{8}$"	$1\frac{1}{2}$"
C	$\frac{7}{16}$"	$\frac{3}{4}$"
D	$\frac{7}{8}$"	$1\frac{7}{16}$"

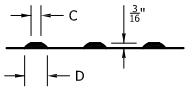

DETECTABLE WARNING DEVICE MUST BE OF AN APPROVED COLOR

TRUNCATED DOME INSTALLATION HEIGHT MUST BE WITHIN $\frac{1}{4}$" OF CONCRETE GRADE

DETECTABLE WARNING MATERIAL SHALL BE INCLUDED IN MATERIAL SUBMITTALS AND BE APPROVED BY CITY INSPECTOR PRIOR TO INSTALLATION

ISOMETRIC VIEW

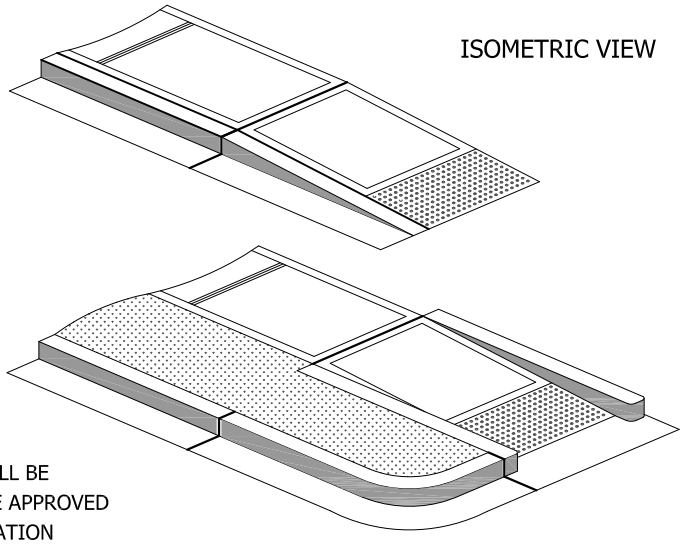

1. RAMP SLOPES SHALL NOT EXCEED 12 HORIZONTAL TO 1 VERTICAL (12H:1V)
2. RAMP & APPROACHES SHALL BE CLEAR OF OBSTACLES INCLUDING HYDRANTS, POLES, & DRAINS.
3. SEE PLANS FOR SPECIFIED CURB & GUTTER STYLE (VERTICAL, ROLED, OR INTERGAL POUR)
4. FELT EXPANSION JOINTS SHALL BE 2" BY $\frac{1}{2}$" THICK
5. FOR WIDTHS OF SIDEWALK SEE SECTION 3-3.02
6. FOR CURB AND SIDEWALK JOINTS SEE STANDARD DRAWING 3-03-006
7. ADA RAMP SHALL BE SQUARE TO CURB & ROADWAY UNLESS OTHERWISE APPROVED BY THE CITY ENGINEER AND/OR INSPECTOR
8. ACCOMODATION MUST BE MADE SO PROPOSED ADA RAMPS HAVE A CORRESPONDING RAMP(S) ON THE OPPOSITE SIDE OF THE STREET. IF AN EXISTING RAMP WILL NOT WORK, THEN A NEW ONE WILL HAVE TO BE CONSTRUCTED BEFORE FINAL APPROVAL.

DUVALL DESIGN STANDARDS: 2007

REVISION	BY	DATE
NEW FORMAT	DLC	03-24-11

City of Duvall

SIDEWALK END RAMP & LANDSCAPE STRIP CLOSURE

DRAWING NUMBER 3-04-005

F:\Public Works\Development Guidelines\DDS Manual\2009 Update\Details\DWG\3-04-005 ADA Ramps (END RAMP DETAILS) DC.dwg]

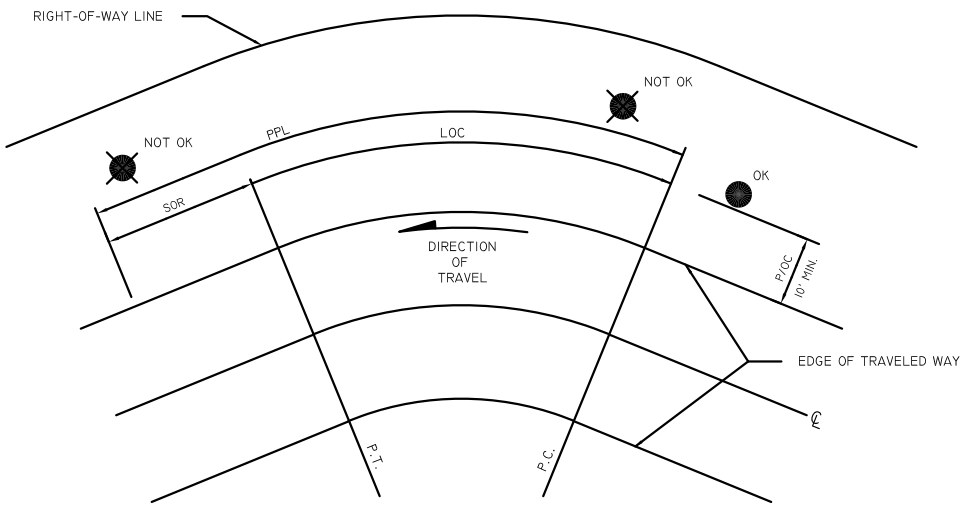

OUTSIDE OF CURVE
POSTED 40 MPH & OVER

LOC: LENGTH OF CURVE (FEET) AT EDGE OF TRAVELED WAY FROM P.C. TO P.T.

SOR: SAFETY OVERRUN (FEET) BEYOND P.T.

PPL: PROHIBITED POLE LOCATION (FEET) (LOC + SOR) WHERE POLES OR OBSTACLES MUST BE REMOVED OR BARRICADED.

PPL (FEET) ON OUTSIDE OF CURVES WITH POSTED SPEED LIMIT OF 40 MPH & OVER.	
40 MPH	LOC + 220 (SOR)
45	LOC + 255
50	LOC + 290
55	LOC + 325

APPLIES TO ROADWAY WITH SHOULDER OR MOUNTABLE CURB ON OUTSIDE OF CURVE, WITH:

-RADIUS LESS THAN 3500', AND

-POSTED SPEED GREATER THAN OR EQUAL TO 40 M.P.H.

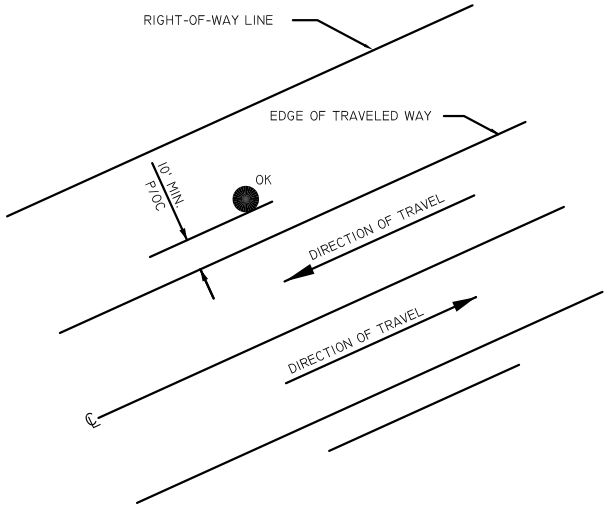

GENERAL CASE

P/OC: POLE/OBSTACLE CLEARANCE TO NEAREST FACE OF POLE/OBSTACLE.

APPLIES: TO ROADWAY WITH SHOULDER OR MOUNTABLE CURB ON:

1. TANGENT, OR
2. INSIDE OF CURVE, OR
3. OUTSIDE OF CURVE, EITHER WITH
   - -POSTED SPEED LESS THAN 40 MPH OR
   - -RADIUS GREATER THAN 3500' ON ROADWAY MEETING ALL CURRENT DESIGN STANDARDS.

NOTES:

1. THE STANDARDS SHALL APPLY TO EVERY NEW PLACEMENT AND EVERY PLANNED, NON-EMERGENCY REPLACEMENT OF EXISTING POLES AND OTHER UTILITY STRUCTURES WITHIN KING COUNTY RIGHT-OF-WAY.
2. NO POLES MAY BE REPLACED ON THE OUTSIDE OF A CURVE WITH A POSTED SPEED LIMIT OF 40 MPH OR OVER UNLESS APPROVED THROUGH A VARIANCE REQUEST.
3. SEE SECS. 3-5.11 & 3-8.02G.

City of Duvall

CLEARANCE OF ROADSIDE OBSTACLES ON SHOULDER TYPE ROAD	REVISED 5/10/07
STANDARD PLAN	3-05-001

PROFILE

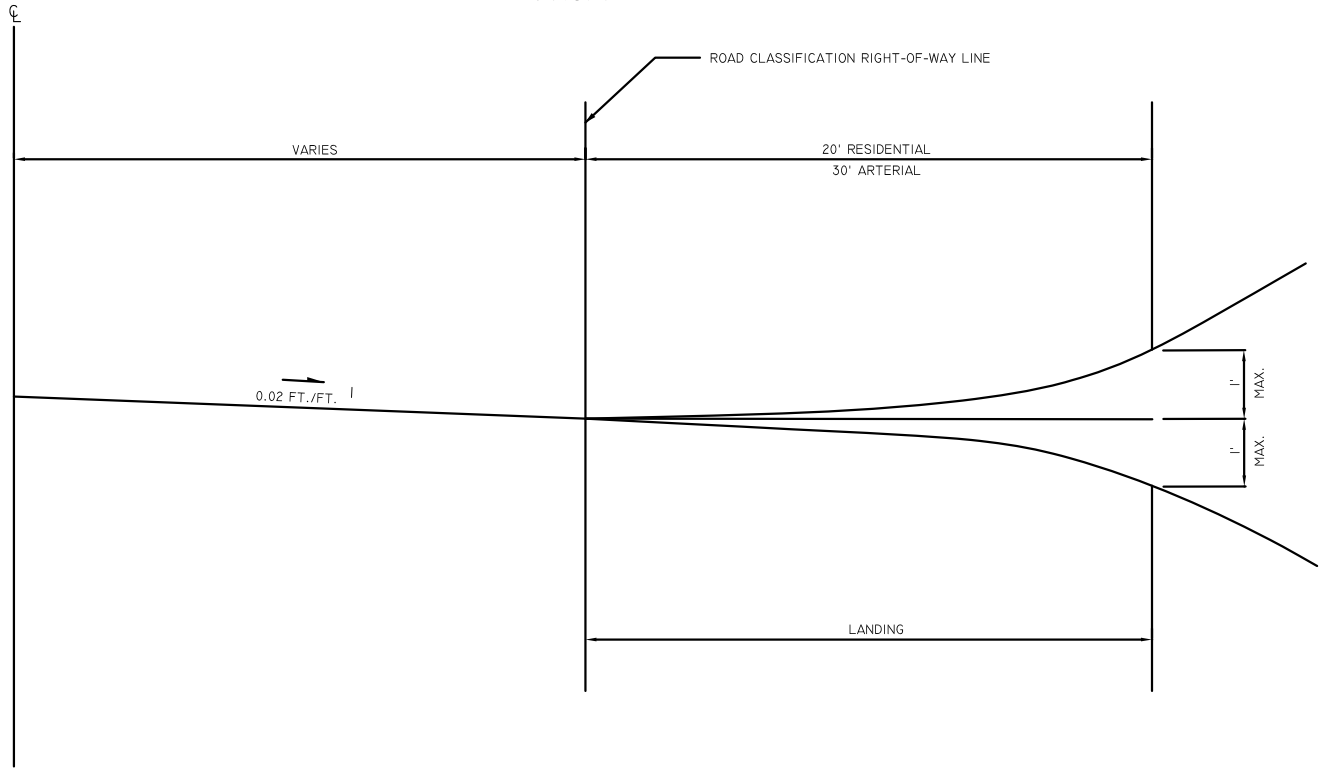

NOTES:

1. SEE SECS. 3-2.02, 3-2.03 OR 3-2.04 FOR SUPERELEVATION REQUIREMENTS.
2. SEE SEC. 3-2.10 FOR LANDING REQUIREMENTS.

City of Duvall

INTERSECTION LANDING PROFILE	REVISED 5/10/07
STANDARD PLAN	3-05-002

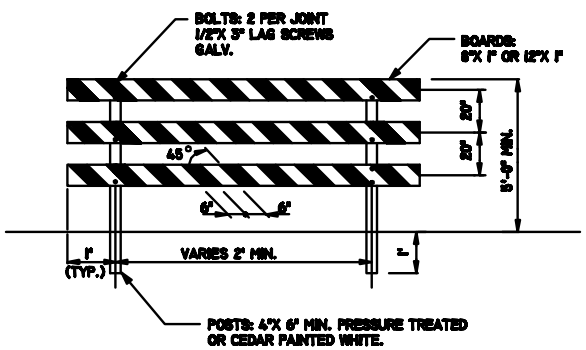

FIXED (PERMANENT)
TYPE III BARRICADE

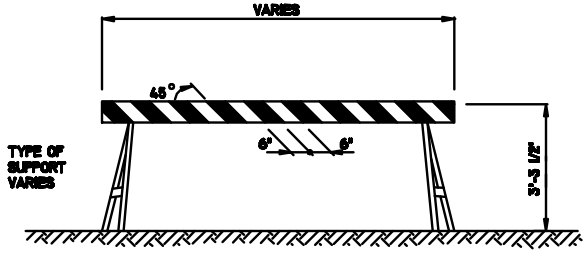

TYPE I BARRICADE

MOVABLE (TEMPORARY)
TYPE III BARRICADE

STRIPE NOTES:

ORANGE & WHITE IF TEMPORARY.
RED & WHITE IF PERMANENT.
REFLECTORIZED
SLANT DOWNWARD, RIGHT OR LEFT,
IN DIRECTION TRAFFIC WILL PASS.
SLANT BOTH DIRECTIONS FROM MIDDLE
IF TRAFFIC PASSES BOTH ENDS.
WIDTH 6" EXCEPT 4" IF RAILS ARE
LESS THAN 3' LONG.
SLANT DOWNWARD TO MIDDLE AT END
OF CLOSED ROAD.

SEE SEC. 3-5.07 AND MUTCD SEC.6 C-8

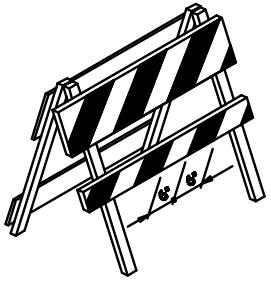

TYPE II BARRICADE

BARRICADE NOTES:			
TYPE	I	II	III
WIDTH OF RAIL	8" MIN. 12" MAX.	8" MIN. 12" MAX.	8" MIN. 12" MAX.
LENGTH OF RAIL	2' MIN.	2' MIN.	4' MIN.
HEIGHT	3' MIN.	3' MIN.	5' MIN.
TYPE OF FRAME	DEMOUNTABLE OR HEAVY "A"	LIGHT "A" FRAME	POST OR SKIDS
FLEXIBILITY	ESSENTIALLY MOVABLE	PORTABLE	ESSENTIALLY PERMANENT

NOTE:
FOR DIMENSIONS NOT
SHOWN, SEE TABLE.

City of Duvall

BARRICADES

REVISED
5/10/07

STANDARD PLAN

3-05-003

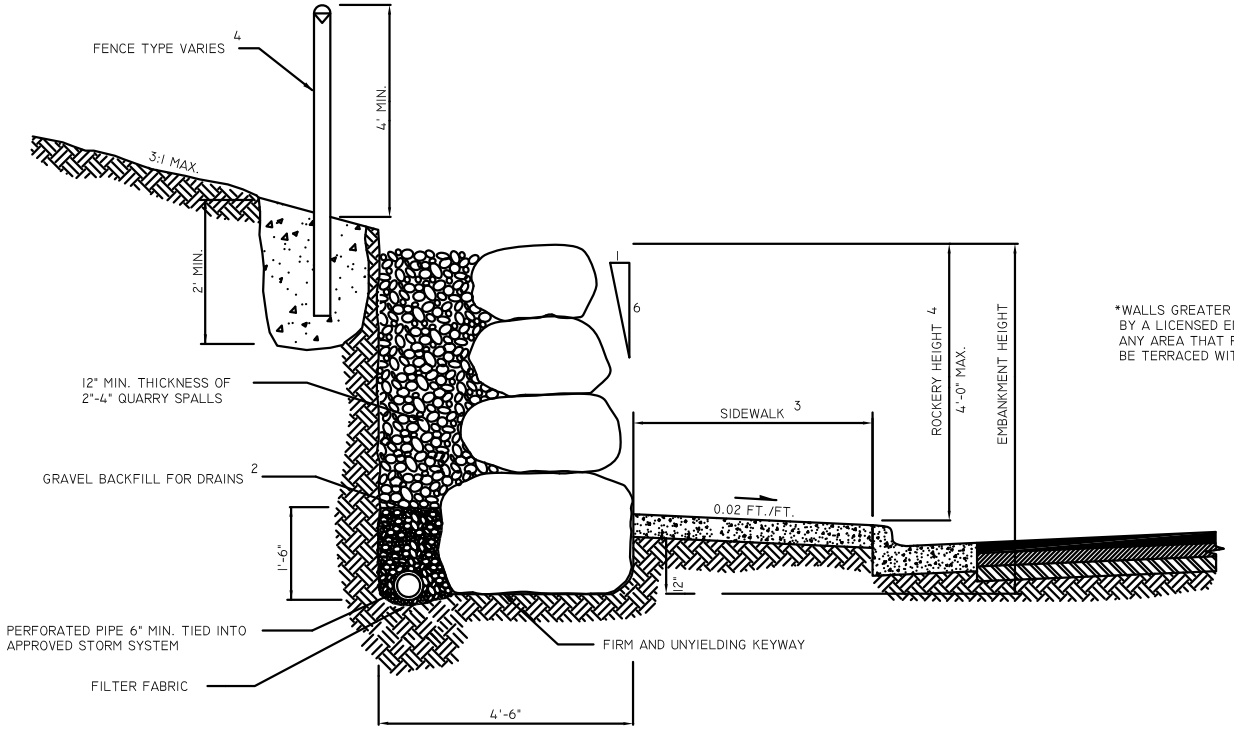

*WALLS GREATER THAN 4' IN HEIGHT MUST BE DESIGNED BY A LICENSED ENGINEER AND APPROVED BY THE CITY ENGINEER. ANY AREA THAT REQUIRES A WALL SYSTEM OVER THE 4' MUST BE TERRACED WITH A MINIMUM 4' BETWEEN WALLS.

NOTES:

1. SEE SEC. 3-5.01.
2. WSDOT/APWA 9-03.12[4]
3. IF ROCKERY OR RETAINING WALL IS BEHIND ROLLED CURB OR ON A RURAL SECTION, FACE OF ROCKERY OR RETAINING WALL MUST BE A MIN. OF 10' FROM TRAVELED WAY.
4. FENCE TYPE SHALL BE AT THE DISCRETION OF THE CITY ENGINEER BUT AT A MINIMUM THE FENCE SHALL BE CHAIN LINK FENCE, TYPE NO. 4 OR 6 (WSDOT/APWA STANDARD), REQUIRED WHEN ROCKERY HEIGHT IS THREE FEET OR GREATER.

City of Duvall

ROCK FACING CUT SECTION	REVISED 5/10/07
STANDARD PLAN	3-05-004

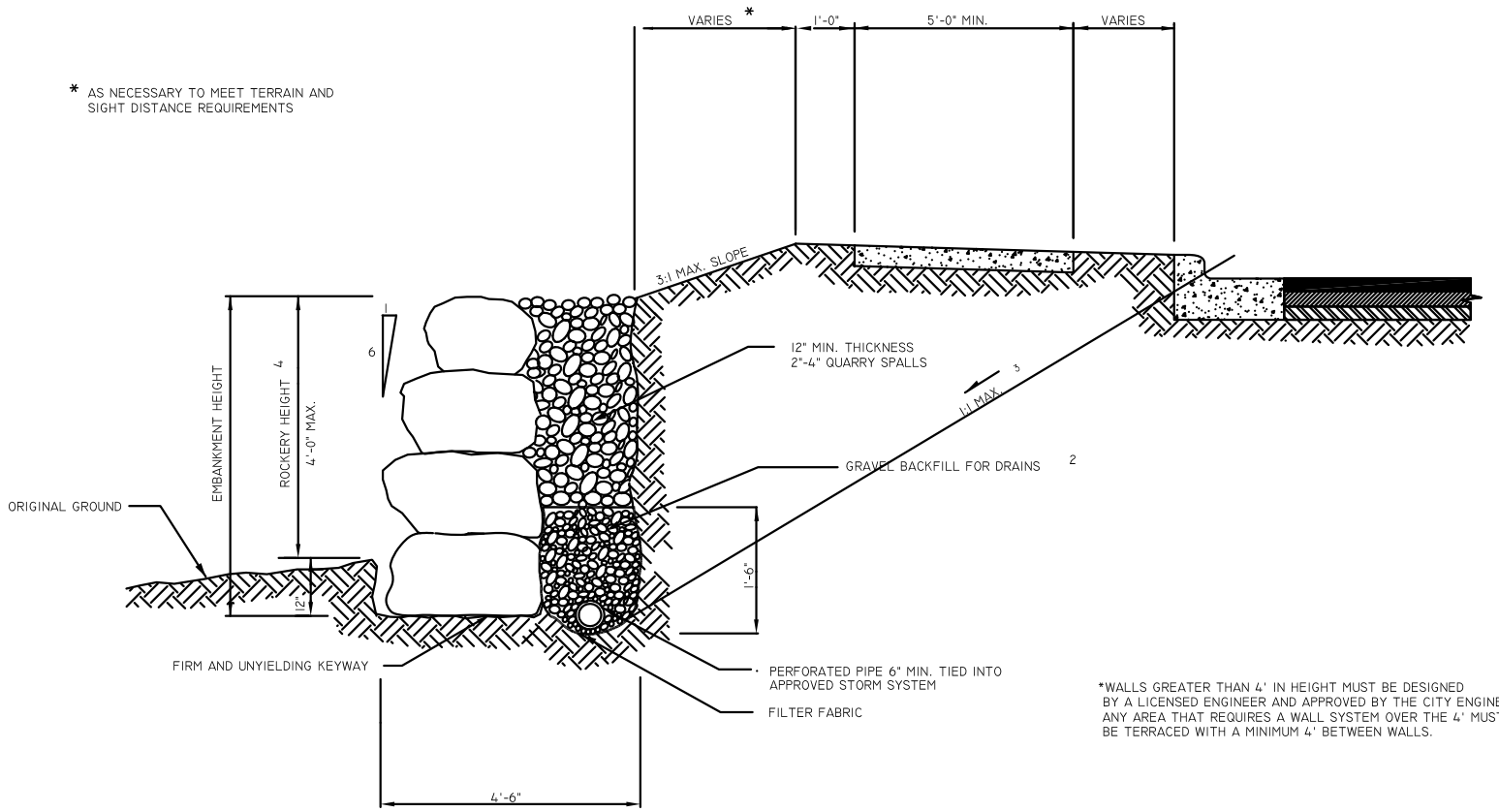

*WALLS GREATER THAN 4' IN HEIGHT MUST BE DESIGNED BY A LICENSED ENGINEER AND APPROVED BY THE CITY ENGINEER. ANY AREA THAT REQUIRES A WALL SYSTEM OVER THE 4' MUST BE TERRACED WITH A MINIMUM 4' BETWEEN WALLS.

NOTES:

1. SEE SEC. 3-5.01.
2. WSDOT/APWA 9-03.12[4].
3. NO STRUCTURES ABOVE 1:1 MAX ENVELOPE, FLATTER SLOPE MAY BE REQUIRED IN LESS STABLE SOIL.
4. IF ROCKERY OR RETAINING WALL IS BEHIND ROLLED CURB OR ON A RURAL SECTION, FACE OF ROCKERY OR RETAINING WALL MUST BE A MIN. OF 10' FROM TRAVELED WAY.
5. FOR ROCKERY HEIGHTS EXCEEDING 4', SEE DWG. NO. 3-5-007.
6. TRAFFIC BARRIERS MAY BE REQUIRED ON ROADS WITH SPEED LIMITS OF 40 MPH OR GREATER.
7. FENCE TYPE SHALL BE AT THE DISCRETION OF THE CITY ENGINEER BUT AT A MINIMUM THE FENCE SHALL BE CHAIN LINK FENCE, TYPE NO. 4 OR 6 (WSDOT/APWA STANDARD), REQUIRED WHEN ROCKERY HEIGHT IS THREE FEET OR GREATER.

City of Duvall

ROCK FACING, FILL SECTION	REVISED 5/10/07
STANDARD PLAN	3-05-005

*WALLS GREATER THAN 4' IN HEIGHT MUST BE DESIGNED BY A LICENSED ENGINEER AND APPROVED BY THE CITY ENGINEER. ANY AREA THAT REQUIRES A WALL SYSTEM OVER THE 4' MUST BE TERRACED WITH A MINIMUM 4' BETWEEN WALLS.

*AS NECESSARY TO MEET TERRAIN AND SIGHT DISTANCE REQUIREMENTS.

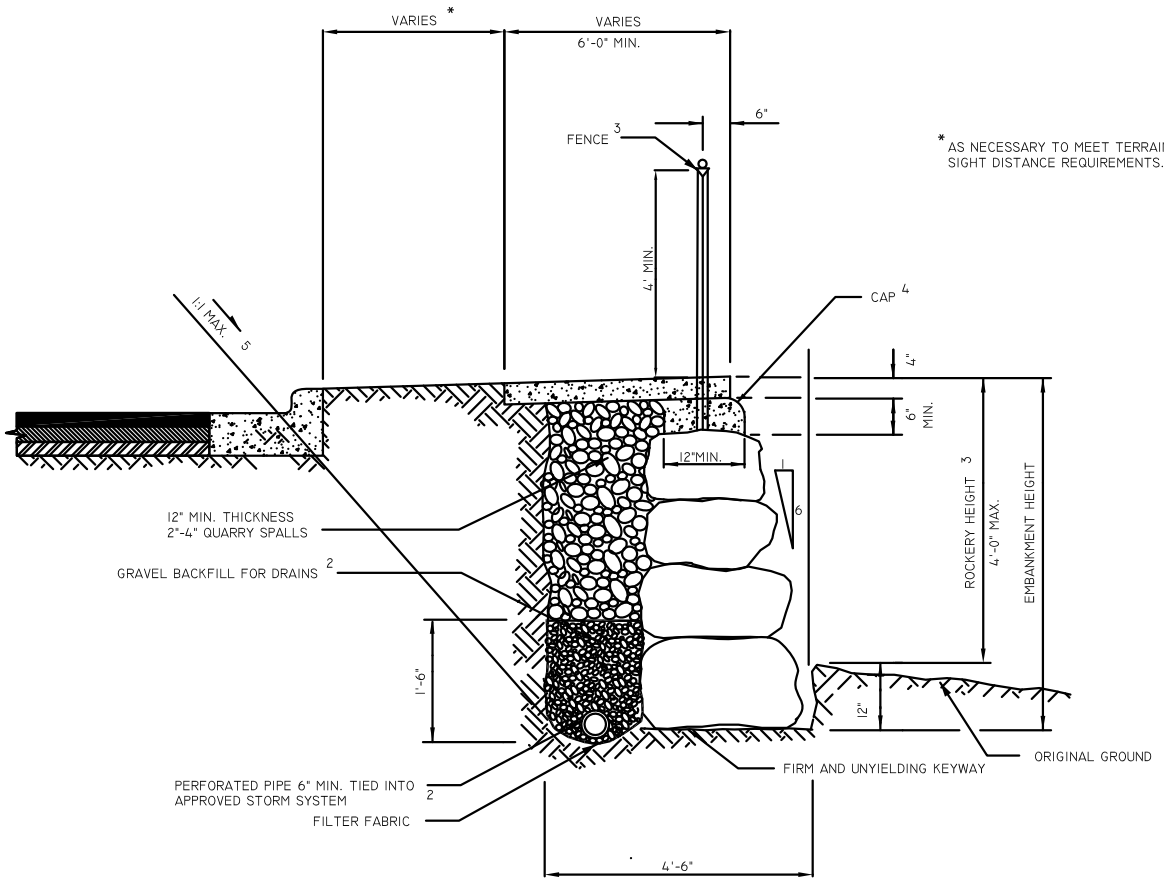

NOTES:

1. SEE SEC 3-5.01.
2. WSDOT/APWA 9-03.12[4].
3. FENCE TYPE SHALL BE AT THE DISCRETION OF THE CITY ENGINEER BUT AT A MINIMUM THE FENCE SHALL BE CHAIN LINK FENCE, TYPE NO. 4 OR 6 (WSDOT/APWA STANDARD), REQUIRED WHEN ROCKERY HEIGHT IS THREE FEET OR GREATER.
4. CAP SHALL BE CONCRETE CLASS 3000.
5. NO STRUCTURES ABOVE 1:1 MAX ENVELOPE, FLATTER SLOPE MAY BE REQUIRED IN LESS STABLE SOILS.
6. FOR ROCKERY HEIGHTS EXCEEDING 4', SEE DWG. NO. 3-5-007.
7. TRAFFIC BARRIERS MAY BE REQUIRED ON ROADS WITH SPEED LIMITS OF 40 MPH OR GREATER, WHERE HEIGHTS EXCEED 6'. SEE CHAPTER 7 OF THE WSDOT DESIGN MANUAL.
8. IF ROCKERY OR RETAINING WALL IS BEHIND ROLLED CURB OR ON A RURAL SECTION, FACE OF ROCKERY OR RETAINING WALL MUST BE A MIN. OF 10' FROM TRAVELED WAY.

City of Duvall

ROCK FACING, UNDER SIDEWALK	REVISED 5/10/07
STANDARD PLAN	3-05-006

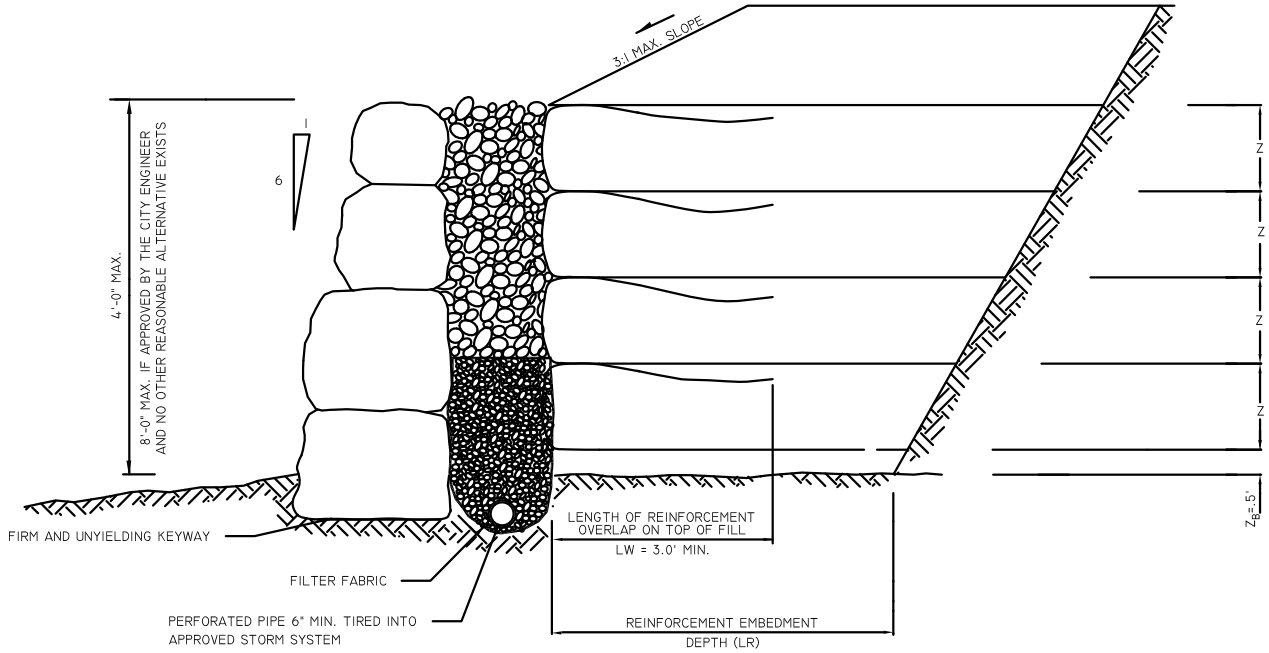

NOTES:

1. ROCKERY FACINGS ARE TO BE CONSTRUCTED TO CITY OF DUVALL ROAD STANDARDS. SEE SEC. 3.5.01 AND DWGS. NO. 3-5-004 THROUGH 3-5-006.
2. THE WALL FOUNDATION IS TO BE CLEARED OF ORGANIC MATTER AND DEBRIS AND THE UNDERLYING MINERAL SOIL COMPACTED TO 95 PERCENT OF THE MAX. DRY DENSITY. THE EMBANKMENT MATERIAL IS TO BE GRAVEL BORROW MEETING THE REQUIREMENTS OF 9-03.14 OF THE WSDOT STANDARDS. THE BACKFILL IS TO BE PLACED IN THIN LIFTS, NOT EXCEEDING SIX INCHES IN THICKNESS AND COMPACTED TO 95 PERCENT OF THE MAX. DRY DENSITY.
3. GEOSYNTHETIC FABRIC OR GEOGRID REQUIREMENTS INCLUDING TYPE, VERTICAL SPACING (Z), AND EMBEDMENT (LR), WILL BE DETERMINED ON A ROCKERY BY ROCKERY BASIS BY A PROFESSIONAL ENGINEER.
4. Z_B IS HEIGHT OF FIRST LAYER OF REINFORCEMENT ABOVE COMPACTED SUBGRADE ELEVATION.
5. EMBANKMENTS BEHIND ROCKERIES EXCEEDING 4' IN HEIGHT SHALL BE REINFORCED WITH GEOSYNTHETIC FABRIC OR GEOGRID.
6. TYPICALLY WALLS SHALL BE NO TALLER THAN 4' AND IF WALLS ARE REQUIRED TO BE GREATER THAN 4' IN HEIGHT THEY SHALL BE TERRACED. WALLS GREATER THAN 4', NOT TERRACED SHALL ONLY BE ALLOWED IF NO OTHER REASONABLE ALTERNATIVE EXISTS AND UPON APPROVED ENGINEER DESIGN.

City of Duvall

ROCK FACING, FILL SECTION REINFORCEMENT	REVISED 5/10/07
STANDARD PLAN	3-05-007

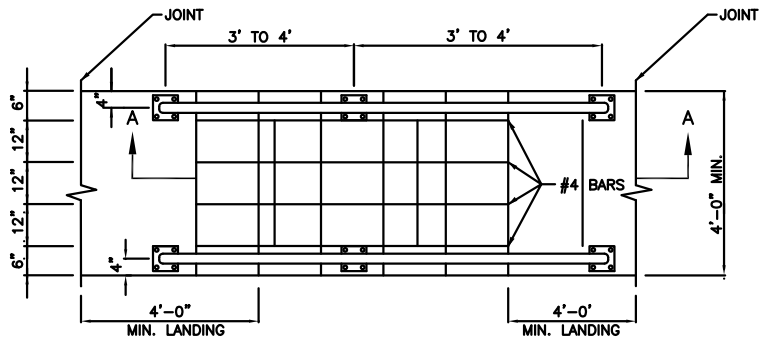

CONCRETE STEPS
PLAN

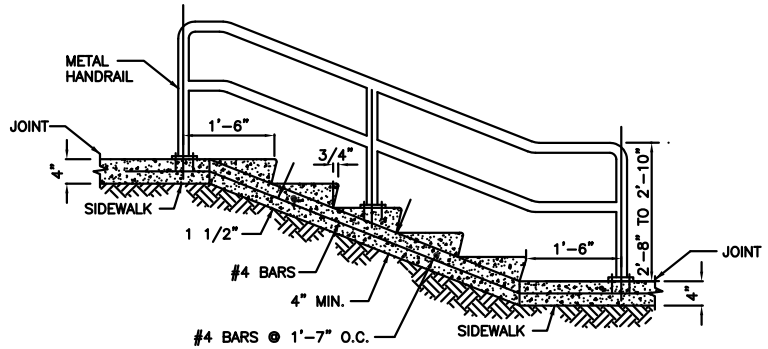

CONCRETE STEPS
SECTION A-A

NOTES FOR CONCRETE STEPS:

1. CONCRETE: CEMENT CONCRETE CLASS 3000.
2. ALL STEPS: SAME DIMENSIONS, WITHIN 3/8" MAX. DIFFERENCE.
3. RISERS: 7 1/2" MAX., 5" MIN.
4. TREADS: 12" MAX., 11" MIN., WITH TRANSVERSE 0.01 FT./FT. SLOPE.
5. METAL HANDRAIL REQUIRED FOR 4 STEPS OR MORE. SEE NOTES BELOW.
6. REINFORCING BARS SHALL MEET THE REQUIREMENTS OF ASTM A-615, GRADE 60 AND ARE REQUIRED FOR 4 STEPS OR MORE.
7. SEE SEC. 3-3.06.
8. MAX. VERTICAL DISTANCE BETWEEN LANDINGS IS 12'.

NOTES FOR HANDRAILS:

1. GALVANIZED STEEL OR ALUMINUM.
2. 1 1/4" TO 2" O.D. ROUND OR OVAL PIPE.
3. WELDED, WITH SMOOTH SURFACE AND JOINTS.
4. POSTS SET IN MIN. 6" CONCRETE CLASS 3000.
5. SEE SEC. 3-3.06.

**RAILING MUST MEET ALL APPLICABLE BUILDING CODES.

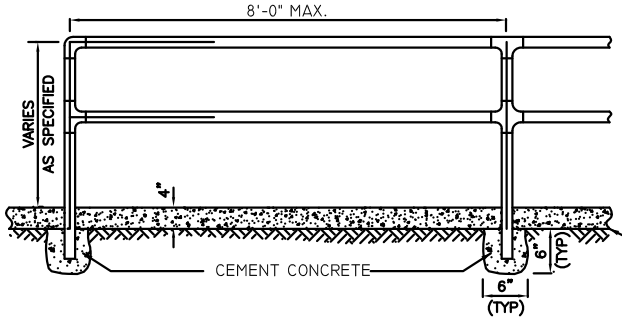

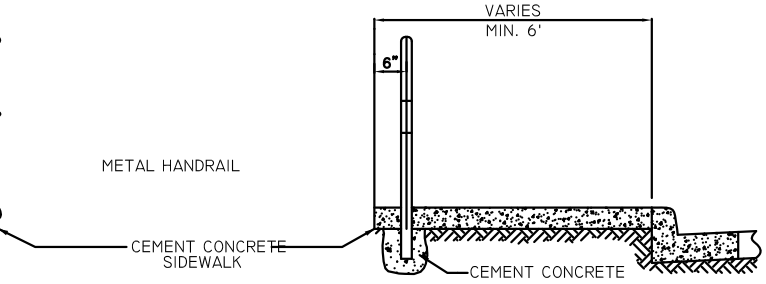

City of Duvall

CONCRETE STEPS & METAL HANDRAIL	REVISED 5/10/07
STANDARD PLAN	3-05-008

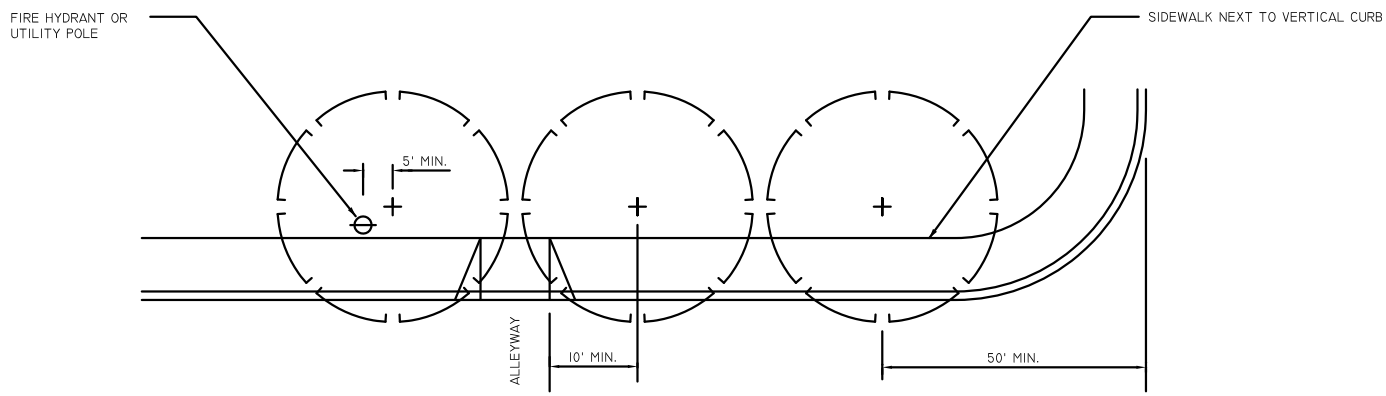

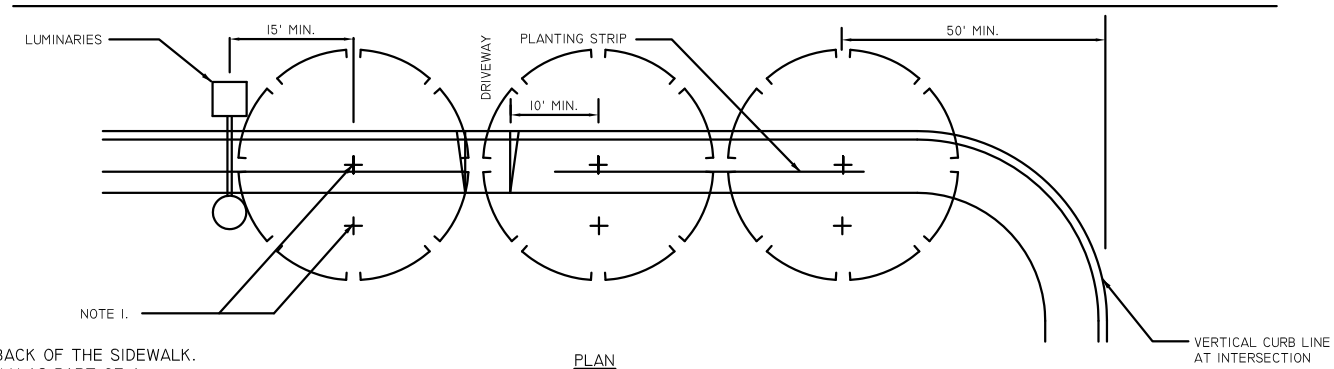

PLAN

NOTES:

1. TREES SHALL GENERALLY BE PLANTED BACK OF THE SIDEWALK. PLANTING STRIPS WILL BE APPROVED ONLY AS PART OF A LANDSCAPING PLAN IN WHICH PLANT MAINTENANCE, COMPATIBILITY WITH UTILITIES, AND TRAFFIC SAFETY ARE DULY CONSIDERED.
2. IF PLANTING STRIPS ARE APPROVED:
   A. MIN. DISTANCE FROM CENTER OF ANY TREE TO NEAREST EDGE OF VERTICAL CURB SHALL BE 2 FEET.
   B. TREES SHALL BE STAKED IN A MANNER NOT TO OBSTRUCT SIDEWALK TRAFFIC.
   C. IN CASE OF BLOCK-OUTS, MIN. CLEAR SIDEWALK WIDTH SHALL BE 5 FEET IN RESIDENTIAL OR 8 FEET IN BUSINESS DISTRICTS.
3. ON BUS ROUTES, PLANS SHALL BE COORDINATED WITH METRO SERVICE PLANNING. PHONE 684-1622.
4. SEE SEC. 3-5.03.
5. STANDARD ROOT DEFLECTORS (ROOT BARRIER) SHALL BE INSTALLED AROUND ALL TREE'S WITHIN THE PUBLIC RIGHT OF WAY. ROOT DEFLECTORS SHALL BE RIGID HIGH IMPACT POLYPROPYLENE TREATED WITH UV INHIBITORS, MINIMUM 18" IN HEIGHT, W/ 1/2" RAISED VERTICAL RIBS ON CENTER, OR APPROVED EQUAL.
6. INSTALL 4" PERF. PIPE, FILLED WITH DRAIN ROCK. PIPE SHALL STAND VERTICALLY AND GO DOWN TO A MINIMUM 2" BELOW ROOT BALL.
7. SPACE BETWEEN BACK OF CURB AND SIDEWALK SHALL BE 2x ROOT BALL WIDTH.

** PLACEMENT, SELECTION AND LOCATION OF STREET TREES IS GOVERNED BY THE DUVALL MUNICIPAL CODE, CHAPTER 14.

City of Duvall

STREET TREE STANDARDS	REVISED 5/10/07
STANDARD PLAN	3-05-009

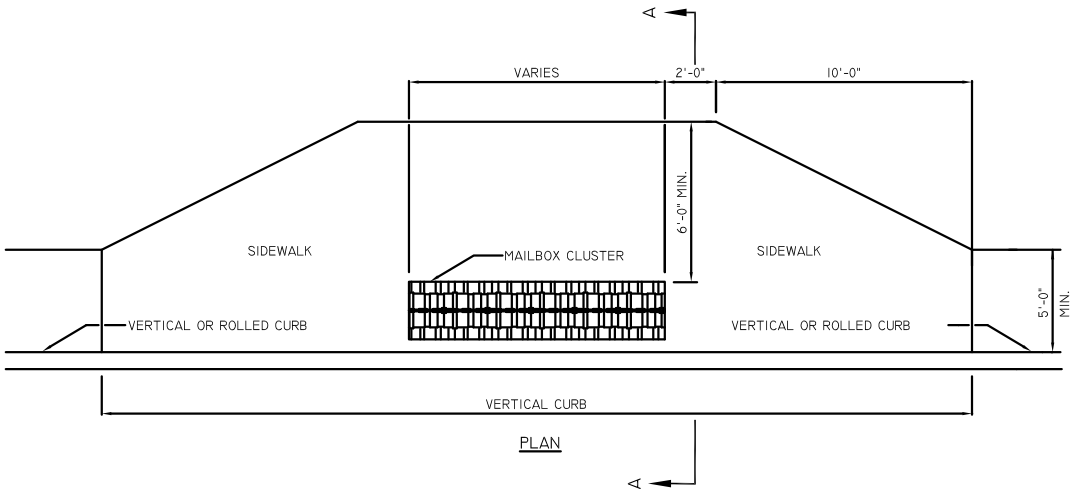

PLAN

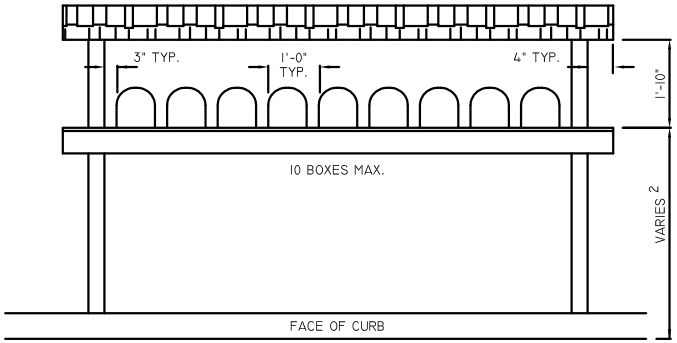

ELEVATION

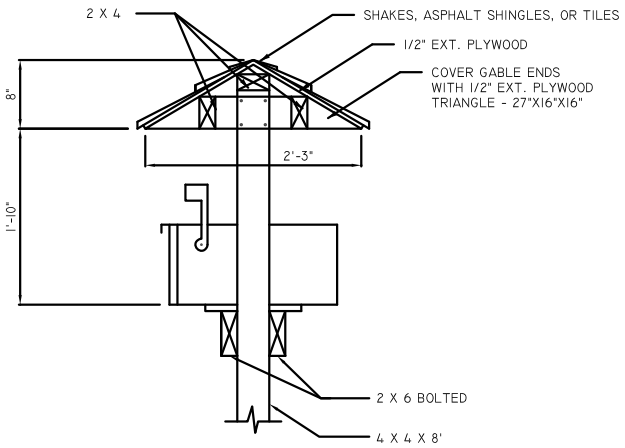

DETAIL

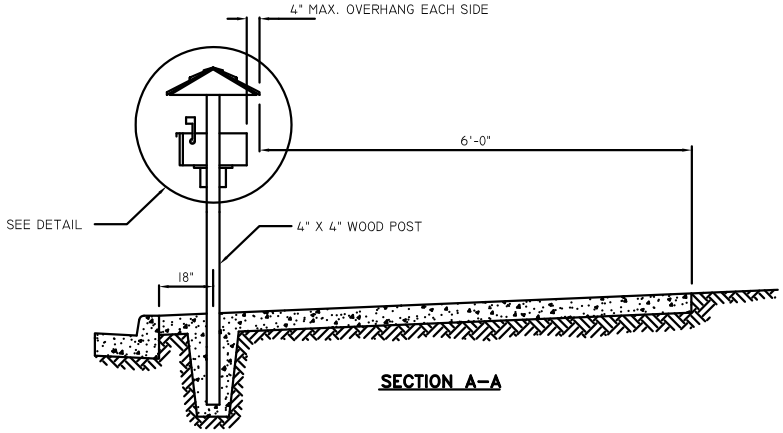

SECTION A–A

NOTES:

1. FOR THREE OR MORE MAILBOXES ON URBAN RESIDENTIAL ACCESS STREETS WHERE THE SPEED LIMIT IS 25 MPH.
2. MAILBOX HEIGHT VARIES ACCORDING TO THE TYPE OF DELIVERY VEHICLE. THESE HEIGHTS SHALL BE DETERMINED BY THE POSTMASTER DURING PLAN REVIEW.
3. MAILBOXES MUST BE POSTMASTER APPROVED WITH A UNIFORM BOX STYLE AND METHOD OF ADDRESS IDENTIFICATION.
4. LOCATION OF MAILBOXES SUBJECT TO APPROVAL OF THE REVIEWING AGENCY.
5. WOOD POSTS SHALL BE PRESSURE TREATED FIR OR HEMLOCK.
6. FOR MAILBOX CLUSTER LOCATION IN SHOULDER SECTION SEE DWG. NO. 3-5-011
7. SEE SEC. 3-5-04.
8. OPTIONAL NEWSPAPER BOX STRUCTURES ARE SUBJECT TO APPROVAL OF REVIEWING AGENCY.
9. SEE DETAIL 3-05-012, N.D.C.B.U TYPE REQUIRED PER DUVALL POSTMASTER.

City of Duvall

MAILBOX MOUNTING CURB TYPE LOCATION	REVISED 5/10/07
STANDARD PLAN	3-05-010

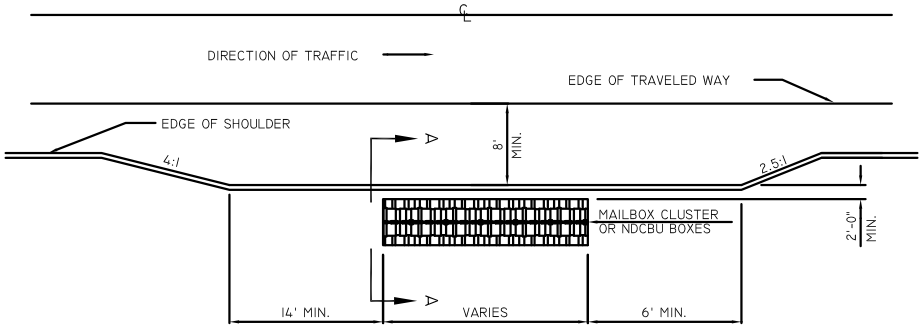

MAILBOX TURNOUT
FOR SHOULDER WIDTHS LESS THAN 8'-0" [3]

PLAN

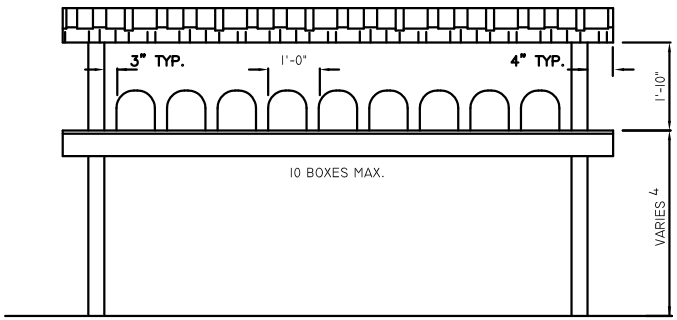

ELEVATION

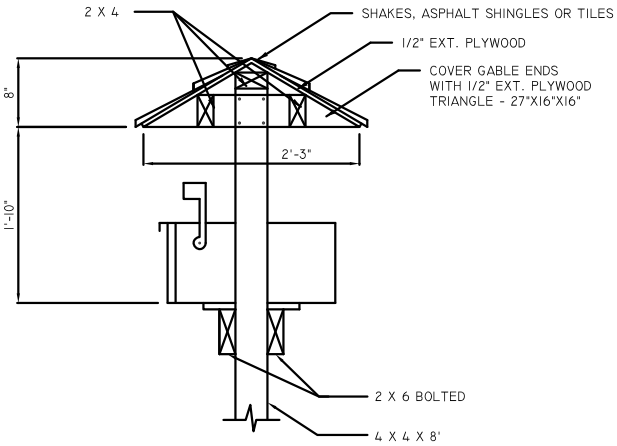

DETAIL

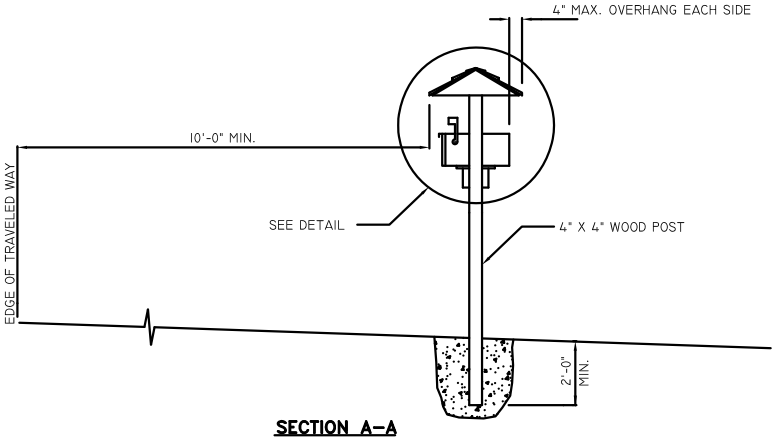

SECTION A–A

NOTES:

1. SEE SEC. 3-5.04.
2. MAILBOX INSTALLATIONS ON PROJECTS FUNDED BY FEDERAL GRANTS SHALL BE CONSTRUCTED IN ACCORDANCE WITH WSDOT/APWA STANDARD PLAN H-12.
3. REVIEWING AGENCY MAY APPROVE INSTALLATIONS OF MAILBOXES WITHOUT TURNOUT IF CONSTRUCTED IN CONFORMANCE WITH WSDOT/APWA STANDARD PLAN H-12.
4. MAILBOX HEIGHT VARIES ACCORDING TO THE TYPE OF DELIVERY VEHICLE. THESE HEIGHTS SHALL BE DETERMINED BY THE POSTMASTER DURING PLAN REVIEW.
5. SEE DETAIL 3-05-012, N.D.C.B.U. TYPE REQUIRED PER DUVALL POSTMASTER.

City of Duvall

MAILBOX MOUNTING SHOULDER TYPE LOCATION	REVISED 5/10/07
STANDARD PLAN	3-05-011

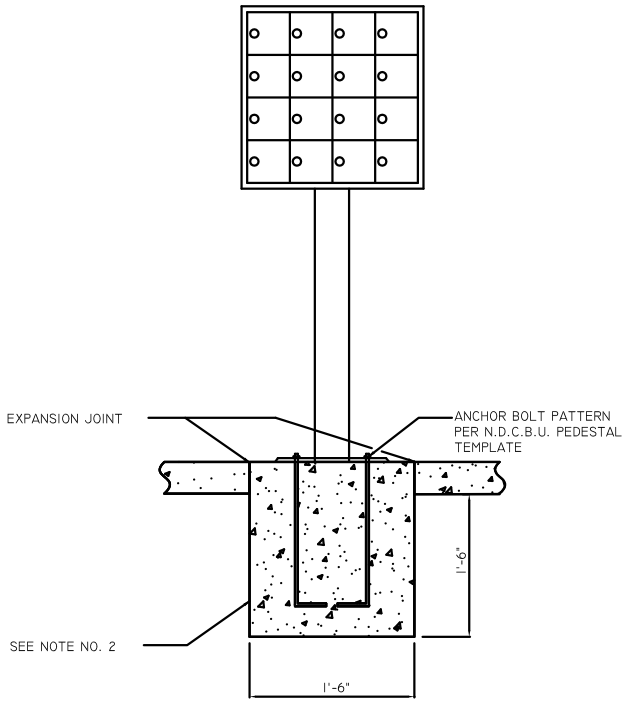

FRONT

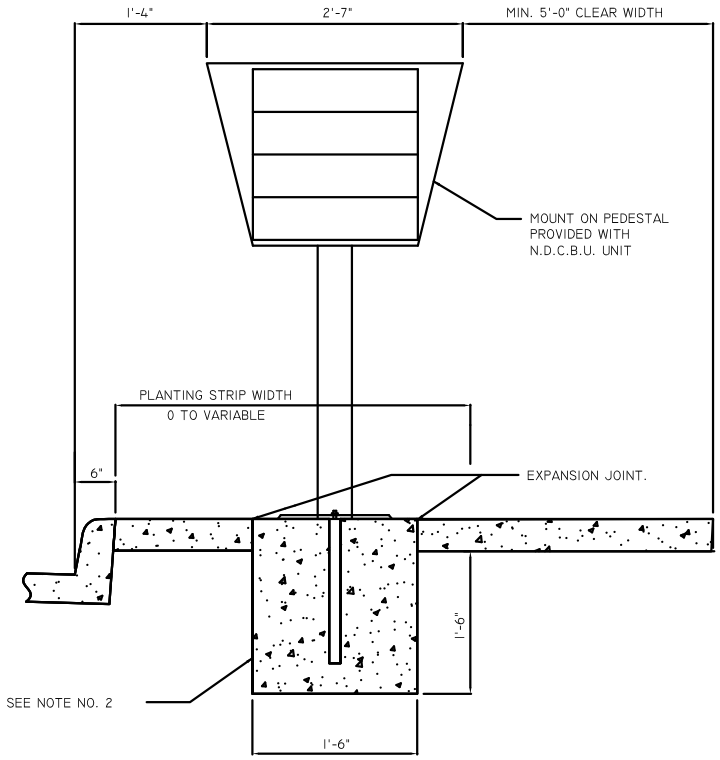

SIDE

NOTES:

1. SEE SEC. 3-5.04
2. INSTALLATION OF N.D.C.B.U. (INCLUDING CONSTRUCTION OF BASE) WILL BE DONE BY APPLICANT BASED ON A PLAN APPROVED BY THE US POSTAL SERVICE AND THE CITY OF DUVALL.
3. SEE SEC. 3-3.04 FOR JOINT REQUIREMENTS

City of Duvall

NEIGHBORHOOD DELIVERY & COLLECTION BOX UNIT INSTALLATION (N.D.C.B.U.)	REVISED 6/26/2012
STANDARD PLAN	3-05-012

FABRICATION SCHEDULE

REMOVABLE BOLLARD BASE | **BOLLARD ANCHOR** | **COMPLETED ASSEMBLY**

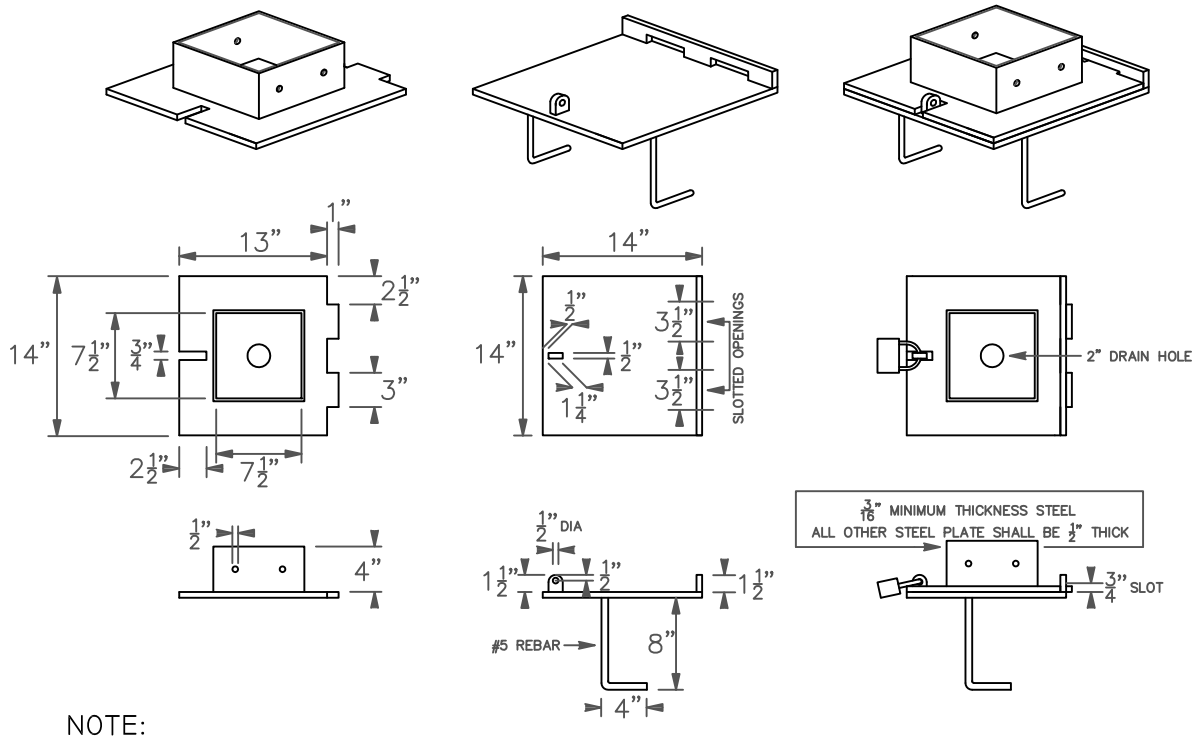

NOTE:

STEEL BOLLARD BASES SHALL BE HOT DIPPED GALVANIZED AFTER FABRICATION

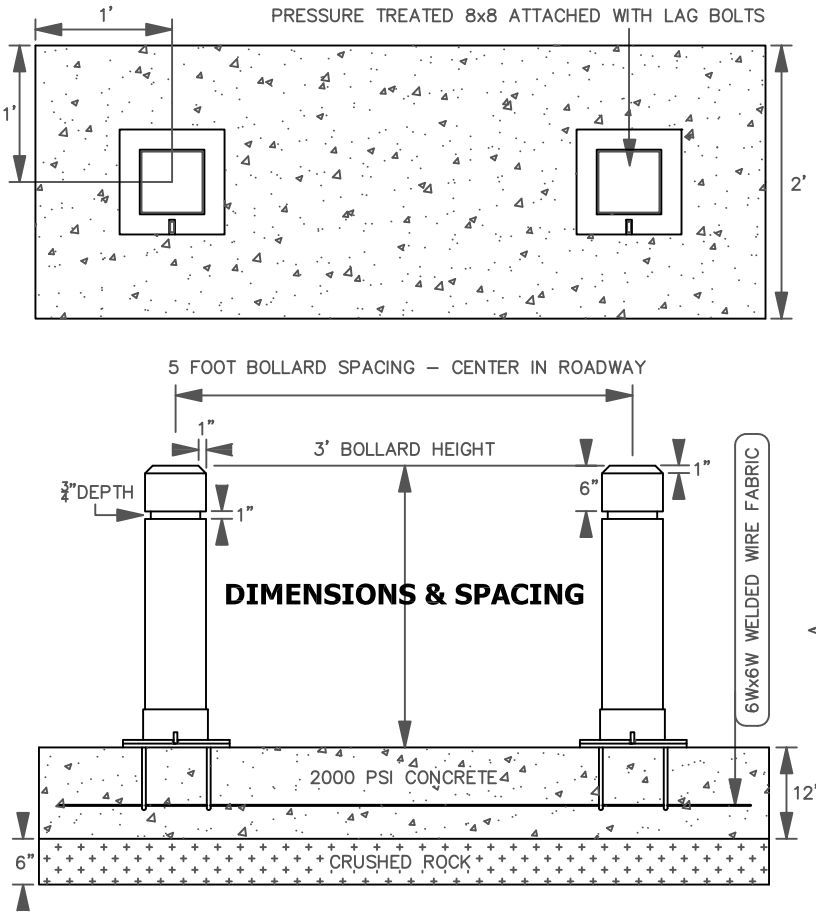

DIMENSIONS & SPACING

ISOMETRIC VIEW

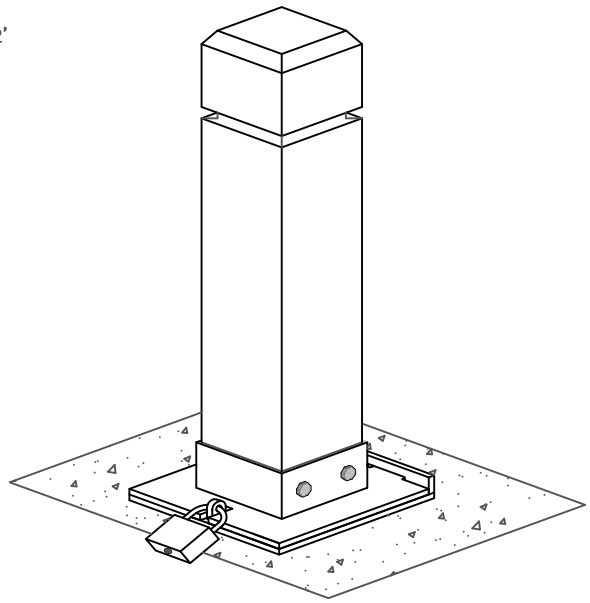

DUVALL DESIGN STANDARDS: 2007			City of Duvall	REMOVABLE BOLLARDS
REVISION	BY	DATE		
NEW FORMAT	DLC	03-25-11		DRAWING NUMBER 3-05-013

F:\Public Works\Development Guidelines\DDS Manual\2009 Update\Details\DWG\3-05-013 Removable Bollards DC.dwg]

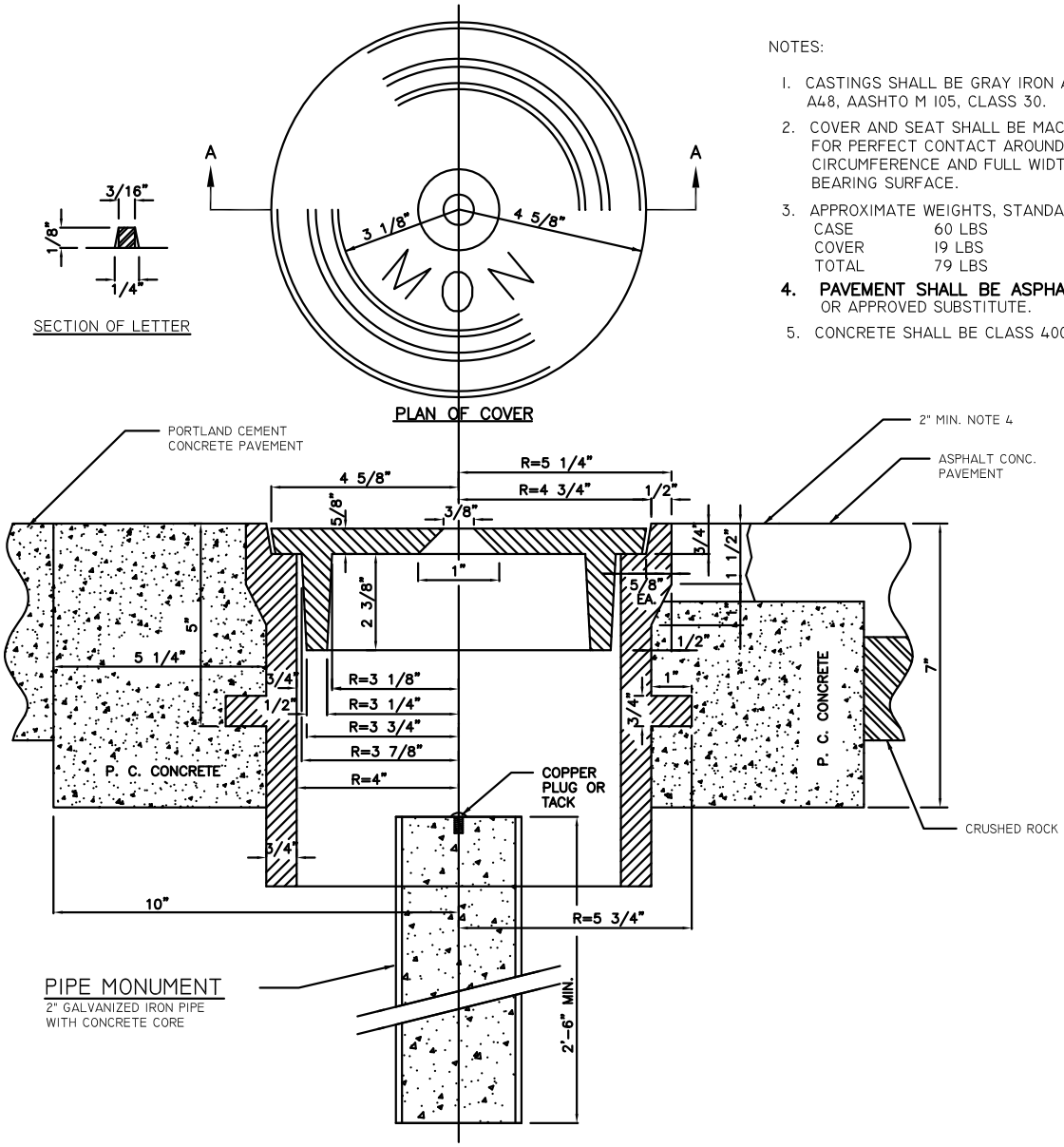

NOTES:

1. CASTINGS SHALL BE GRAY IRON ASTM A48, AASHTO M 105, CLASS 30.
2. COVER AND SEAT SHALL BE MACHINED FOR PERFECT CONTACT AROUND CIRCUMFERENCE AND FULL WIDTH OF BEARING SURFACE.
3. APPROXIMATE WEIGHTS, STANDARD.

CASE	60 LBS
COVER	19 LBS
TOTAL	79 LBS

4. **PAVEMENT SHALL BE ASPHALT CONCRETE** OR APPROVED SUBSTITUTE.
5. CONCRETE SHALL BE CLASS 4000.

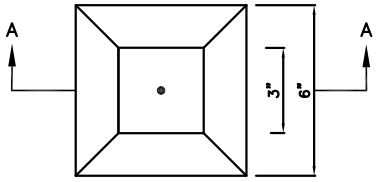

PLAN OF MONUMENT

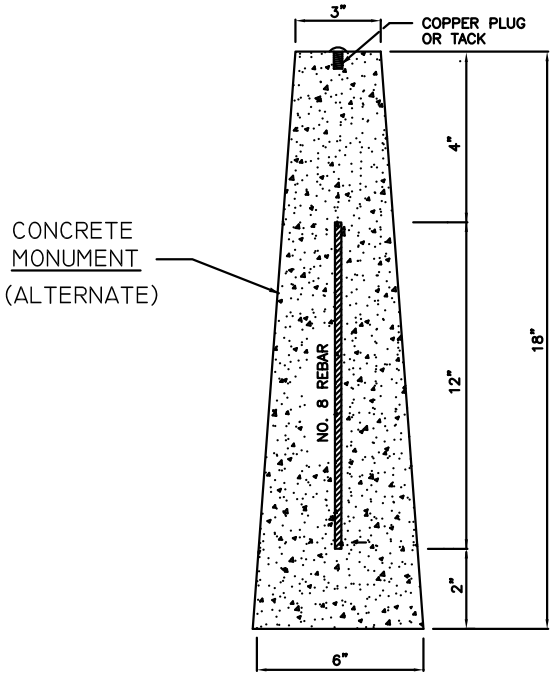

SECTION B-B

City of Duvall

ROADWAY SURVEY MONUMENT W/ CASE AND COVER	REVISED 5/10/07
STANDARD PLAN	3-05-014

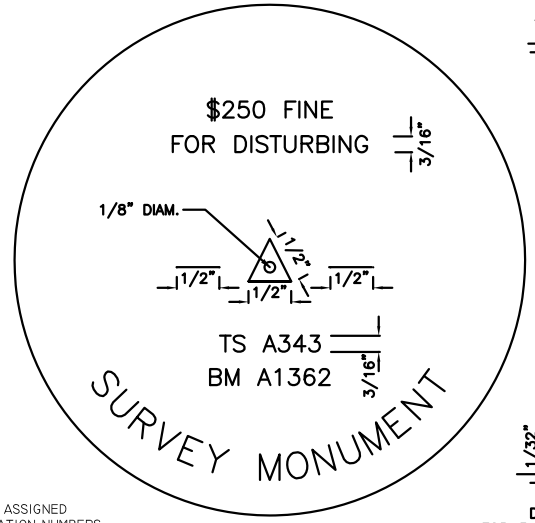

NOTE:
ONLY THE ASSIGNED IDENTIFICATION NUMBERS ARE TO APPEAR ON THE BRASS DISC.

PLAN

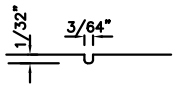

DETAIL OF GROOVE FOR 1/4" LETTERS

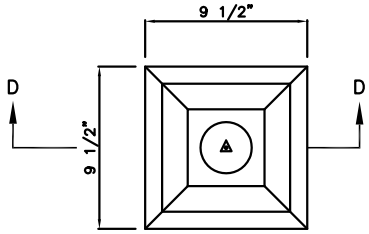

PLAN

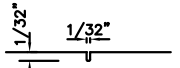

DETAIL OF GROOVE FOR 3/16" LETTERS AND LINES

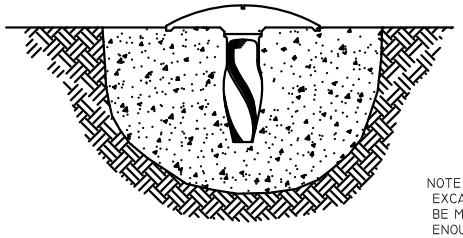

NOTE:
EXCAVATION TO BE MADE LARGE ENOUGH TO CLEAR MARKER 1 1/2" AT ALL POINTS.

LEDGE ROCK OR
CONCRETE INSTALLATION

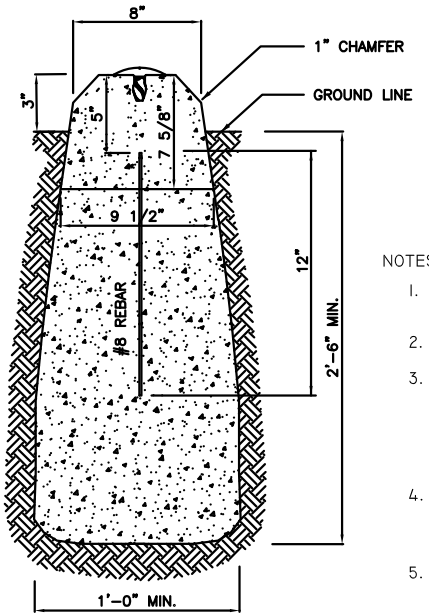

GENERAL INSTALLATION

SECTION D-D

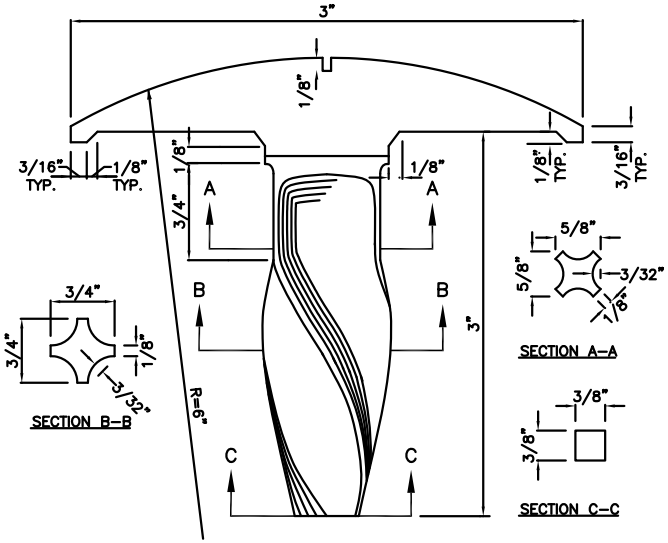

BRASS DISC

ELEVATION

NOTES;

1. THE BRASS DISC SHALL BE CAST OF YELLOW BRASS SAE 41.
2. CONCRETE SHALL BE CLASS 4000.
3. THE HOLE SHALL BE 2.5' MIN. IN DEPTH OR 0.5' BELOW THE DEEPEST RECORDED FROST LINE. ALL LOOSE MATERIAL SHALL BE REMOVED FROM THE BOTTOM OF THE HOLE SO THAT THE CONCRETE IS ON FIRM, UNDISTURBED EARTH.
4. THE TOP OF THE CONCRETE SHALL BE TROWLED SMOOTH AND THE BRASS DISC SET IN THE CENTER WITH ITS TOP EDGE FLUSH AND LEVEL.
5. COORDINATES OR ELEVATIONS SHALL NOT BE PLACED ON THE BRASS DISCS.

City of Duvall

OFF - ROADWAY SURVEY MONUMENT	REVISED 5/10/07
STANDARD PLAN	3-05-015

*COVERS SHALL HAVE THE WORD "SEWER" IN RAISED LETTERS WHEN USED IN CONNECTION WITH SANITARY SEWER INSTALLATION, OR "WATER" WHEN IN CONNECTION WITH WATER DISTRIBUTION INSTALLATION.

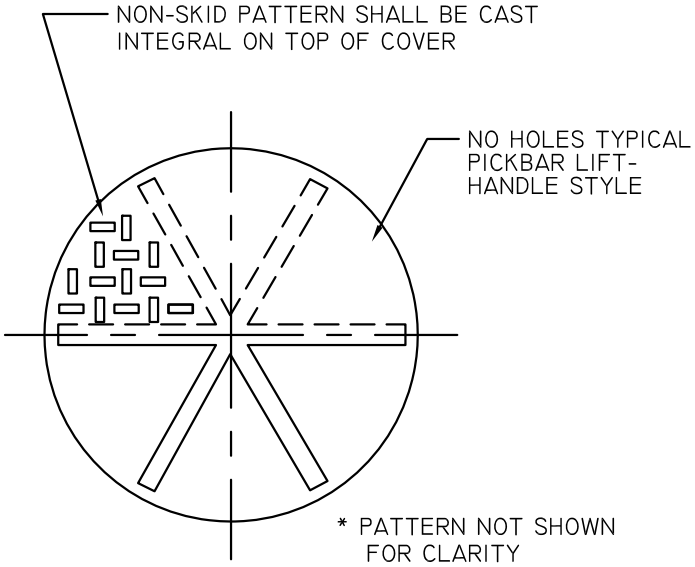

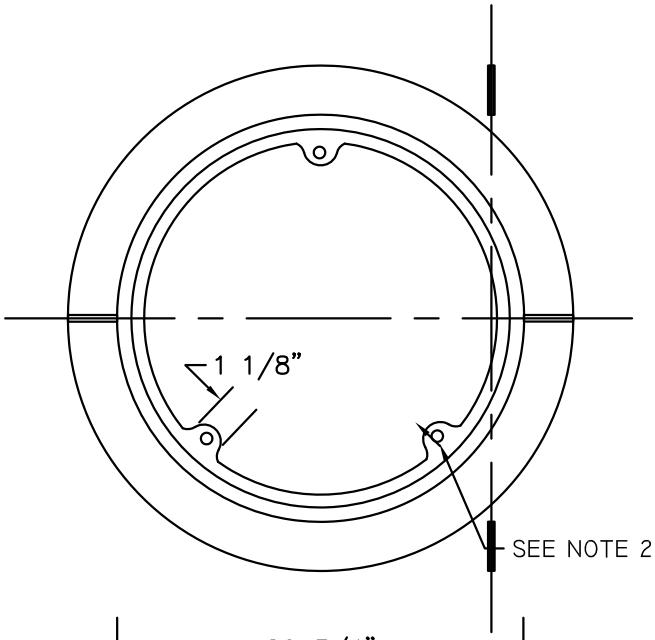

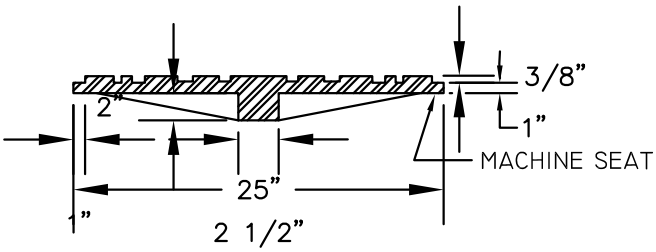

*DUCTILE IRON NON-LOCKING COVER MINIMUM WEIGHT 180 LBS.

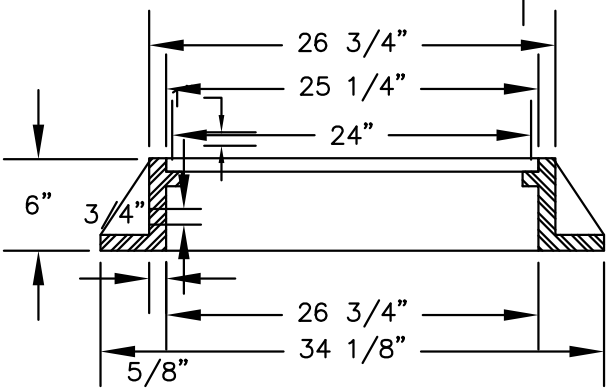

NOTES:

1. MATERIALS ARE DUCTILE IRON ASTM A-40 CLASS 35.
2. DRILL AND TAP THREE 5/8" HOLES THRU FRAME AT 120° AND 11 1/16" RADIUS.
3. EAST JORDAN IRON WORKS MANUFACTURING CO U6024R "WATER TIGHT" OR OTHERWISE APPROVED EQUAL.
4. WATERTIGHT MANHOLE FRAME AND COVERS ARE REQUIRED BASED ON LOCAL CONDITIONS.
5. ALL MANHOLES LOCATED OUTSIDE PAVEMENT AREAS SHALL BE PROVIDED WITH LOCKING MANHOLE FRAME AND COVER.
6. NO PICK HOLES
7. WITH HAND LIFT POCKETS

City of Duvall

DUCTILE IRON NON-LOCKING COVER	REVISED 5/10/07
STANDARD PLAN	5-01-001

City of Duvall

INTENTIONALLY LEFT VACANT

REVISED
5/10/07

STANDARD PLAN

5-01-002

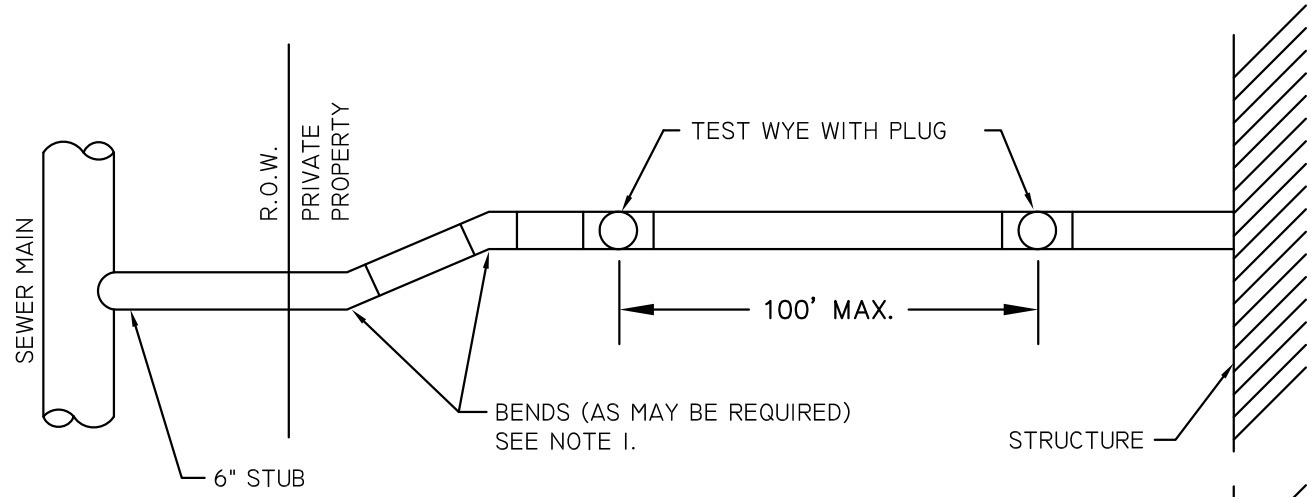

PLAN

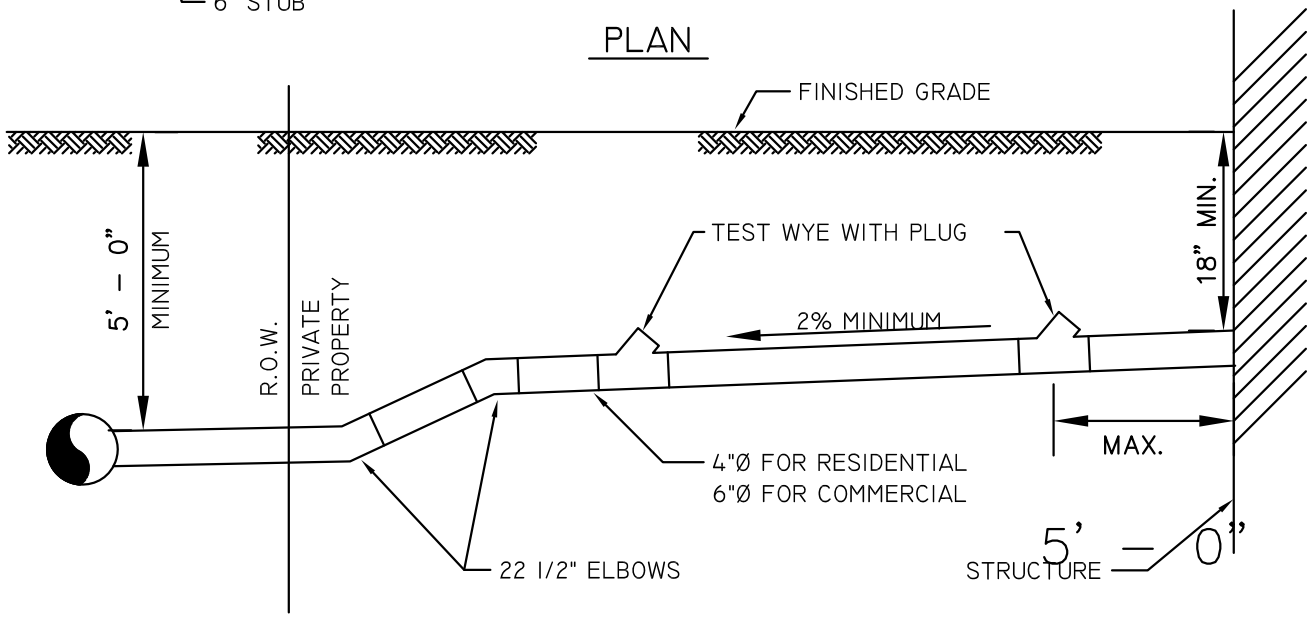

ELEVATION

NOTES:

1. ELBOWS SHALL NOT BE GREATER THAN 45°
2. CLEAN OUT IS REQUIRED FOR EACH PIPE LENGTH GREATER THAN 100' AND FOR EACH 90° ACCUMULATED ELBOW/100'.
3. RIGHT-OF-WAY RESTORATION SHALL MATCH OR EXCEED THE ORIGINAL CONDITION.
4. BACKFILL FOR PAVED AREA SHALL BE 5/8" MINUS CRUSHED SURFACING TOP COURSE, COMPACTED IN 12" LIFTS.
5. ALL PLUMBING OUTLETS SHALL BE CONNECTED TO THE SEWER. NO DOWNSPOUTS OR STORM DRAINAGE MAY BE CONNECTED TO THE SEWER SYSTEM.
6. 18" MINIMUM COVERAGE OF PIPE.
7. 6' MINIMUM COVERAGE AT PROPERTY LINE.
8. LAY PIPE IN STRAIGHT LINE BETWEEN BENDS. MAKE ALL CHANGES IN GRADE OR LINE WITH AN ELBOW OR WYE. 90° CHANGE WITH AN ELBOW AND WYE.
9. 6" SEWER PIPE MINIMUM SIZE IN RIGHT-OF-WAY, 2% MINIMUM GRADE, 45% MAXIMUM.
10. 4" SEWER PIPE MINIMUM SIZE ON PRIVATE RESIDENTIAL PROPERTY. 6" SEWER PIPE MIN. SIZE ON COMMERCIAL PROPERTIES. 2% MINIMUM GRADE, 45° MAXIMUM.
11. CONSTRUCTION IN RIGHT-OF-WAY SHALL BE PERFORMED BE A REGISTERED LICENSED CONTRACTOR.
12. ALL CONSTRUCTION REQUIRES A PERMIT AND PAYMENT OF FEES. COMPLETE LEGAL DESCRIPTION OF PROPERTY AND DIMENSIONS.
13. AS-BUILT DRAWING SHOWING LOCATION OF SIDE SEWER IN RELATION TO THE HOUSE IS REQUIRED AFTER INSTALLATION.

City of Duvall

TYPICAL SIDE SEWER	REVISED 5/10/07
STANDARD PLAN	5-01-003

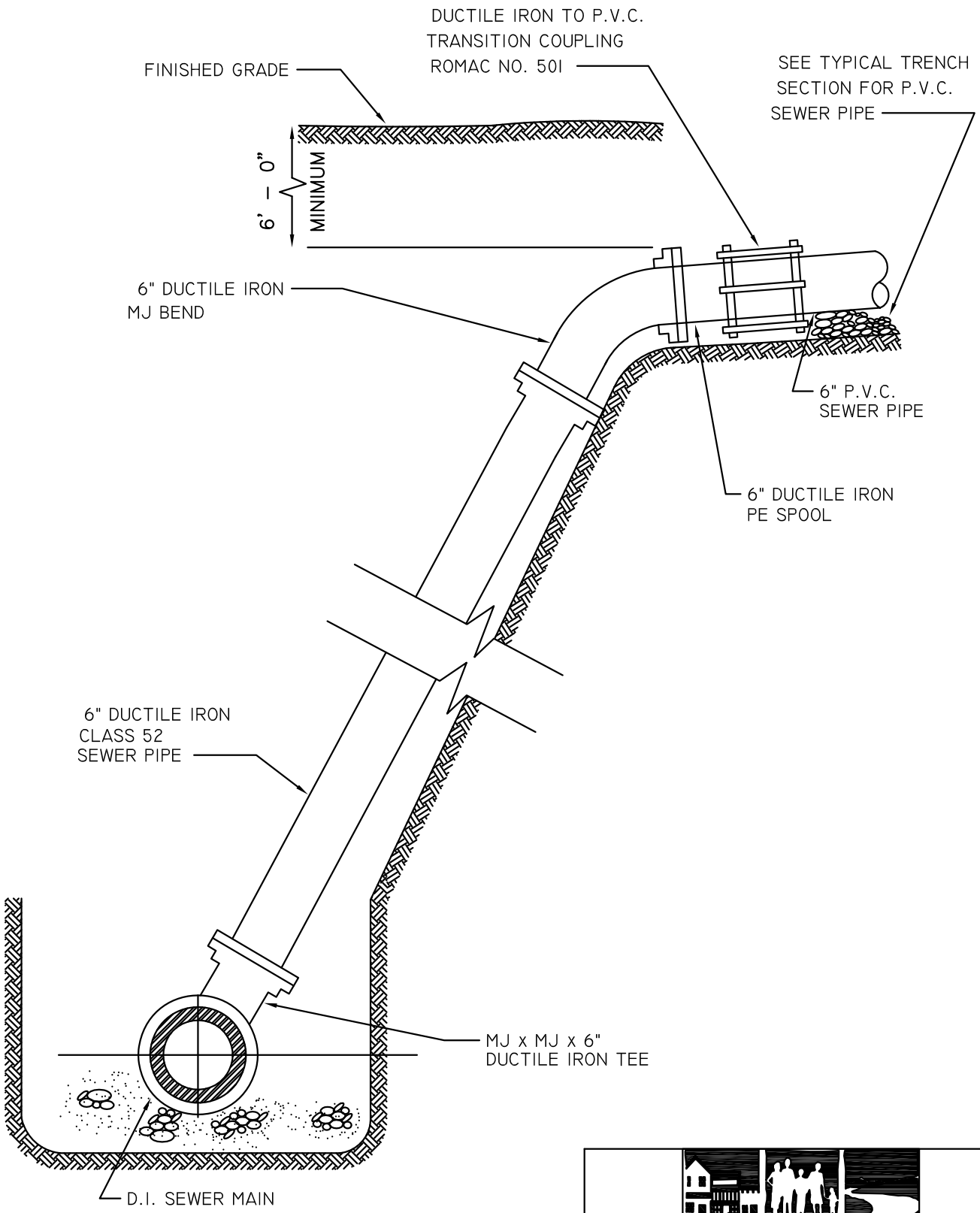

NOTE:
SEE TYPICAL TRENCH SECTION
FOR DUCTILE IRON SEWER PIPE

City of Duvall

TYPICAL TRENCH SECTION DUCTILE IRON SEWER PIPE	REVISED 5/10/07
STANDARD PLAN	5-01-004

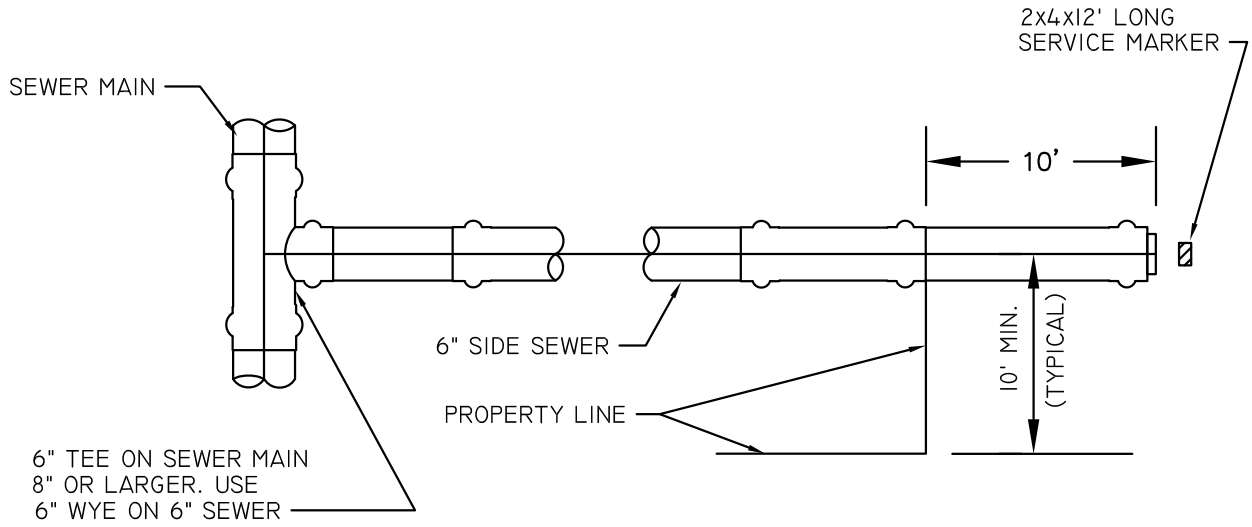

PLAN

NOTE:
PAINT PORTION OF SERVICE MARKER THAT IS ABOVE FINISHED GRADE WITH WHITE PAINT. STENCIL WITH BLACK LETTERS "S/S" USING 3" HIGH LETTERS. LOCATE SERVICE MARKER AT END OF EACH SERVICE. STENCIL TOTAL LENGTH OF 2x4.

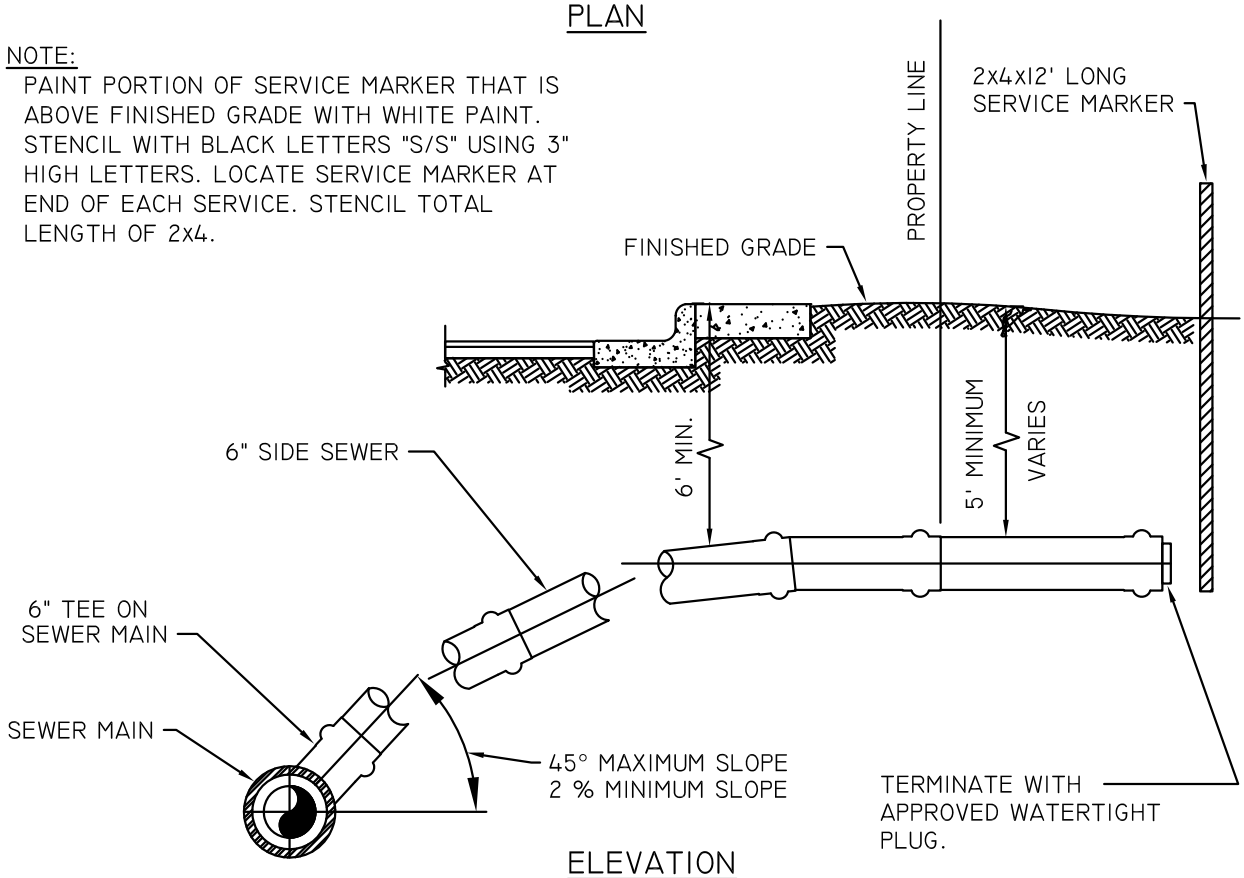

ELEVATION

NOTES:
1. MAXIMUM DEFLECTION NOT TO EXCEED PIPE MANUFACTERER RECOMMENDATIONS.
2. SIDE SEWER LATERAL SHALL BE THE SAME MATERIAL AS THE MAIN LINE SEWER AND BEDDED THE SAME.

City of Duvall

SIDE SEWER ELEVATION AND PLAN	REVISED 5/10/07
STANDARD PLAN	5-01-005

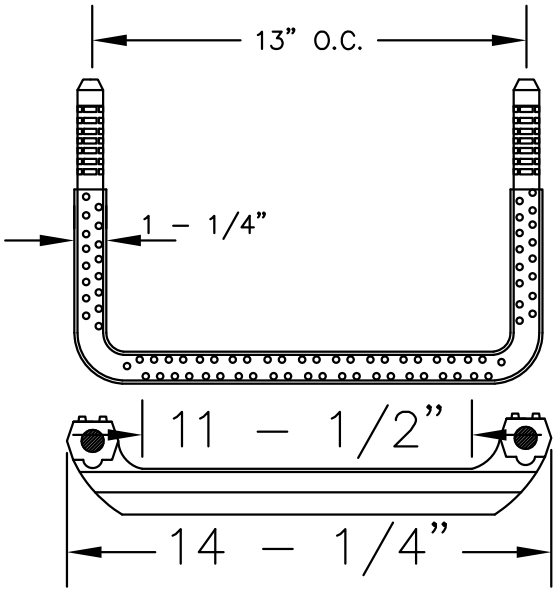

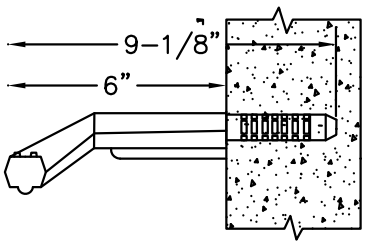

POLYPROPYLENE STEP, LANE
NO. P-13938 OR EQUAL

POLYPROPYLENE

MANHOLE STEPS

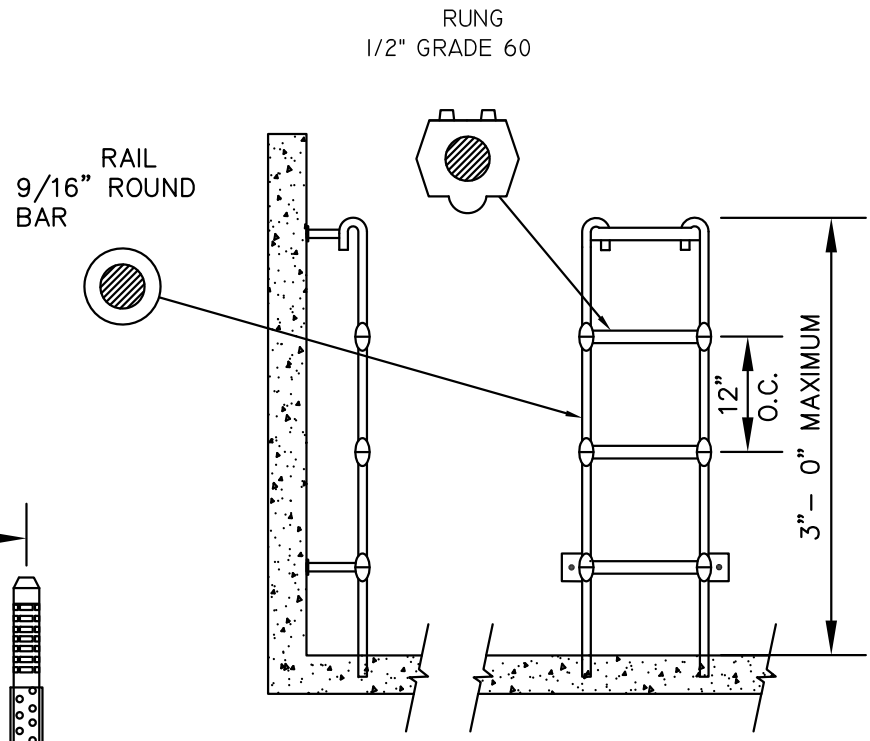

LADDER SHALL CONFORM TO
POLYPROPYLENE ASTM D-1401
1/2" GRADE 60 REINFORCING
BAR A-615 9/16" COLD DRAWN
BAR C-1018.

POLYPROPYLENE LADDER

City of Duvall

LADDER DETAIL	REVISED 5/10/07
STANDARD PLAN PS	5-01-006

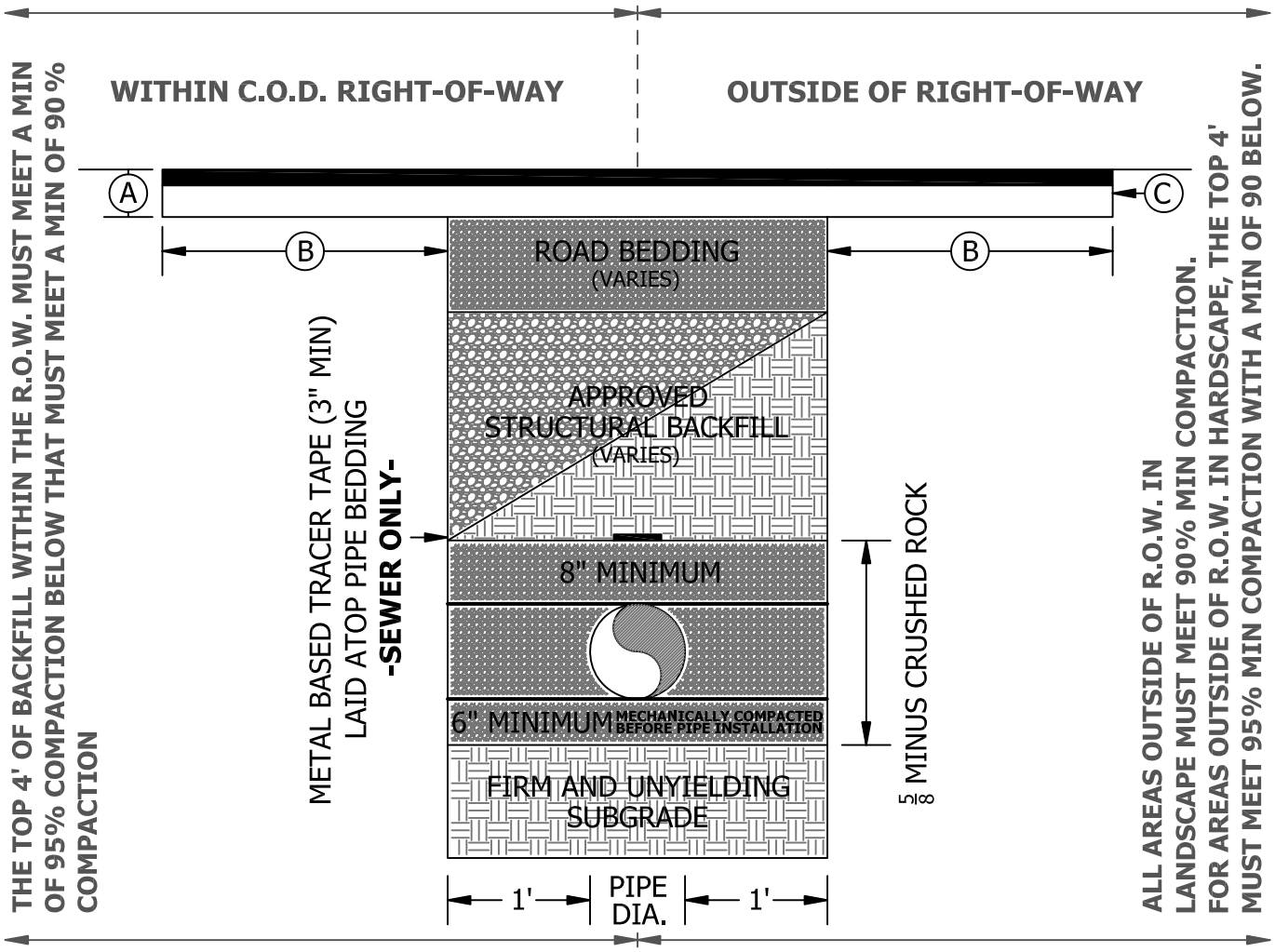

(A) PERMANENT ASPHALT TRENCH PATCH TO BE THE THICKNESS OF THE EXISTING ASPHALT + 1" OR A TOTAL OF 3", WHICHEVER IS GREATER UNLESS OTHERWISE APPROVED BY THE INSPECTOR.

(B) 3' TYPICAL "T-CUT". "T-CUT" MUST BE SQUARE IN SHAPE AND CONTAIN ONLY 90˚ ANGLES UNLESS OTHERWISE APPROVED. "T-CUTTING" MAY BE DONE BEFORE OR AFTER EXCAVATION. HOWEVER, IF THE SAWCUT ASPHALT EDGES BECOME BROKEN DURING CONSTRUCTION ANOTHER CUT WILL BE REQUIRED PRIOR TO PAVING.

(C) CUT EDGES OF ASPHALT SHALL BE CLEAN, STRAIGHT AND SQUARE BEFORE PAVING. ASPHALT EMULSION TACK SHALL BE APPLIED TO THE CLEAN CUT EDGES JUST PRIOR TO PAVING. LIQUID RUBBERIZED TAR SHALL BE APPLIED AND BROOMED TO ALL SEAMS AFTER PAVING ACTIVITIES. SAND SHALL BE APPLIED TO THE LIQUID TAR AFTER BROOMING. SPECIFICATIONS ON THE ASPHALT EMULSION AND LIQUID TAR CAN BE FOUND IN THE CURRENT WSDOT MANUAL.

DUVALL DESIGN STANDARDS: 2007

REVISION	BY	DATE
COMPLETE UPDATE	DLC	01-25-10

City of Duvall

PIPE BEDDING, TRENCH SECTION & ASPHALT PATCHING

DRAWING NUMBER 5-01-007

F:\Public Works\Development Guidelines\DDS Manual\2009 Update\Details\DWG\5-01-007 Trench Profile.dwg

City of Duvall

INTENTIONALLY LEFT VACANT

REVISED
5/10/07

STANDARD PLANS

5-01-008

City of Duvall

INTENTIONALLY LEFT VACANT

REVISED
5/10/07

STANDARD PLANS

5-01-009

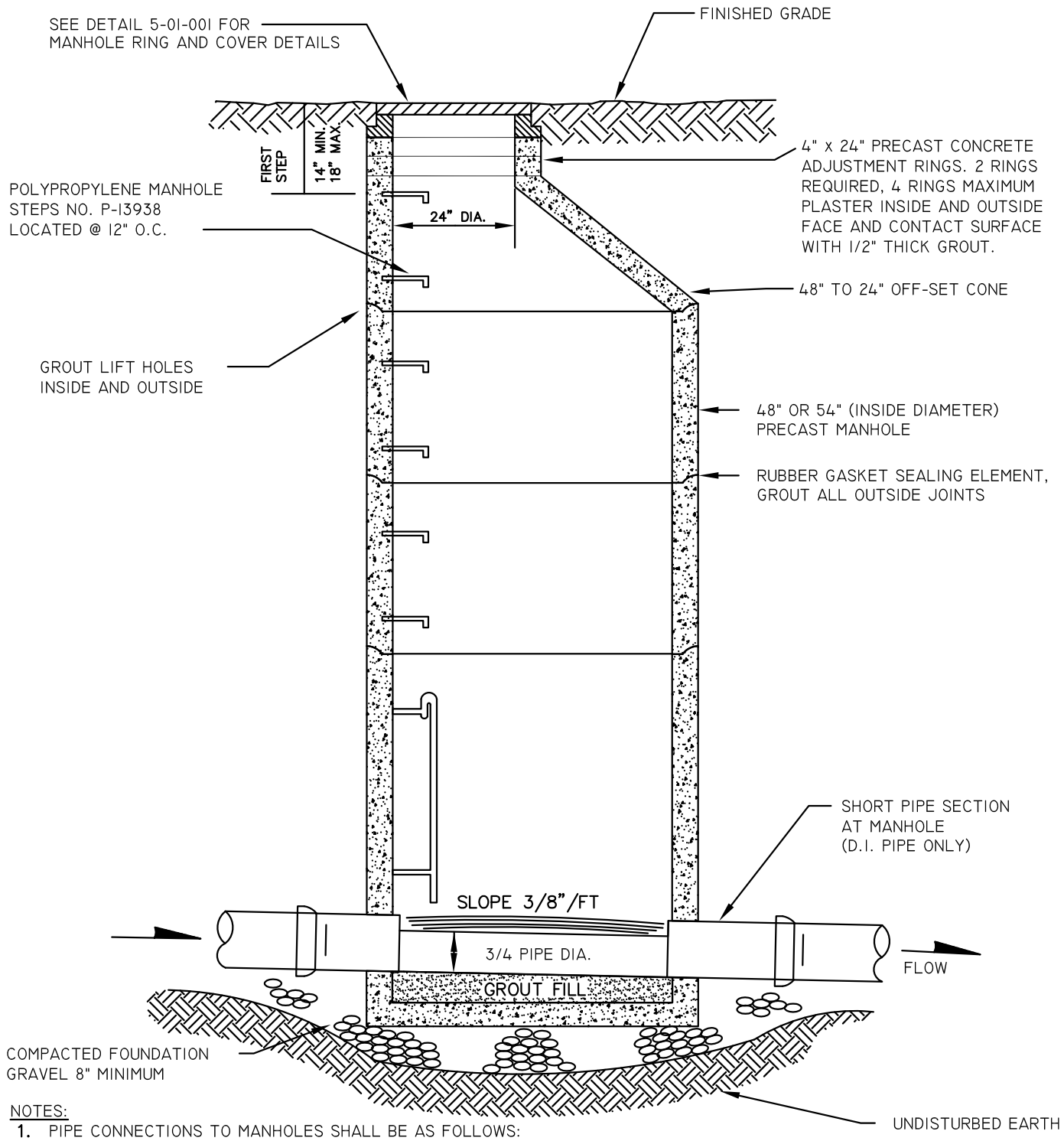

NOTES:

1. PIPE CONNECTIONS TO MANHOLES SHALL BE AS FOLLOWS: PVC PIPE" CAST OR GROUT A MANHOLE COUPLING INTO WALL. D.I. PIPE: BELL AND SPIGOT JOINT OR FLEXIBLE COUPLING EITHER SHALL BE 12" MAXIMUM DISTANCE FROM MANHOLE WALL. PVC AND D.I. PIPE, OPTIONAL: CORE THE MANHOLE AND CONNECT SEWER PIPE WITH A WATER TIGHT FLEXIBLE RUBBER BOOT IN MANHOLE WALL, KOR-N-SEAL BOOT OR EQUAL.
2. DROP OF GRADE THRU MANHOLE SHALL BE 0.10', UNLESS OTHERWISE APPLICABLE.
3. LARGER MANHOLES WILL BE REQUIRED AT THE DISCRETION OF THE CITY ENGINEER BASED ON PIPE SIZE, NUMBER AND ORIENTATION OF PIPE(S).

City of Duvall

TYPE I MANHOLE DETAIL THRU FLOW	REVISED 5/10/07
STANDARD PLAN	5-01-010

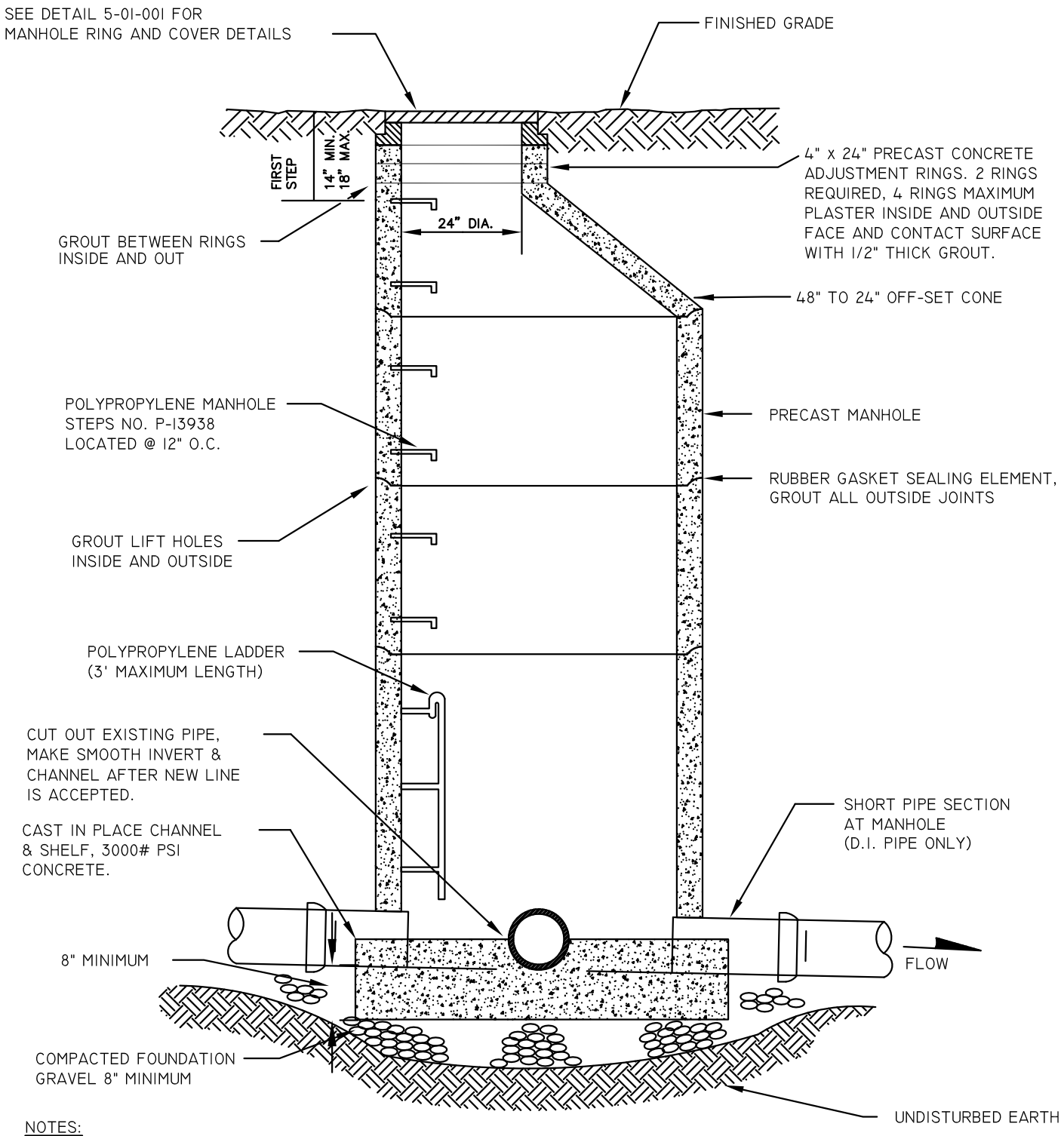

NOTES:

1. PIPE CONNECTIONS TO MANHOLES SHALL BE AS FOLLOWS: PVC PIPE" CAST OR GROUT A MANHOLE COUPLING INTO WALL. D.I. PIPE: BELL AND SPIGOT JOINT OR FLEXIBLE COUPLING EITHER SHALL BE 12" MAXIMUM DISTANCE FROM MANHOLE WALL. PVC AND D.I. PIPE, OPTIONAL: CORE THE MANHOLE AND CONNECT SEWER PIPE WITH A WATER TIGHT FLEXIBLE RUBBER BOOT IN MANHOLE WALL, KOR-N-SEAL BOOT OR EQUAL.
2. DROP OF GRADE THRU MANHOLE SHALL BE 0.10', UNLESS OTHERWISE APPLICABLE.

City of Duvall

TYPE I MANHOLE DETAILS CHANNEL AND SHELF	REVISED 5/10/07
STANDARD PLAN	5-01-011

City of Duvall

INTENTIONALLY LEFT VACANT

REVISED
5/10/07

STANDARD PLANS

5-01-012

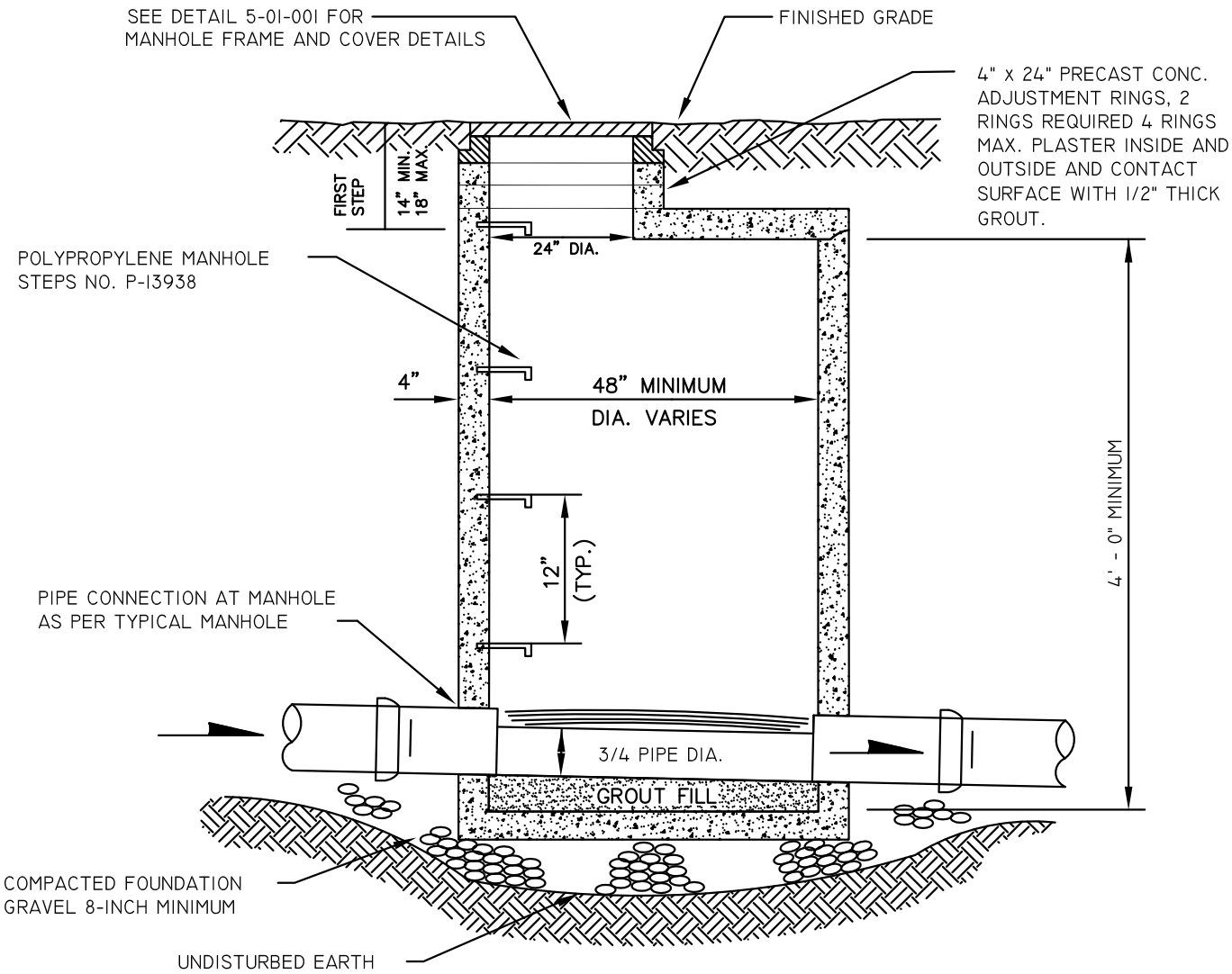

NOTES:

1. PIPE CONNECTIONS TO MANHOLES SHALL BE AS FOLLOWS: PVC PIPE: CAST OR GROUT A MANHOLE COUPLING INTO WALL. D.I. PIPE: BELL AND SPIGOT JOINT OR FLEXIBLE COUPLING EITHER SHALL BE 12" MAXIMUM DISTANCE FROM MANHOLE WALL. PVC AND D.I. PIPE, OPTIONAL: CORE THE MANHOLE AND CONNECT SEWER PIPE WITH A WATER TIGHT FLEXIBLE RUBBER BOOT IN MANHOLE WALL, KOR-N-SEAL BOOT OR EQUAL.

2. DROP OF GRADE THRU MANHOLE SHALL BE 0.10', UNLESS OTHERWISE APPLICABLE.

City of Duvall

TYPE 3 MANHOLE DETAIL	REVISED 5/10/07S:
STANDARD PLAN	5-01-013

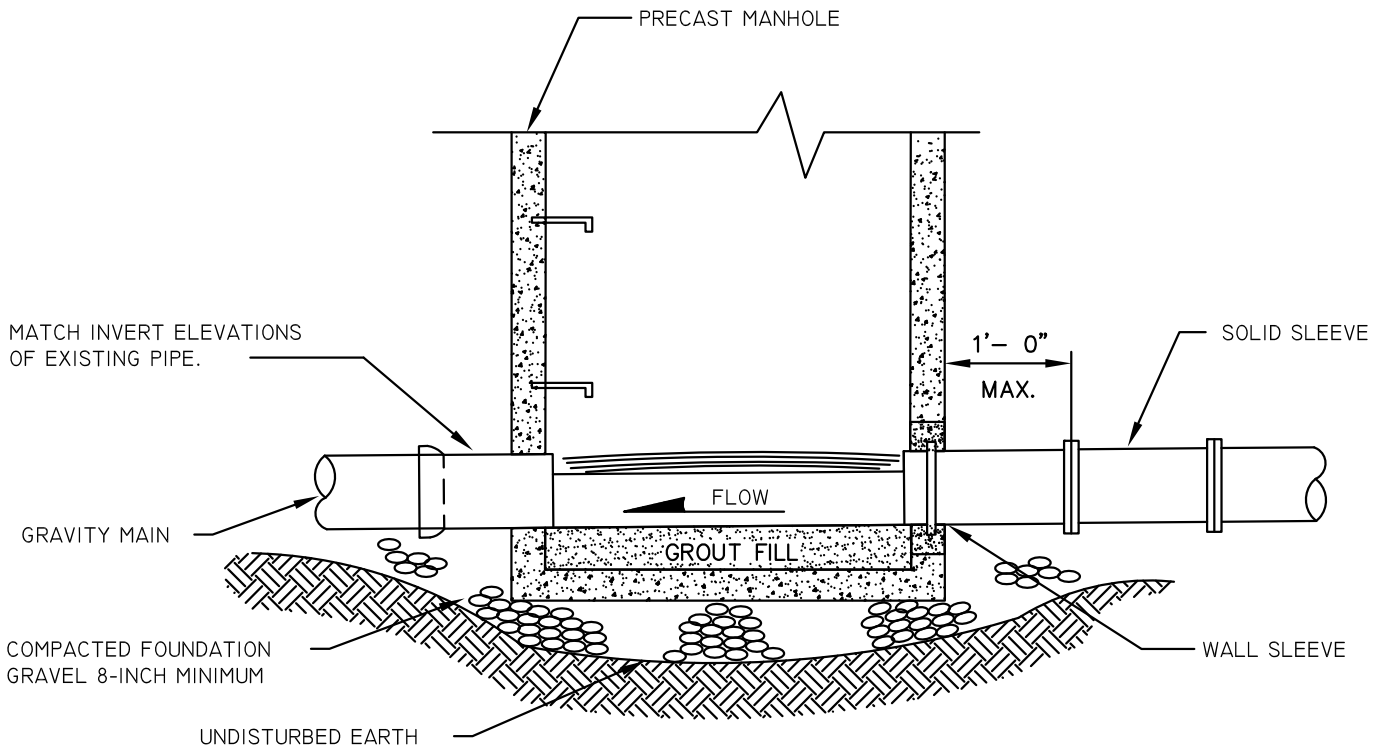

NOTES:

1. PIPE CONNECTIONS TO MANHOLES SHALL BE AS FOLLOWS: PVC PIPE: CAST OR GROUT A MANHOLE COUPLING INTO WALL. D.I. PIPE: BELL AND SPIGOT JOINT OR FLEXIBLE COUPLING EITHER SHALL BE 12" MAXIMUM DISTANCE FROM MANHOLE WALL. PVC AND D.I. PIPE, OPTIONAL: CORE THE MANHOLE AND CONNECT SEWER PIPE WITH A WATER TIGHT FLEXIBLE RUBBER BOOT IN MANHOLE WALL, KOR-N-SEAL BOOT OR EQUAL.

2. DROP OF GRADE THRU MANHOLE SHALL BE 0.10', UNLESS OTHERWISE APPLICABLE.

City of Duvall

MANHOLE DETAIL GRAVITY MAIN FLOW	REVISED 5/10/07
STANDARD PLAN	5-01-014

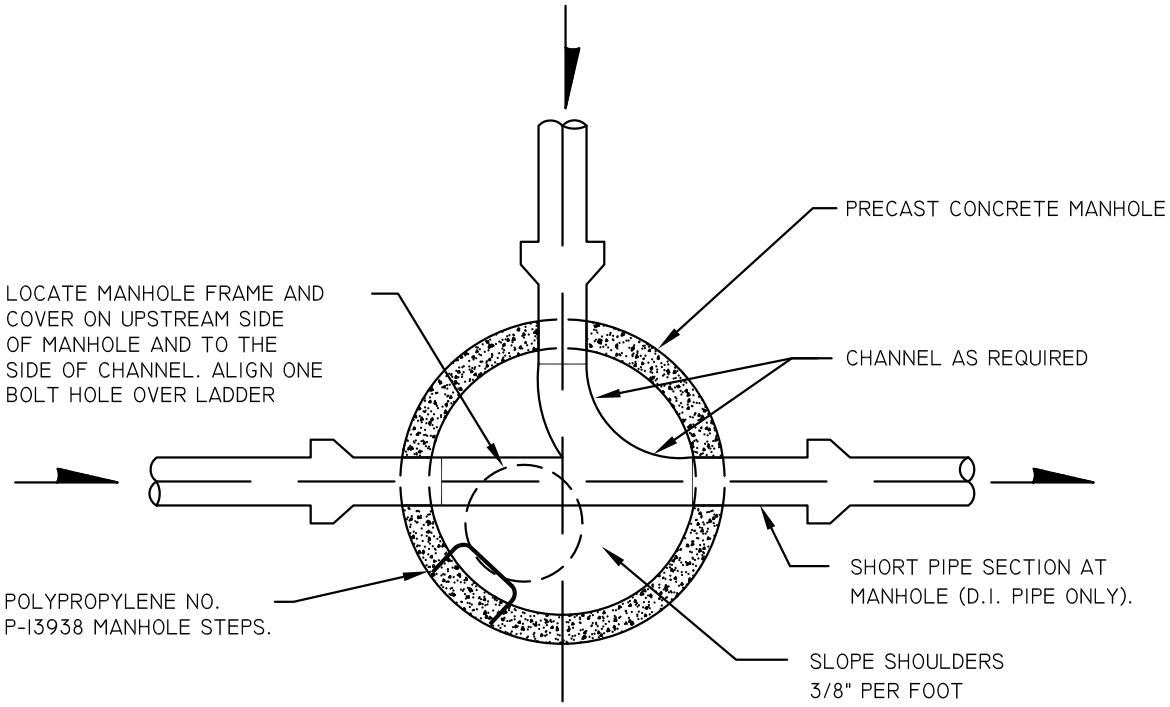

NOTES:

1. PIPE CONNECTIONS TO MANHOLES SHALL BE AS FOLLOWS: PVC PIPE: CAST OR GROUT A MANHOLE COUPLING INTO WALL. D.I. PIPE: BELL AND SPIGOT JOINT OR FLEXIBLE COUPLING EITHER SHALL BE 12" MAXIMUM DISTANCE FROM MANHOLE WALL. PVC AND D.I. PIPE, OPTIONAL: CORE THE MANHOLE AND CONNECT SEWER PIPE WITH A WATER TIGHT FLEXIBLE RUBBER BOOT IN MANHOLE WALL, KOR-N-SEAL BOOT OR EQUAL.

City of Duvall

MANHOLE PLAN	REVISED 5/10/07
STANDARD PLAN	5-01-015

NOTE:

PAINT PORTION OF SERVICE MARKER THAT IS ABOVE FINISHED GRADE WITH WHITE PAINT. STENCIL WITH BLACK LETTERS "S/S" USING 3" HIGH LETTERS. LOCATE SERVICE MARKER AT END OF EACH SERVICE. STENCIL TOTAL LENGTH OF 2x4.

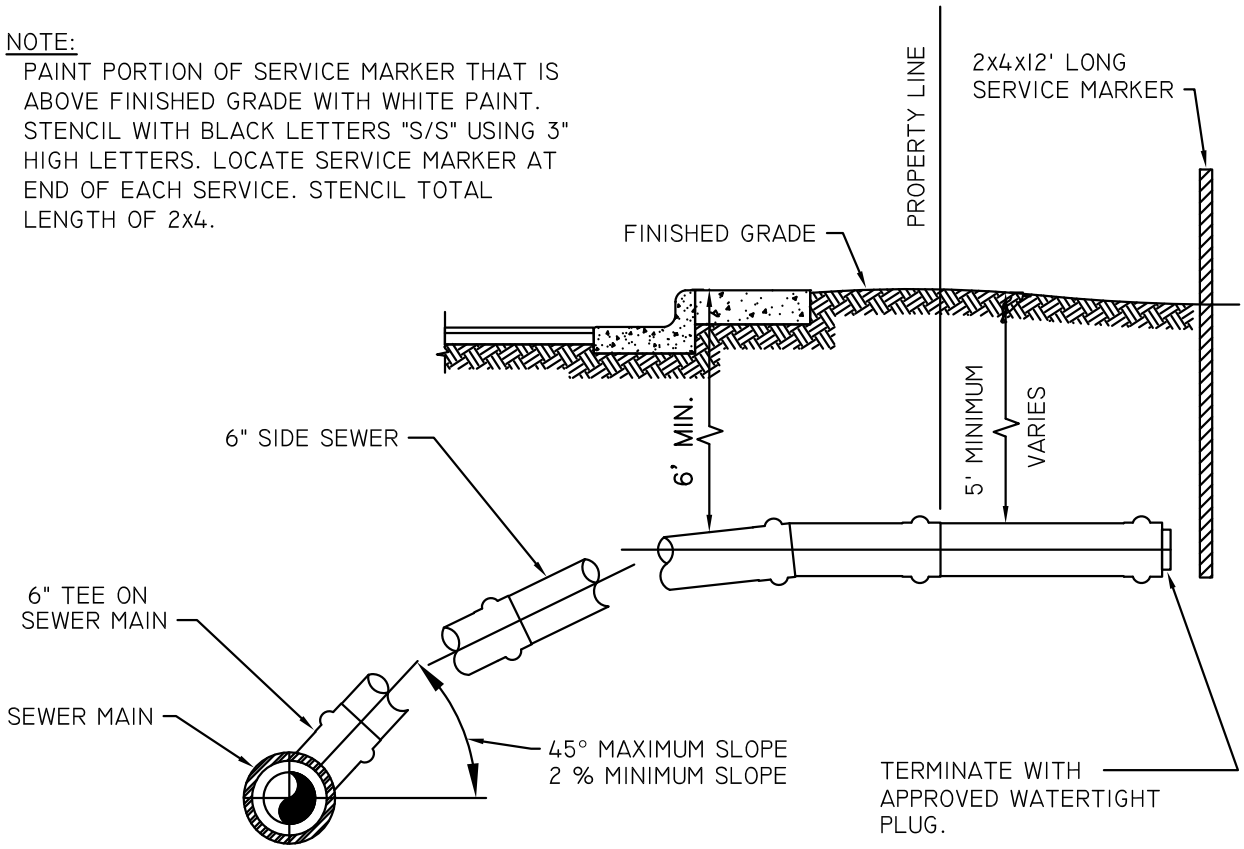

NOTE:

SEE "TYPICAL SIDE SEWER DETAIL" FOR CONSTRUCTION WITHIN NEW DEVELOPMENTS.

City of Duvall

SIDE SEWER SERVICE MARKER	REVISED 5/10/07
STANDARD PLAN	5-01-016

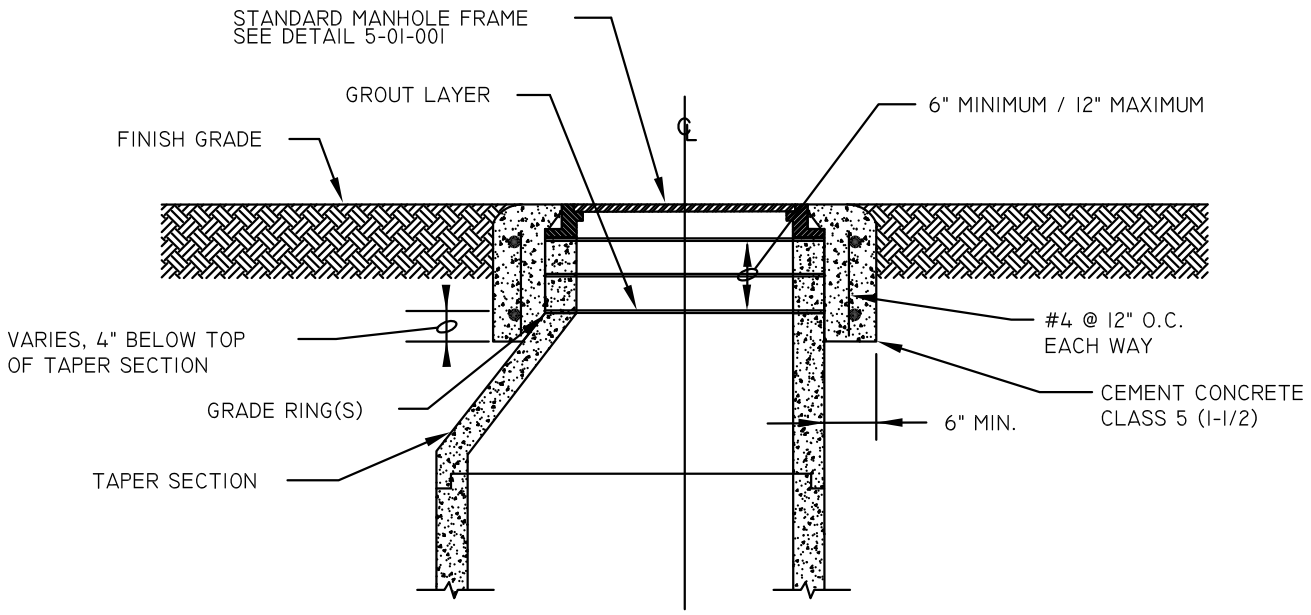

SECTION

NOTE:

CONSTRUCT CONCENTRIC CONCRETE COLLARS AROUND ALL MANHOLE FRAMES LOCATED OUTSIDE OF PAVEMENT AREAS

MANHOLE FRAME COLLAR

City of Duvall

MANHOLE FRAME COLLAR	REVISED 5/10/07
STANDARD PLAN	5-01-017

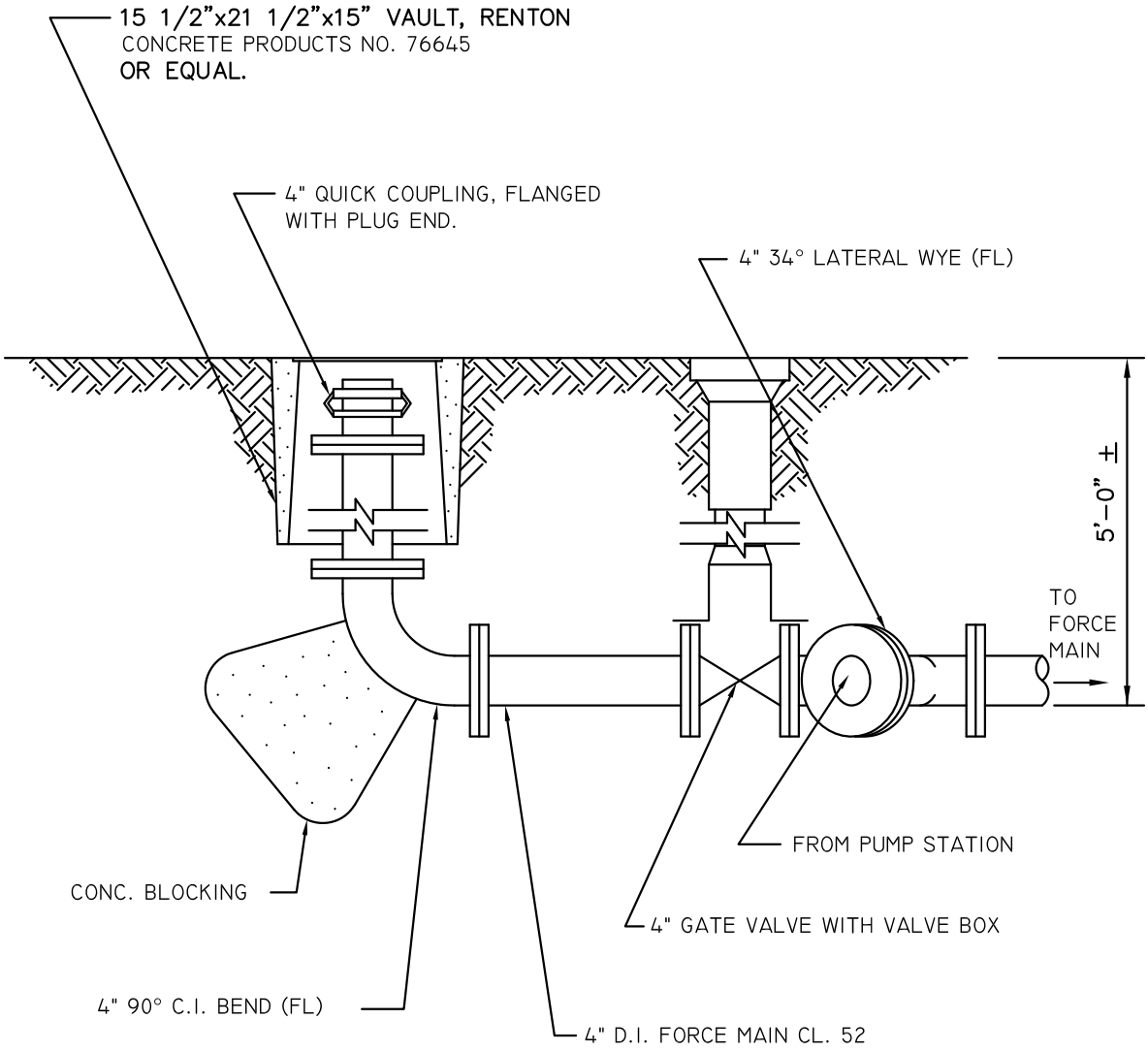

EMERGENCY BYPASS CONNECTION

N.T.S.

City of Duvall

EMERGENCY BYPASS CONNECTION (PUMP STATION)	REVISED 5/10/07
STANDARD PLAN	5-120-001

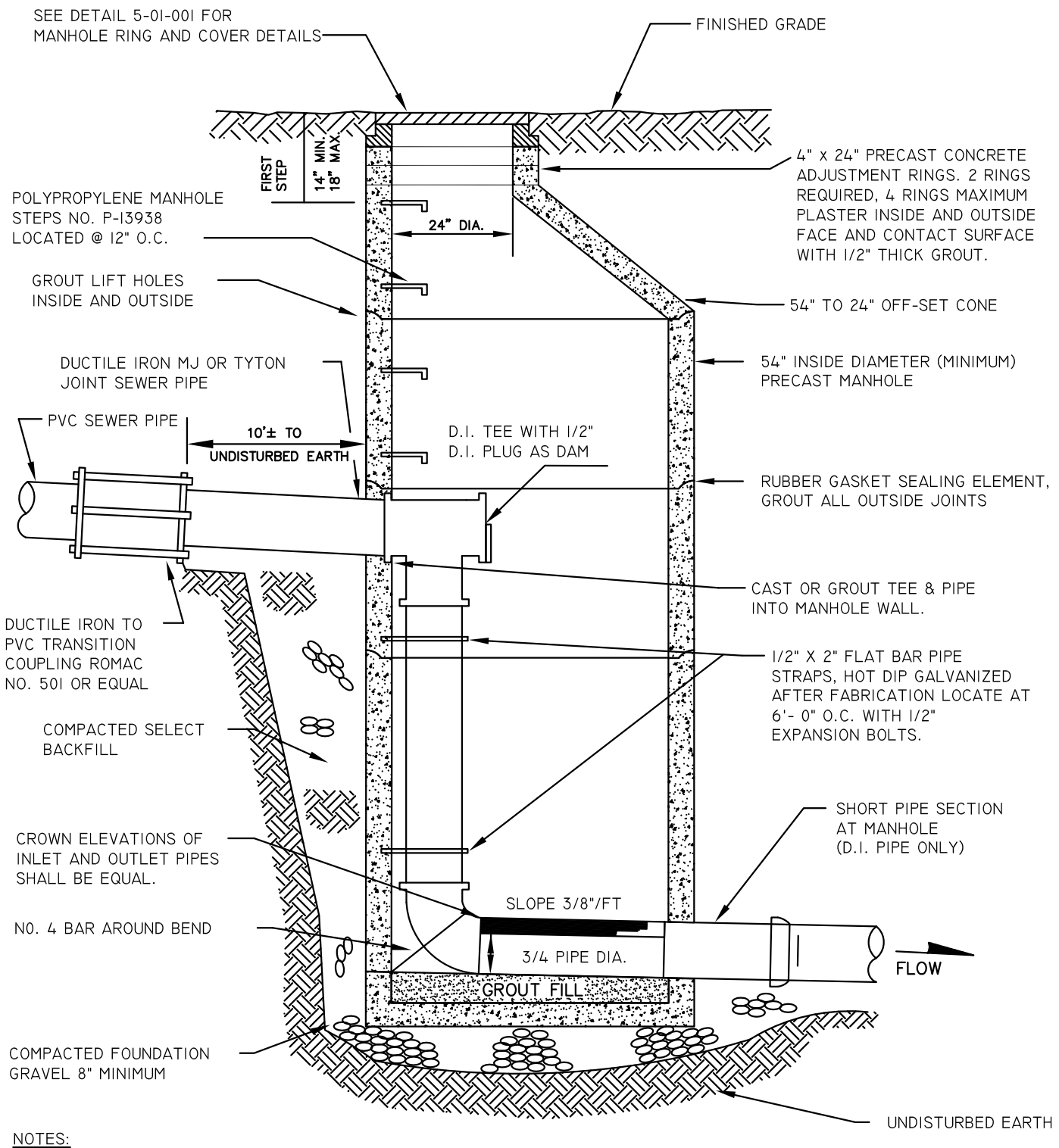

NOTES:

1. PIPE CONNECTIONS TO MANHOLES SHALL BE AS FOLLOWS: PVC PIPE" CAST OR GROUT A MANHOLE COUPLING INTO WALL. D.I. PIPE: BELL AND SPIGOT JOINT OR FLEXIBLE COUPLING EITHER SHALL BE 12" MAXIMUM DISTANCE FROM MANHOLE WALL. PVC AND D.I. PIPE, OPTIONAL: CORE THE MANHOLE AND CONNECT SEWER PIPE WITH A WATER TIGHT FLEXIBLE RUBBER BOOT IN MANHOLE WALL, KOR-N-SEAL BOOT OR EQUAL.
2. DROP OF GRADE THRU MANHOLE SHALL BE 0.10', UNLESS OTHERWISE APPLICABLE.

City of Duvall

INSIDE DROP CONNECTION FOR SANITARY SEWERS	REVISED 5/10/07
STANDARD PLAN	5-140-001

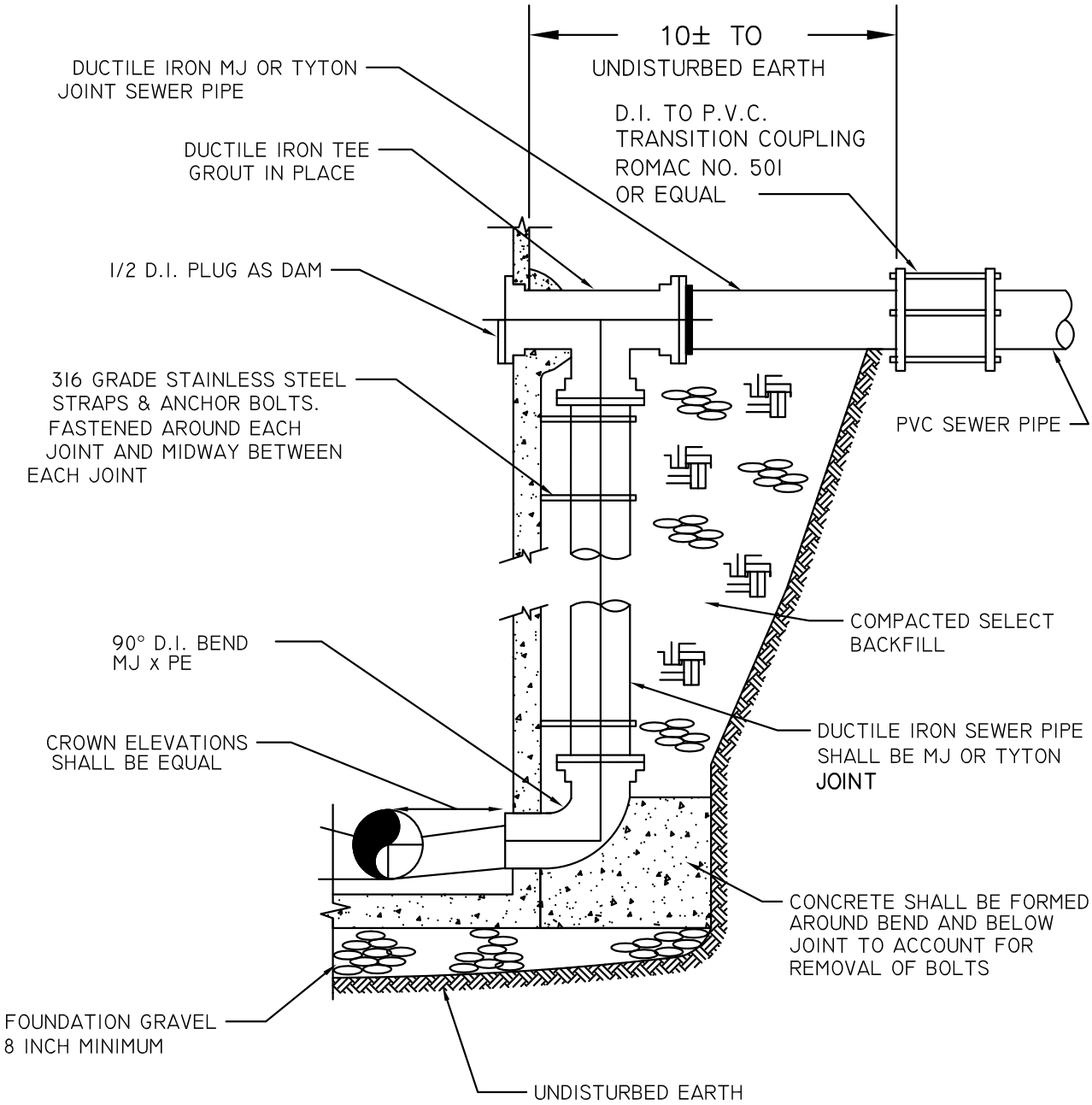

City of Duvall

OUTSIDE DROP CONNECTION FOR SANITARY SEWERS	REVISED 5/10/07
STANDARD PLAN	5-140-002

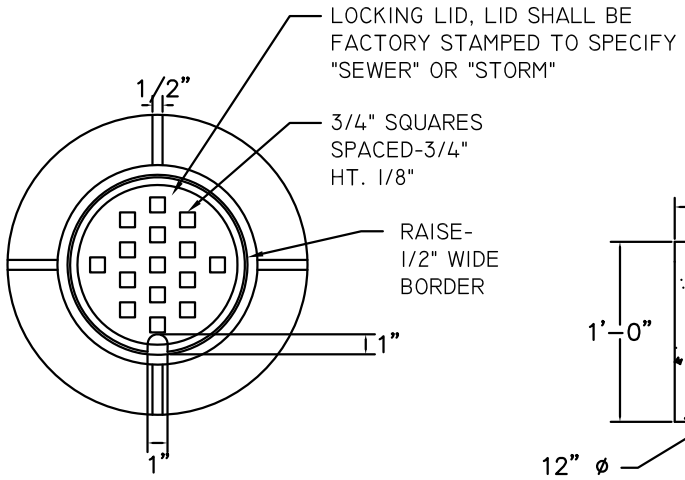

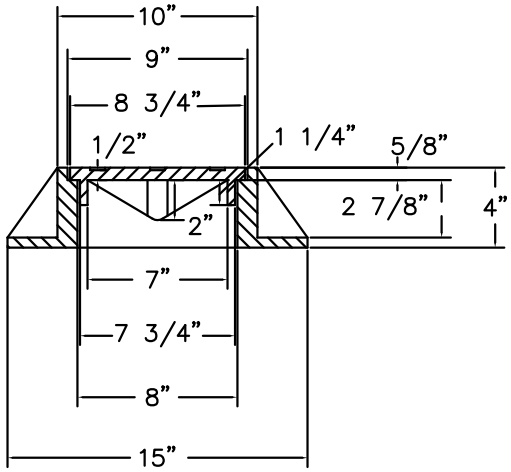

CAST IRON RING AND COVER

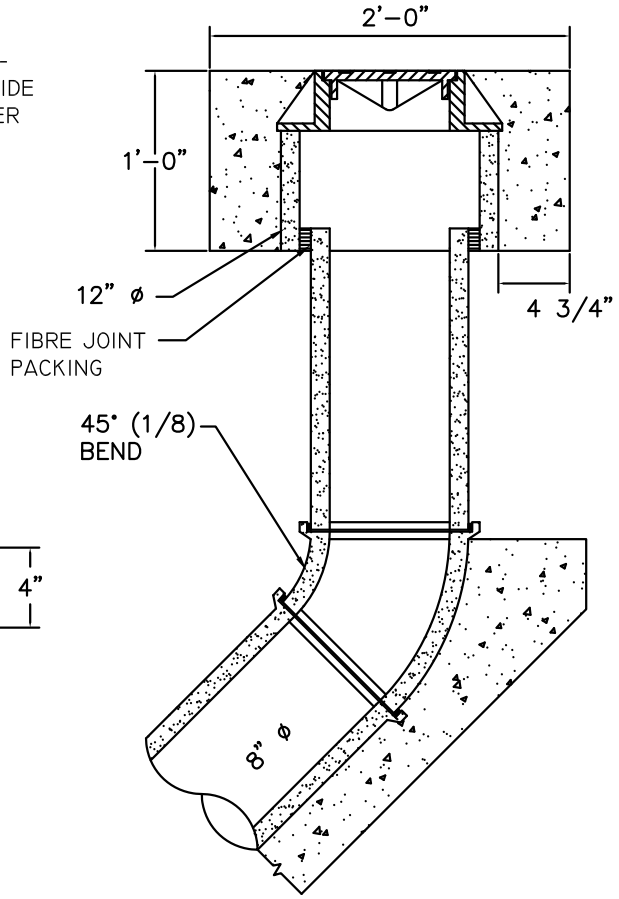

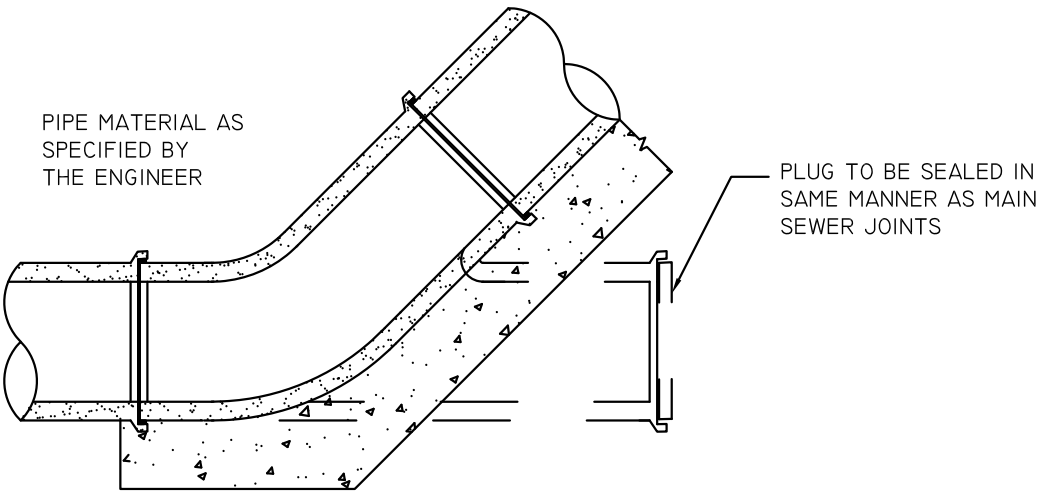

City of Duvall

8" CLEAN-OUT	REVISED 5/10/07
STANDARD PLAN	5-145-001