City of Duvall

Small Town. Real Life.

Comprehensive Water System Plan

MSA

Murray, Smith & Associates, Inc.

May 2012

CITY OF DUVALL

COMPREHENSIVE WATER SYSTEM PLAN

MAY 2012

Prepared by:

City of Duvall Public Works Staff

14525 Main Street NE, PO Box 1300
Duvall, WA 98019
Contact: Shaun Tozer
425.788.3434

Murray, Smith & Associates, Inc.

Engineers/Planners

2707 Colby Avenue, Suite 1110
Everett, Washington 98201-3566
Contact: Thomas Lindberg, P.E.
425.252.9003

In association with:

FCS Group, Inc.

Contact: Courtney Black
425.867.1802

10-1167

THIS PAGE INTENTIONALLY LEFT BLANK

City of Duvall
Comprehensive Water System Plan
Table of Contents

Chapters **Page**

Executive Summary ES-1
Overview and Purpose ES-1
Changes Since the Last Plan Update ES-1
Summary of Key Elements ES-2

Chapter 1 Introduction 1-1
Water System Ownership and Management 1-1
Overview of Existing System 1-1
Authorization and Purpose 1-2
Summary of Plan Contents 1-3
Definition of Terms 1-3
Abbreviations 1-5

Chapter 2 Water System Description 2-1
Introduction 2-1
Water Service Area 2-1
Water Service Agreements 2-2
Satellite System Management 2-2
Existing Water Facilities 2-3
Water System Operation 2-11
Adjacent Water Systems 2-13

Chapter 3 Land Use and Population 3-1
Introduction 3-1
Compatibility with Other Plans 3-1
Land Use 3-3
Population 3-4

Chapter 4 Water Demands 4-1
Introduction 4-1
Current Population and Service Connections 4-1
Existing Water Demands 4-1
Future Water Demands 4-11
Water Use Data Collection 4-14
Water Availability Review 4-16

Chapter 5 Policies and Design Criteria 5-1
Introduction 5-1
Water Service Policies 5-2
Water Supply Policies 5-4

Water Policies and Design Criteria 5-5
Financial Policies 5-10
Organizational Policies 5-11

Chapter 6 Water Source and Quality 6-1
Introduction 6-1
Primary Water Source 6-1
Taylors Landing Well 6-4
Source Water Quality and Treatment 6-6
Distribution System Water Quality 6-7
Planning of Future Water Supplies 6-9

Chapter 7 Operations and Maintenance 7-1
Introduction 7-1
Normal Operations 7-1
Reliability and Emergency Operations 7-10
Preventive Maintenance 7-12
Staffing 7-14
Operations and Maintenance Improvements 7-16

Chapter 8 Water System Analyses 8-1
Introduction 8-1
Pressure Zones 8-1
Supply Stations 8-2
615 Zone Booster Pump Station 8-3
Storage Facilities 8-5
Distribution and Transmission System 8-7
Pressure Reducing Stations 8-10
Telemetry and Supervisory Control System 8-10
System Capacity 8-10

Chapter 9 Water System Improvements 9-1
Introduction 9-1
Description of Improvements 9-1
Project Cost Estimates 9-8
Prioritizing Improvements 9-8
Schedule of Improvements 9-11

Chapter 10 Financial Plan 10-1
Introduction 10-1
Past Financial Performance 10-1
Current Financial Structure 10-3
Available Funding Assistance and Financing 10-5
Funding and Financing the CIP 10-11
Revenue Requirements Forecast 10-12
Existing Rate Structure 10-15
Conclusion 10-16

Charts

Page

Chart 4-1 2009 Water Connections by Customer Class 4-3
Chart 4-2 2009 Water Consumption by Customer Class 4-3
Chart 4-3 Past and Future Water Demands 4-13

Tables

Page

Table 1-1 Water System Ownership and Management 1-1
Table 1-2 Water System Data 1-2
Table 2-1 Water Main Inventory 2-9
Table 3-1 Historical Population and Future Projections 3-5
Table 4-1 Average Annual Metered Consumption and Service Connections 4-2
Table 4-2 2009 Largest Water Users 4-4
Table 4-3 Historical Supply and Per Capita Demands 4-5
Table 4-4 2009 Demands by Pressure Zone 4-6
Table 4-5 Demands by Supply Facility 4-6
Table 4-6 Metered Supply and Consumption Comparison 4-7
Table 4-7 2009 Estimated Distribution System Leakage 4-8
Table 4-8 Equivalent Residential Units (ERUs) 4-9
Table 4-9 Peak Day Demands and Peaking Factors 4-10
Table 4-10 General Fire Flow Requirements 4-11
Table 4-11 Future Water Demand Projections 4-12
Table 4-12 Future ERU Projections 4-14
Table 6-1 City of Duvall Water Quality Monitoring Requirements 6-9
Table 7-1 Organization Chart 7-2
Table 7-2 Personnel Certification 7-2
Table 7-3 Equipment and Supplies 7-4
Table 7-4 Staffing Requirements 7-15
Table 7-5 Future Storage Capacity Evaluation 7-7
Table 7-6 Fire Flow Analysis Summary 7-10
Table 7-7 Existing System Capacity Analysis 7-11
Table 7-8 20-Year Projected System Capacity Analysis 7-12
Table 8-1 Minimum and Maximum Distribution System Pressures 8-2
Table 8-2 Supply Station Capacity Evaluation 8-3
Table 8-3 615 Zone Booster Pump Station Capacity Evaluation 8-4
Table 8-4 Existing Storage Capacity Evaluation 8-6
Table 8-5 Future Storage Capacity Evaluation 8-7
Table 8-6 Fire Flow Analysis Summary 8-10
Table 8-7 Existing System Capacity Analysis 8-11
Table 8-8 20-Year Projected System Capacity Analysis (Maximum Projection) 8-12
Table 9-1 Water System Improvements Completed Since 2004 9-2
Table 9-2 Annual Water Main Improvements (CIP WM1) Completed Since 2004 9-3
Table 9-3 Capital Improvement Program Projects 9-4
Table 9-4 Water Main Unit Costs for Construction 9-8

Table 9-5 Water Main Improvements Priority Ranking Criteria 9-9
Table 9-6 Water Main Improvements Priority Ranking - Sorted by CIP Number..... 9-10
Table 9-7 Water Main Improvements Priority Ranking - Sorted by Total Points..... 9-10
Table 9-8 Planned Improvements Implementation Schedule..... 9-12
Table 10-1 Fund Resources and Uses Arising from Cash Transactions - 401 Water Fund..... 10-2
Table 10-2 Fund Resources and Uses Arising from Cash Transactions - 407 Water CIF..... 10-3
Table 10-3 General Facilities Charge Calculation 10-6
Table 10-4 2012 General Facilities Charges by Meter Size 10-6
Table 10-5 Summary of CIP Costs to Be Funded 10-11
Table 10-6 Capital Funding Plan..... 10-12
Table 10-7 Revenue Requirements Forecast 2011 through 2017 10-14
Table 10-8 Projected 2012-2017 Water Rates 10-15
Table 10-9 Affordability Test..... 10-16

Figures Page

Figure 2-1 Existing Water System..... 2-14
Figure 2-2 Existing Water System Hydraulic Profile 2-15
Figure 2-3 Service Area and Adjacent Water Systems..... 2-16
Figure 3-1 Future Land Use Map 3-6
Figure 6-1 SPU's Regional Water Supply System..... 6-3
Figure 9-1 Proposed Water System Improvements 9-13
Figure 9-2 Proposed System Hydraulic Profile 9-14

Appendices

Appendix A Water Service Area Agreements
Appendix B Water Supply Contract
Appendix C Water Facilities Inventory (WFI) Form
Appendix D Water System Facility Data
Appendix E Consistency Statement Checklist
Appendix F SEPA Checklist
Appendix G Water Use Efficiency Program
Appendix H Water System Construction Standards
Appendix I Cross Connection Control Program
Appendix J Wellhead Protection Program
Appendix K Water Right Certificate & Self-Assessment Forms
Appendix L Water Quality Monitoring Plan
Appendix M Annual Water Quality Report
Appendix N Water Ordinances
Appendix O Agency Review Comments

Executive Summary

OVERVIEW AND PURPOSE

This water system plan is an update to the City of Duvall November 2004 Comprehensive Water System Plan, which received Washington State Department of Health (DOH) approval in May 2005. The City is required to update and submit a water system plan to DOH for review and approval every six years in accordance with current drinking water regulations under WAC 246-290-100.

The purpose of this updated plan is to meet these regulatory requirements and to provide the City with a useful working document to guide the planning, scheduling, and budgeting of water system improvements. This updated plan will also be used by City staff to help maintain the water system to ensure both existing and future customers are provided with a safe and reliable supply of drinking water and fire protection. The planning period for this water system plan is 20 years.

CHANGES SINCE THE LAST PLAN UPDATE

Regulatory Changes

Several regulatory changes affecting water system plans have occurred since 2004. These include updated drinking water regulations that were published by DOH and codified under WAC 246-290 in 2009, updated water system design guidelines that were published by DOH in 2009 under the "Water System Design Manual" title, and requirements from the 2003 Municipal Water Law, which include the Water Use Efficiency Rule that was implemented in January 2007 and summarized in WAC 246-290-810.

Water System Changes

The City has completed several water system improvement projects since the last water system plan was completed in 2004. These include replacement of much of the aging and undersized asbestos-cement water main within Downtown Duvall, retirement of pressure reducing stations due to improved water main looping, and pressure relief station improvements within the 330 and 485 Zones that will protect the water system from high pressures. Since 2004 City staff have developed GIS water system mapping, which includes more accurate refinement of the City's retail water service area and future water service area boundaries.

SUMMARY OF KEY ELEMENTS

The City's water system plan presents a description of the existing water system and service area, forecast of future water demands, policies and design criteria for water system operation and improvements, water system analyses, the operations and maintenance program, a schedule of improvements, and a financial plan to accomplish the improvements. A summary of the key issues related to these elements is provided in the following sections. The water system plan also includes several ancillary elements that are included in the appendix, which address water use efficiency, cross-connection control, water quality monitoring, and wellhead protection.

Water Service Area

The City provides water service to approximately 2,254 customer accounts throughout its water service area for a population of approximately 6,646 people in 2009. The retail water service area includes the city limits and parcels immediately adjacent to the city limits. The future water service area includes areas to the north, south, east, and west within the Urban Growth Area (UGA) and unincorporated King County outside of the retail water service area. The City provides water service to mostly single family residents, which make up approximately 93 percent of all accounts and use approximately 83 percent of all water supplied, as shown below.

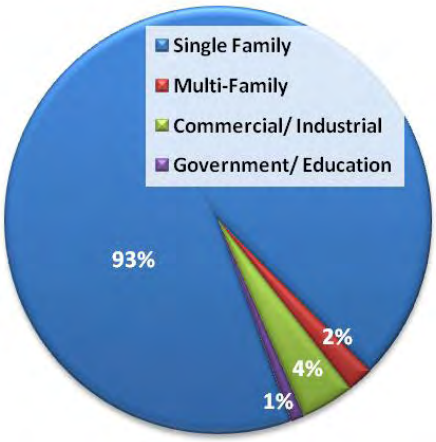

2009 Water Connections

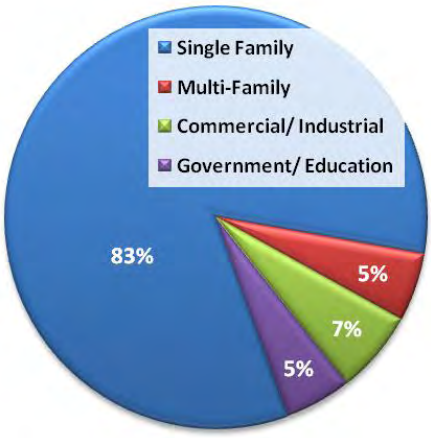

2009 Water Consumption

Past Water Usage and Water Use Efficiency

Total system-wide water usage has increased by less than 4 percent from 2004 to 2009. During this same time period, the average amount of water demand per person has decreased from approximately 90 gallons per day in 2004 to approximately 78 gallons per day in 2009. This trend of decreasing water demand on a per capita basis is likely the result of water use efficiency (i.e., conservation) practices and an increase in the number of homes with water efficient plumbing. The City's 2004-2009 average per capita demand of 83 gallons per day and average demand per equivalent residential unit of 196 gallons per day are slightly less than the average for the Puget Sound area.

The City's average annual amount of distribution leakage from the rolling 3-year average of 2007-2009 was 5.6 percent, which is below the Water Use Efficiency Rule mandated maximum of 10 percent. The City's Water Use Efficiency Program identifies a water use reduction goal of one percent per year through the year 2014. This goal was officially adopted by resolution of the Duvall City Council in 2008 (resolution 08-06).

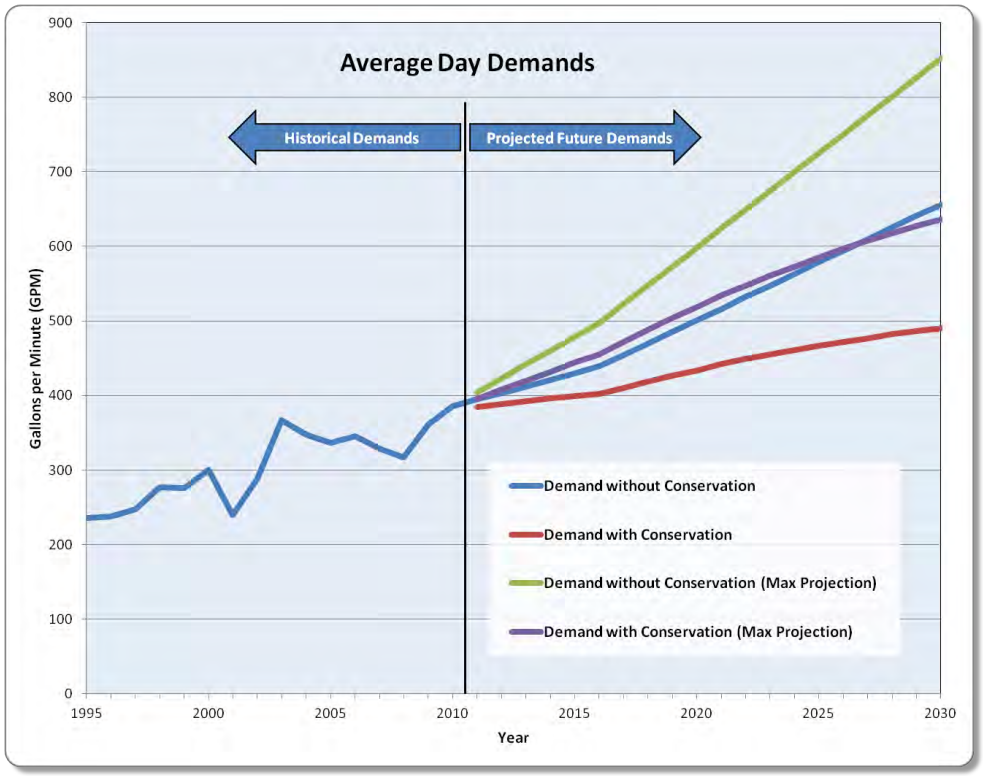

Past and Future Water Demands

Future Water Demands and Water Supply

Overall water demand within the City's system is estimated to increase between approximately 4 and 14 percent within the next six years and between approximately 27 and 121 percent within the next 20 years, depending on the amount of future water use reductions from the City's water use efficiency program and the rate at which growth occurs in the system. The City has sufficient water supply capacity from its two existing Tolt Pipeline connections to meet the demand requirements of the system through the 20-year planning period.

Water Source and Quality

The City receives its water from Seattle Public Utilities (SPU) under the terms of the 2011 Water Purveyor Contract, which will expire at the end of 2061. Water that the City receives from SPU is from the Tolt River source, which is located approximately 15 miles east of the City.
The City relies on the personnel and procedures of SPU to provide a reliable and high quality supply of water to the City's system. SPU is responsible for the quality of the water from the

source to the City's two metered supply connections. The City is responsible for water quality within its water service area boundary. The City monitors water quality in its system, but does not provide water treatment; all water treatment is provided by SPU. Source water quality has historically been excellent with very few exceptions.

Operations and Maintenance

The City's operations and maintenance organization is staffed by well-qualified, technically trained personnel. City staff regularly participates in safety and training programs to keep abreast of the latest changes in the water industry and to ensure a smooth and safe operation of the water system. The current staff of supervisory and maintenance personnel have effectively operated and maintained the water system in the past. The City plans to add staff as necessary to properly maintain the system and to keep up with system growth, and as the budget allows.
The City has taken several steps to prepare for emergency situations. The City's Water System Emergency Response Plan provides information to prepare and assist the City in responding to emergency events. The City also conducted a vulnerability assessment of its water system in June 2004. The City's Water Shortage Response Plan identifies procedures for managing water demand during a water supply emergency or shortage situation. Water system improvements completed by the City over the last several years and proposed improvements identified in this water system plan will reduce the vulnerability of the water system during emergency situations.

Water System Analysis

The existing water system was analyzed to determine its ability to meet the policies and design criteria of the City and those mandated by the DOH. Several analyses were performed to evaluate all components of the water system under both existing and future water demand conditions. The results of the analyses were used to identify and size improvements for the water system. The results of the analyses are summarized below:

- The City's existing reservoirs and Tolt supply stations have adequate capacity for the next 20 years.
- Improvements to the Big Rock Road 2.2 MG Reservoir are necessary to improve water quality in the reservoir and to make more storage available to the system.
- The Crestview Estates 0.5 MG Reservoir and Big Rock Road 2.2 MG Reservoir should have seismic evaluations performed to determine their ability to withstand a seismic event and to identify necessary seismic improvements.
- The 615 Zone Booster Pump Station has adequate capacity for at least the next six years, but will need improvements to increase its capacity before the end of the 20-year planning period.
- The Tolt 2 Supply Station transmission main south of NE 144th Place, needs to be replaced to increase flow and resolve deficiencies related to undesirable pipe material and aging water main.
- Remaining aging deficient asbestos-cement water mains in NE Stella Street and NE Kennedy Drive need to be replaced.
- Water main looping improvements are required to improve flow and water quality.

- Additional telemetry, operation and control improvements are necessary to simplify the operation of the water system and optimize control of the facilities with reduced operation costs.

Planned Water System Improvements and Financing Plan

Improvements to the system are primarily necessary to resolve existing system deficiencies, but also to improve operations and accommodate future water customers. Improvements identified for the first six years of the capital improvement program (2011 - 2016) are estimated to cost approximately $2,422,000, which results in an average expenditure of approximately $404,000 per year (in 2011 dollars). Improvements in the following six years (2017 – 2022) are estimated to cost approximately $3,452,000.

The financial plan is intended to illustrate the feasibility of funding the operation and maintenance of the water system and planned capital improvements for the next six years. The first six years of capital improvements can be funded from existing capital reserves, general facilities charge revenues, and revenue bonds. The City has updated the water system general facilities charge and plans to implement the new charge beginning in 2012. Moderate rate increases between three and five percent per year will be necessary during the next six years to support the future costs of operations and maintenance and capital improvements.

1

Introduction

WATER SYSTEM OWNERSHIP AND MANAGEMENT

The City of Duvall (City) is a municipal corporation that owns and operates a public water system within its corporate boundaries. Water system data on file at the Department of Health (DOH) for the City is shown below in Table 1-1.

Table 1-1
Water System Ownership Information

Information Type	Description
System Name	City of Duvall
System Type	Group A - Community - Public Water System
County	King County
System ID Number	207508
Owner Number	1625
Address	14525 Main St. NE - P.O. Box 1300, Duvall, WA 98019
Owner Contact	Mr. Steven Leniszewski, P.E., Public Works Director

OVERVIEW OF EXISTING SYSTEM

The City provided service to approximately 2,276 customer connections, or 2,693 equivalent residential units (ERUs) in 2010, within the City's existing retail water service area, which extends beyond the city limits. The city limits comprise an area of approximately 2.5 square miles, the existing retail water service area is approximately 3.5 square miles, and the future water service area is approximately 5.6 square miles. However, most of the future water service area is undeveloped at this time. The 2010 population within the city limits was 6,695.

All water supply to the City is provided by Seattle Public Utilities (SPU) through its Tolt supply pipeline at two supply stations. This water is fluoridated and chlorinated by SPU, so additional treatment by the City is not required. Water storage is provided by two reservoirs that have a total maximum capacity of 2.7 million gallons (MG). In addition, the City's water system has five pressure zones with 15 pressure reducing stations, one closed zone booster pump station, three pressure relief stations, and 39 miles of water main. A summary of 2010 water system data for the City's system is shown in Table 1-2:

Table 1-2
Water System Data

Description	Data
Population (2010)	6,695
City Limits (2010)	2.5 square miles
Existing Retail Water Service Area (2010)	3.5 square miles
Future Water Service Area (2010)	5.6 square miles
Total Connections (2010)	2,276
Total ERU's (2010)	2,693
Demand per ERU (2004 - 2009 Average)	196 gallons per day (gpd)
Demand per Capita (2004 - 2009 Average)	83 gallons per day (gpd)
Annual Supply (2009)	189.6 million gallons (MG)
Average Day Demand (2009)	361 gallons per minute (gpm)
Unaccounted-for Water (2007 - 2009 Average)	5.6%
Peak Day/Average Day Demand Factor (estimated)	2.2
Peak Hour/Peak Day Demand Factor (estimated)	1.8
Number of Pressure Zones (2010)	5
Number of Supply Stations & Total Capacity (2010)	2 (2,960 gpm)
Number of Pump Stations & Total Capacity (2010)	1 (2,000 gpm)
Number of Reservoirs & Total Capacity (2010)	2 (2.7 MG)
Number of Pressure Reducing Stations (2010)	15
Number of Pressure Relief Stations (2010)	3
Total Length of Water Main (2010)	39 miles

AUTHORIZATION AND PURPOSE

The City authorized Murray, Smith & Associates, Inc (MSA) in August 2010 to prepare a comprehensive water system plan as required by state law under WAC 246-290-100. In accordance with WAC 246-290-100, the plan shall be updated and submitted to the State Department of Health every six years. The previous comprehensive water system plan was prepared for the City in 2004 and approved by DOH in May 2005. The purpose of this updated comprehensive water system plan is as follows:

- To evaluate historical growth and water usage for use in projecting future water demands.
- To inventory, describe and analyze the existing water system to determine if it meets minimum requirements mandated by DOH and the City's own policies and design criteria.
- To prepare a capital improvement program (CIP) that identifies water system improvements which resolve existing system deficiencies and accommodate future needs of the system for at least 20 years into the future.
- To prepare an implementation schedule of improvements and financing plan that meets the goals of the financial program.

- To review and update the water conservation program, water quality program, cross-connection program, and wellhead protection program.
- To document the operations and maintenance program.
- To comply with all other water system plan requirements of DOH.

SUMMARY OF PLAN CONTENTS

A brief summary of the content of the chapters in the plan is as follows:

- Executive Summary: Provides a brief summary of the key elements of this plan.
- Chapter 1 - Introduction: Provides an overview of the City's water system, the objectives of the plan, and the plan organization.
- Chapter 2 - Water System Description: Presents the water service area, describes the existing water system, and identifies the adjacent water purveyors.
- Chapter 3 - Land Use and Population: Presents related plans, land use, and population characteristics.
- Chapter 4 - Water Demands: Presents historical water use patterns, existing water demands, and projected future demands.
- Chapter 5 - Policies and Design Criteria: Presents the City's water service policies, water system operation policies, and water system design criteria.
- Chapter 6 - Water Source and Quality: Discusses the City's water source and the results of past water quality monitoring.
- Chapter 7 - Operations and Maintenance: Discusses the City's operations and maintenance program.
- Chapter 8 - Water System Analyses: Presents the results of the water system analyses and summarizes existing system deficiencies.
- Chapter 9 - Water System Improvements: Presents the proposed water system improvements, their estimated costs, and implementation schedule.
- Chapter 10 - Financial Plan: Summarizes the financial status of the City's water utility and presents a program for funding the water system improvements.
- Appendices: Contain additional information and plans that supplement the chapters listed above.

DEFINITION OF TERMS

The following terms are used throughout this plan:

General Facilities Charge: A one-time fee paid by a property owner when connecting to the water system. This fee pays for the new customers' equitable share of the cost of the existing system. This fee offsets the costs of providing water to new customers and recognizes that the existing water system was largely built and paid for by the existing customers.

Consumption: The true volume of water used by the water system's customers. The volume is measured at each customer's connection to the distribution system.

Connection Charge: A one-time fee paid by a property owner when connecting to the City's system and is made up of both the General Facilities Charge and Meter Installation Charge.

Cross-Connection: A physical arrangement that connects a public water system, directly or indirectly, with anything other than another potable water system and, therefore, presents the potential for contaminating the public water system.

Demand: The quantity of water required from a water supply source over a period of time necessary to meet the needs of domestic, commercial, industrial, and public uses, and to provide enough water to supply fire fighting, system losses, and miscellaneous water uses. Demands are normally discussed in terms of flow rate, such as million gallons per day (MGD) or gallons per minute (gpm), and are described in terms of a volume of water delivered during a certain time period. Flow rates pertinent to the analysis and design of water systems are:

- Average Day Demand (ADD): The total amount of water delivered to the system in a year divided by the number of days in the year.
- Peak Day Demand (PDD): The maximum amount of water delivered to the system during a 24 hour time period of a given year.
- Peak Hour Demand (PHD): The maximum amount of water delivered to the system, excluding fire flow, during a one hour time period of a given year. A systems peak hour demand usually occurs during the same day as the peak day demand.

Distribution System Leakage (DSL): The annual amount of water calculated from the difference between the measured amount of water supplied into the system and the measured amount of water taken out of the system for consumption and other authorized uses. Authorized uses include both metered and unmetered water uses. Water use that is unmetered must be estimated to be classified as an authorized use. Examples of common unmetered water uses include the use of hydrants for flushing, fire fighting, and construction. The calculated DSL volume consists primarily of water loss through leaks in the water system, but may also include meter inaccuracies, meter reading errors, water theft, and reservoir overflows.

Equivalent Residential Units (ERU's): One ERU represents the amount of water used by one single family residence for a specific water system. The demand of other customer classes can be expressed in terms of ERU's by dividing the demand of each of the other customer classes by the demand represented by one ERU.

Existing Retail Water Service Area: Includes all areas where the water system already provides direct service, remote service, or where service connections are currently available, and may include areas where new service is proposed.

Fire Flow: The rate of flow of water required during fire fighting, which is usually expressed in terms of gallons per minute (gpm).

Future Water Service Area: Includes all areas outside of the existing retail water service area where the City has the duty to provide water service to future customers.

Head: A measure of pressure or force by water. Head is measured in feet and can be converted to pounds per square inch (psi) by dividing feet by 2.31.

Head Loss or Pressure Loss: Pressure reduction resulting from pipeline wall friction, bends, physical restrictions, or obstructions.

Hydraulic Elevation: The height of a free water surface above a defined datum; the height above the ground to which water in a pressure pipeline would rise in a vertical open-end pipe.

Maximum Contaminant Level (MCL): The maximum permissible level of contaminant in the water that the purveyor delivers to any public water system user, measured at the locations identified under WAC 246-290-310.

Meter Installation Charge: The installation charge or hook-up fee is a fee paid by a property owner to reimburse the City for the cost incurred to make the physical connection to the water system. This cost includes both direct and indirect cost for installing the service line off of the system's water main to the customer's water meter.

Potable: Water suitable for human consumption.

Pressure Zone: A portion of the water system that operates from sources at a common hydraulic elevation. For example, 555 Zone refers to the City's second highest pressure zone which has a reservoir with a maximum water elevation (i.e., overflow elevation) of 555 feet.

Purveyor: An agency, special purpose district, subdivision of the State, municipal corporation, firm, company, mutual or cooperative association, institution, partnership, or persons or other entity owning or operating a public water system. Purveyor also means the authorized agents of such entities.

Supply: Water that is delivered to a water system by one or more supply facilities which may consist of supply stations, booster pump stations, and wells.

Storage: Water that is "stored" in a reservoir to supplement the supply facilities of a system and provide water supply for emergency conditions. Storage is broken down into the following five components which are defined and discussed in more detail in Chapter 7: operational storage, equalizing storage, standby storage, fire flow storage, and dead storage.

Unaccounted-for Water: Water that is measured as going into the distribution system but not metered as going out of the system.

ABBREVIATIONS

The following abbreviations are used in this plan:

ADD:	Average Day Demand
AWWA:	American Water Works Association
CCR:	Consumer Confidence Report
CIP:	Capital Improvement Program
City:	City of Duvall
DOH:	Department of Health
DSL:	Distribution System Leakage
EPA:	Environmental Protection Agency
ERU:	Equivalent Residential Unit
fps:	feet per second
GMA:	Growth Management Act
gpm:	gallons per minute
MCL:	Maximum Contaminant Level
MG:	Million Gallons
MGD:	Million Gallons per Day
mg/l:	milligrams per liter
PDD:	Peak Day Demand

PHD:	Peak Hour Demand
psi:	pounds per square inch
SDWA:	Safe Drinking Water Act
SPU:	Seattle Public Utilities
WAC:	Washington Administrative Code

2

Water System Description

INTRODUCTION

This chapter describes the City of Duvall's (City) existing and future water service areas and water service agreements, and provides a thorough description of the water system and its individual components. The results of the evaluation and analyses of the existing water system are presented later in **Chapter 8**.

WATER SERVICE AREA

History

Duvall was settled in the late 1800's, originally as a small lumber and farming based community. It was later incorporated as a city in 1913 and in the late 1970's the City began transforming into a suburban bedroom community with a rapidly growing population. The City currently provides water service to approximately 2,276 customer connections.

Topography

Duvall's service area is located on the east side of the Snoqualmie River Valley. The topography of the area served by the City's water system varies greatly in elevation. The east portion of the City is located on an upland plateau at an elevation of approximately 500 feet. The west portion of the City is located on a west-facing slope that extends down to the Snoqualmie River at an elevation of approximately 40 feet. The west edge of the City is located within the Snoqualmie River floodplain.

Water Service Areas

The City of Duvall is located in north central King County, Washington, on the banks of the Snoqualmie River. The City's corporate boundary encompasses an area of approximately 2.5 square miles, as shown in **Figure 2-1**. The existing water system extends as far north as NE Cherry Valley Road, south to approximately Big Rock Road NE and east to 292nd Avenue NE. The Snoqualmie River serves as the distribution system's westerly boundary.

The City's retail water service area boundary was defined in the 2004 Comprehensive Water System Plan as the water service area boundary identified in the 1989 East King County Coordinated Water System Plan. This updated comprehensive water system plan is redefining the City's two water service areas as follows. The existing retail water service area includes all areas where the water system already provides direct service, remote service, or where service connections are currently available, and may include areas where new service is proposed. The existing retail water service area boundary is generally located within one parcel of the city limits or existing water mains, as shown in **Figure 2-1**. The City is responsible for providing public water service, utility management and water system development within this area.

The future water service area includes all areas outside of the existing retail water service area where the City has the duty to provide water service to future customers. This is the same boundary as the water service area boundary identified in the 1989 East King County Coordinated Water System Plan. The City's future water service area boundary extends north to NE Cherry Valley Road, west to the Snoqualmie River, and south and east to the boundary of King County Water District No. 119. The area outside of the existing retail water service area boundary but within the future water service area boundary could be incorporated into the existing retail water service area in the future.

WATER SERVICE AGREEMENTS

Water Service Area Agreement

All purveyors located within the East King County Critical Water Supply Service Area are required to have a water service area agreement that identifies the external boundary of their water service area. The City updated its water service area agreement in 1997 as part of the 1996 East King County Coordinated Water System Plan Update. A copy of this agreement is contained in **Appendix A**.

Seattle Water Supply Contract

The water supply contract is essentially a long-term agreement that requires Seattle Public Utilities (SPU) to supply a reliable source of treated water to the City of Duvall at wholesale prices, based upon the City's long-term commitment for water demand. The original contract, dated November 1981, was amended on June 6, 1994 and was set to expire on January 1, 2012.

The City entered into a new long-term contract with SPU in May 2011 to purchase water supply at wholesale rates. The new contract will remain in effect until January 1, 2062, at which time it will terminate. A copy of the current water supply contract is contained in **Appendix B**. Additional information on the water supply contract and the City's long-term water supply planning is presented in **Chapter 6**.

SATELLITE SYSTEM MANAGEMENT

A Satellite Management Agency (SMA) is defined as a person or entity that is certified by the Department of Health (DOH) to own or operate more than one public water system without the necessity for a physical connection between such systems. SMA's were created to stop the proliferation of small water systems, many of which could not meet federal and state water quality and water system planning regulations. Based on the success of these SMA's, DOH made recommendations to the legislature to include rules for designating entities as qualified SMA's.

In July 1995, Senate Bill 5448 became a law that governs approvals of new water systems and sets forth requirements for SMA's. The goal of the law is to ensure that the people of this state receive safe and reliable water supplies in the future from professionally managed or properly operated water systems.

SMA's can provide 3 different levels of service.

1. Ownership of the satellite system
2. Operations and management of the satellite system
3. Contract services only

The service can be provided to new systems, existing systems which are no longer viable or existing systems placed into receivership status by DOH.

The City of Duvall, in accepting its service area, has accepted responsibility for providing water service to all customers in this area. Currently, only the Riverview School District's small water systems exist within the City's water service area boundary. The populated areas surrounding the City's service area are currently being served by large, stable water systems that are unlikely to be a future satellite water system operated by the City.

In the event that a neighboring water system needs the City's assistance, Duvall will cooperate to provide the necessary satellite management services to meet their needs. Upon agreement between the two systems to have the City provide these services, the City will pursue the necessary steps to become an approved SMA. These include:

- Submitting a notice of intent to the DOH;
- Participating in a pre-submittal meeting with the DOH;
- Submitting a SMA plan to DOH that meets the plan requirements;
- Obtaining approval of the plan from DOH.

EXISTING WATER FACILITIES

This section provides a detailed description of the existing water system and the current operation of the facilities. The analysis of the existing water facilities is presented in **Chapter 8**.

General water system facility data is summarized on the Department of Health Water Facilities Inventory (WFI) form. A copy of this form is contained in **Appendix C**. Detailed data on all of the water system facilities is contained in **Appendix D**.

Pressure Zones

The City serves customers within an elevation range of approximately 57 feet near the banks of the Snoqualmie River to 500 feet near the Crestview Estates Reservoir. The wide elevation range requires that the water pressure be increased or reduced to maintain pressures that are safe and sufficient to meet the flow requirements of the system. This is achieved in the City's system by dividing the water system into five different pressure zones, as shown in **Figure 2-1**. The pressure in each pressure zone is regulated by reservoir levels, pressure reducing station settings,

pump station settings or a combination of these, as illustrated in the hydraulic profile, **Figure 2-2**.

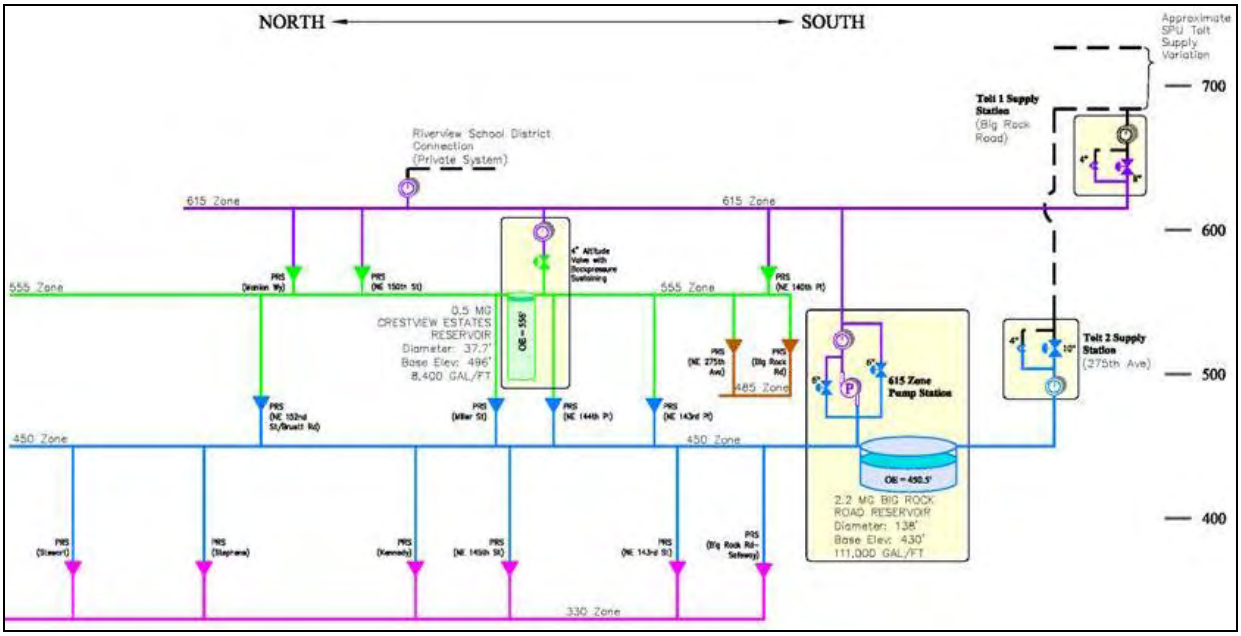

Hydraulic Profile Overview

The pressures in the 450 Zone and the 555 Zone are regulated by reservoir levels, as illustrated in the hydraulic profile, **Figure 2-2**. Pressures in the 450 Zone are established by the surface water level in the Big Rock Road Reservoir, which has an overflow elevation of 450.5 feet. The 450 Zone is primarily located between 3rd Avenue NE and 272nd Avenue NE and serves customers within an elevation range of approximately 170 feet to 300 feet. Pressures in the 555 Zone, which has a maximum hydraulic elevation of 555 feet, are established by the surface water level in the Crestview Estates Reservoir. The 555 Zone is located between 272nd Avenue NE and 278th Avenue NE and serves customers within an elevation range of approximately 299 feet to 442 feet.

The 615 Zone is a closed zone (i.e., a zone without storage), which is supplied directly from the Tolt 1 Supply Station when the hydraulic grade of the Tolt Pipeline is high enough to provide adequate pressures to the 615 Zone. When the hydraulic grade of the Tolt Pipeline is too low to supply the 615 Zone directly, water from the Big Rock Road 2.2 MG Reservoir is pumped into the zone by the 615 Zone Booster Pump Station. This zone serves customers within an elevation range between approximately 406 feet to 497 feet and is primarily located east of 278th Avenue NE.

The 555 Zone is supplied with water from the Crestview Estates 0.5 MG Reservoir, which is filled with water from the 615 Zone. The 555 Zone is also supplied by three pressure reducing stations connected to the 615 Zone during fire flow events or when the Crestview Estates 0.5 MG Reservoir is out of service.

The 485 Zone, which is the system's smallest zone, is supplied through two pressure reducing stations with water from the 555 Zone and is located south of NE 141st Place and west of 278th Avenue NE. Elevations in the 485 Zone range from approximately 294 feet to 372 feet. This zone will be incorporated into the 555 Zone in conjunction with future planned improvements.

The 450 Zone is supplied with water from the Big Rock Road 2.2 MG Reservoir during normal operating conditions. The Tolt 2 Supply Station and four 555 Zone/450 Zone pressure reducing stations provide supplemental supply to the zone during fire flow and other emergency events. Elevations in the 450 Zone range from approximately 187 feet to 332 feet.

The lowest pressure zone, the 330 Zone, is supplied by a series of six pressure reducing stations with water from the 450 Zone. The 330 Zone is predominately located west of 3rd Avenue NE with elevations that range from approximately 57 feet to 235 feet.

Supply Facilities

Introduction

All water supply to the City's system is provided by SPU from its Tolt supply pipeline. Most of the water that the City receives is from the Tolt River source. Water from this source is delivered to the City from east to west in a 66-inch transmission main that is routed approximately two miles south of the City's downtown business district. Water is provided to the City's system from this transmission main through two active metered supply connections. Tolt 1 Supply Station is located near the southeast corner of the City's Urban Growth Area Boundary and Tolt 2 Supply Station is located to the west of Tolt 1 Supply Station.

Tolt 1 Supply Station Interior

Water Treatment

All water treatment is currently provided by SPU. The City's water is chlorinated to disinfect and kill harmful bacteria that may be present in the water and fluoridated to assist in the prevention of tooth decay. Additionally, filtration and ozonation of SPU's Tolt River source is provided by the Tolt Treatment Facility, which became operational at the end of 2000. Additional information on the City's source of supply, water treatment, and water quality monitoring is contained in **Chapter 6**.

Tolt 1 Supply Station

Tolt 1 Supply Station, located near the intersection of NE Big Rock Road and SPU's Tolt Pipeline No. 1 right-of-way, provides supply directly to the 615 Zone and indirectly to all other zones (through pressure reducing stations and an altitude valve). This station was constructed in 1984 and has a capacity of approximately 1,760 gpm. Improvements to the facility were constructed in 1996. Tolt 1 Supply Station consists of two below-grade concrete vaults with a single 8-inch inlet pipe from the Seattle supply system, 12-inch outlet piping to the 615 Zone,

and 4-inch and 8-inch flow control/pressure reducing valves which are located in the larger vault. A 12-inch flow meter is located in the smaller, upstream concrete vault. Both vaults are equipped with sump pumps and intrusion switches.

Tolt 2 Supply Station

Tolt 2 Supply Station, located near the intersection of 274th Avenue NE and SPU's Tolt Pipeline No. 1 right-of-way, provides supply directly to the 450 Zone and indirectly to all other zones (through pump and pressure reducing stations). This station was originally constructed in 1962 and has a capacity of approximately 1,200 gpm. Improvements to the facility were constructed in 1973 and 1996. The station consists of two below-grade concrete vaults with a single 8-inch inlet pipe from the Seattle supply system, 12-inch outlet piping within the meter vault that reduces to 10-inch main to the 450 Zone, and 4-inch and 10-inch flow control/pressure reducing valves that are located in the larger vault. A 12-inch flow meter is located in the smaller, downstream concrete vault. Both vaults are equipped with sump pumps and intrusion switches.

Taylor's Landing Well

Taylor's Landing Well is an artesian well located southwest of the intersection of Main Street NE and NE Allen Street. The City holds a water rights certificate for the use of the well, which is currently disconnected from the water system. Historically, water was hauled from the Taylor's Landing Well to augment low or dry private wells in the unincorporated areas north of Duvall. The City capped the well and closed it to open public use in 2000 for liability reasons. The well is now securely capped and locked and is only used in the summer by the City's Public Works Department to fill water trucks for irrigation purposes.

Taylors Landing Well

Pump Station Facilities

615 Zone Booster Pump Station

The 615 Zone Booster Pump Station is located at the site of the 2.2 MG Big Rock Road Reservoir, which is east of NE Big Rock Road and south of Roney Road. The station was constructed concurrently with the Big Rock Road Reservoir in 1996. The station pumps water from the 450 Zone Big Rock Road Reservoir to the 615 Zone to meet the demand requirements of the 615 Zone and to transfer storage from the 2.2 MG Reservoir to the 0.5 MG Reservoir via an altitude valve.

A CMU block building houses the booster pump station's mechanical and electrical equipment. The station has a total capacity of approximately 2,000 gpm, which is delivered by one 350 gpm vertical turbine pump with a 30 horsepower motor and two 1,000 gpm vertical turbine pumps with 60 horsepower motors. All three pumps are equipped with variable frequency drives. The station was designed to accommodate an additional fourth pump, as needed in the future. A 6-inch pressure relief valve is located on the discharge header and protects the 615 Zone from high pressures during pump operation. A 6-inch altitude valve with backpressure sustaining and pressure relief override is located outside the pump station in a below-grade vault. This control valve allows the transfer of water from the 615 Zone to the 450 Zone Big Rock Road Reservoir when Tolt 1 Supply Station is supplying water to the 615 Zone and protects the 615 Zone from high pressures during this operation. Electronic controls were added to this valve in 2009 to enable more precise control and greater flexibility for the altitude feature of the valve. A stationary engine generator set, located in a room adjacent to the pumps, is equipped with an automatic transfer switch and provides backup power supply to the facility. A 12-inch flow meter is located outside and adjacent to the pump station in a below-grade concrete vault. The site is fully enclosed by a chain link fence. Both the metering vault and pump station building are equipped with intrusion switches.

615 Zone Booster Pump Station

Storage Facilities

450 Zone 2.2 MG Big Rock Road Reservoir

The 2.2 MG Big Rock Road Reservoir, which is located east of NE Big Rock Road and south of Roney Road, provides water storage directly to the 450 Zone and indirectly to the other zones in the system. The reservoir site is shared with the City's 615 Zone Booster Pump Station. The 138-foot diameter, 27-foot tall steel reservoir was constructed in 1996 and provides approximately 111,000 gallons of storage per foot height. The reservoir's base elevation is at approximately 430 feet and the overflow elevation is at 450.5 feet.

615 Zone Booster Pump Station & 450 Zone 2.2 MG Reservoir

The interior of the reservoir was cleaned in 2010 and the exterior was pressure washed in 2010. The reservoir is equipped with an exterior level gauge and has a single 12-inch water main that

serves as its common inlet/outlet pipe. An internal level sensor provides accurate level measurements for data logging and level control purposes. The reservoir may be filled from the 450 Zone with water from Tolt 2 Supply Station through a 12-inch transmission main in Big Rock Road or from the 615 Zone through the 6-inch altitude valve described above. The altitude control valve is located onsite and adjacent to the 615 Zone Booster Pump Station building in a below-grade concrete vault and is equipped with an intrusion switch. The altitude valve is programmed with a delayed opening and is also equipped with backpressure sustaining and pressure relief mechanisms to maintain minimum pressures and to relieve excess pressures in the 615 Zone.

555 Zone 0.5 MG Crestview Estates Reservoir

The 0.5 MG Crestview Estates Reservoir is located near the intersection of NE 144th Street and 283rd Street NE. The reservoir provides storage for the 555 Zone and can provide supplemental storage to the lower pressure zones when supplied through the pressure reducing stations. The 63-foot tall steel reservoir was constructed in 1988 and provides approximately 8,400 gallons of storage per foot height. The reservoir has a base elevation of approximately 496 feet and overflow elevation of 556 feet.

0.5 MG Crestview Estates Reservoir

The interior of the reservoir was cleaned in 2010. A mural is painted on the reservoir's exterior coating. The reservoir is equipped with an exterior level gauge and has a 6-inch water main that serves as its inlet pipe from the 615 Zone and a 12-inch water main that serves as its outlet pipe to the 555 Zone. The reservoir has an elevated inlet pipe that discharges water into the reservoir at an elevation of approximately 545 feet. A 4-inch altitude valve, which controls the level of water in the reservoir, is located on the reservoir's inlet piping in a below-grade concrete vault. A pressure transducer, which measures the pressure of the 615 Zone at this location, is also located in this vault. An 8-inch insertion meter, which was installed in 1996 in a separate below-grade concrete vault upstream of the altitude valve vault, measures the flow rate of water from the 615 Zone to reservoir. Both vaults are equipped with sump pumps and intrusion switches. The reservoir site is fully enclosed and secured with a chain link fence topped with barbed wire.

Cell phone antennas and equipment, owned by AT&T and constructed in 2008, are also located in a leased area of the reservoir site and on the tank itself. Verizon Wireless has also expressed interest in leasing space at this site and a final lease agreement is anticipated before the end of 2011.

Distribution and Transmission System

The City's water system contains more than 39 miles of water main ranging in size from 4-inches to 12-inches. As shown in **Table 2-1**, most of the water main (approximately 68 percent)

within the service area is 8-inch diameter, and approximately three-quarters of all water main is 8-inch diameter or smaller.

Table 2-1
Water Main Inventory

Diameter (inches)	Pipe Material and Length (feet)			Total Length (feet)	% of Total
	AC	PVC	DI		
4	1,547	3,119	3,618	**8,283**	**4.0%**
6	2,287	963	1,408	**4,658**	**2.2%**
8	1,547	31,618	107,638	**140,802**	**67.9%**
10	6,380	1,540	1,250	**9,170**	**4.4%**
12	0	1,783	42,680	**44,463**	**21.4%**
Total Length	**11,761**	**39,022**	**156,594**	**207,376**	**100.0%**
% of Total	**5.7%**	**18.8%**	**75.5%**	**100.0%**	

Pipe Material: AC = asbestos cement, PVC = polyvinyl chloride, DI = ductile iron

All of the water main in the City's system is constructed of asbestos concrete, PVC and ductile iron, with three-quarters of the water main constructed of ductile iron. All new water main projects are required to use ductile iron water main in accordance with the City's development and construction standards.

The oldest water main in the system is the AC water main that was mostly installed in 1962. At 49 years old, this water main is reaching the end of its useful service life, which is generally 50 years for this pipe material. The remaining water main in the system is approximately 30 years old or less and is generally in good condition.

Pressure Reducing Stations

Pressure reducing stations are connections between adjacent pressure zones that allow water to flow from the higher pressure zone to the lower pressure zone by reducing the pressure of the water as it flows through the station, thereby maintaining a safe range of pressures in the lower zone. A pressure reducing station is essentially a below-grade vault (typically concrete) which normally contains two pressure reducing valves, a pressure relief valve, piping, and other appurtenances. The pressure reducing valve hydraulically varies the flow rate through the valve (up to the flow capacity of the valve) to maintain a constant pressure on the downstream side of the valve for water flowing into the lower pressure zone.

Pressure reducing stations can serve multiple purposes. They can function as an active supply facility by maintaining a continuous supply of water into a lower zone that has no other source of supply. The pressure reducing stations that serve the 330 Zone and 485 Zone are this type. Pressure reducing stations can also function as standby supply facilities that are normally

inactive (no water flowing through them). The operation of this type of station is typically triggered by a drop in water pressure near the downstream side of the station. A typical application of this function is a pressure reducing station that is only needed to supply additional water to a lower zone during a fire flow or other emergency situation. The pressure setting of the control valve within the station allows it to remain closed during normal system operation and open only during high demand conditions, like fire flows, to provide the additional supply needed. The pressure reducing stations that serve the 450 Zone and 555 Zone are of this type, since both of these zones have reservoirs that maintain pressures in their zone.

The Duvall water system has a total of 15 pressure reducing stations, as shown in plan view in **Figure 2-1** and in profile view in **Figure 2-2**. Six pressure reducing stations actively supply water from the 450 Zone to the lower 330 Zone, which serves the downtown area. Four pressure reducing stations serve the 450 Zone from the 555 Zone, while the 485 Zone and the 555 Zone are served by a total of two and three pressure reducing stations, respectively. All of the City's PRV stations are located in underground vaults and are not equipped with pressure relief valves. A listing of all pressure reducing stations and related data is contained in **Appendix D**.

Pressure Relief Stations

In 2009, the City installed two pressure relief stations in the 330 Zone and one in the 485 Zone. These stations are intended to relieve excess pressure to the atmosphere during high pressure events, providing protection to both the water system infrastructure and its customers. Additional pressure relief improvements are being evaluated for the 555 Zone and 615 Zone.

Water System Interties

Water system interties are physical connections between two adjacent water systems. A closed isolation valve or control valve is the part of the intertie that normally provides the separation of the two water systems. Emergency supply interties provide water from one system to another during emergency situations only. An emergency situation may occur when a water system loses its main source of supply or transmission main and is unable to provide a sufficient quantity of water to its customers for drinking or fire flow purposes. Normal supply interties provide water from one system to another during non-emergency situations and are typically supplying water at all times. The City does not have interties with adjacent water systems. However, an emergency intertie between the City's water system and the Water District No. 119 water system is possible, should either system become interested in the future.

Telemetry and Supervisory Control System

Successful operation of any municipal water system requires gathering and using accurate water system information. A telemetry and supervisory control system gathers information and can efficiently control a system by automatically optimizing facility operations. A telemetry and supervisory control system also provides instant alarm notification to operations personnel in the event of equipment failure, operation problem, flood, fire, or other emergency situations.

The City's telemetry and supervisory control system was originally installed in 1997 by Systems Interface. The system consists of a master telemetry unit (MTU) at the public works building and remote telemetry units (RTU) at each of the two supply facility sites and two reservoir sites. The RTU's can communicate with the MTU using dedicated leased telephone lines. The system, however, is not quite fully operational for data collection and alarm notification due to equipment issues and extensive damage to the telephone lines during extreme weather events. In 2010, the City began a concerted effort to locate and repair the damaged equipment and phone lines. The City's goal is to re-establish all telemetry and control functions to essential City facilities before the end of 2011.

Level Recorder at Crestview Estates Reservoir

WATER SYSTEM OPERATION

Overview

All water supply is provided through two metered connections from SPU's Tolt Pipeline No. 1 that follows an alignment directly south of the City, as shown in **Figure 2-1**. Tolt 1 Supply Station provides water to the 615 Zone and indirectly fills the 0.5 MG Crestview Estates Reservoir in the 555 Zone through an altitude control valve at the reservoir site. Water from this supply station can also indirectly fill the 450 Zone 2.2 MG Big Rock Road Reservoir through an altitude control valve at the reservoir site. Tolt 2 Supply Station provides water directly to the 450 Zone and the Big Rock Road Reservoir. The settings of the supply facilities and water usage throughout the system dictate the amount of water either flowing into or out of the reservoirs. The 615 Zone Booster Pump Station draws water from the 450 Zone Big Rock Road Reservoir and pumps it into the closed 615 Zone (i.e., no storage within the zone) to meet 615 Zone demands and to supply water to the 0.5 MG Crestview Estates Reservoir when the altitude valve opens for filling the reservoir. The 485 Zone and the 330 Zone are supplied by pressure reducing stations with water that originates from the 555 and 450 Zones, respectively.

The City's supply facilities have been designed to operate under a wide variation of supply heads and to comply with SPU's demand metering requirements. The following two sections describe the operation of the City's facilities during the demand metering period.

SPU Demand Metering Requirements

The SPU water supply contract requires the City to maintain a relatively constant 24-hour demand on the Seattle supply system by supplying peak demands from storage, or pay a substantial demand surcharge. The demand surcharge is imposed when the average of the demand factors from the 10 maximum supply days during the demand metering period exceeds

1.3. The current demand metering period is from May 16th through September 15th of each year.

The demand factor is calculated from the ratio of the 15-minute peak flow rate to the 24-hour average flow rate of the same day. The City's two supply facilities are considered as a single supply connection for the purpose of calculating the demand factor. The demand surcharge is calculated in the fall of each year based upon the supply rates during the demand metering period. The demand surcharge, if imposed, is applied for one year beginning in January following the summer that the peak demands occurred. To avoid the demand surcharge, the City operations personnel operate the supply facilities in a flow control mode during the summer months and adjust the flow rate of each station on a daily basis to maintain maximum storage levels and a relatively constant supply from SPU. The rate of supply is set early in the morning each day based on the prior days demand, the prior days flow control valve settings, the level in the reservoirs, and the forecasted weather condition for the upcoming day.

When demand metering is not in effect during the lower water usage months of the year, the supply facilities are usually set to maximize water turnover and maintain adequate water quality in the reservoirs.

Seattle Supply Head Variation

The hydraulic head, or pressure, of the water entering the City's supply facilities from the Tolt pipeline varies throughout the year, based on the overall water demand of users of the SPU regional system. The hydraulic head at the City's supply facilities is highest during the winter and lowest during the summer, especially during periods of extreme temperatures and high water use throughout the region. The SPU water supply contract identifies the minimum hydraulic head of water supply that SPU must maintain at each of the City's supply facilities, which is 645 feet at Tolt 1 Supply Station and 640 feet at Tolt 2 Supply Station, based on the NAVD88 datum. The City's supply facilities are capable of providing adequate pressures and flows throughout the system, even if the SPU supply system is operated at minimum contract head levels.

ADJACENT WATER SYSTEMS

The area outside and immediately adjacent to Duvall's existing water service area is unincorporated King County and only a portion of the area immediately adjacent to the City is served by a public water system. Two large water systems are located in close proximity to the City's system, as shown in **Figure 2-3**. In addition, one of SPU's main supply lines, Tolt Pipeline No. 1, is located within the City's service area boundary. The following provides a brief description of each water system.

King County Water District No. 119

King County Water District No. 119 is immediately adjacent to the east and south sides of the City's water service area. The District has approximately 1,199 service connections and provides water to a population of approximately 3,000 people within unincorporated King County. The District also purchases its water supply from SPU. The City has no plans for an

intertie between the two systems at this time. Five single family customers located within the District's service area are currently served by the City under the terms of a 1998 interlocal agreement between the City and the District, which was most recently amended in 2007. These customers are located southeast of the City's current retail service area in the vicinity of the Tolt 1 Supply Station. A copy of the agreement and its amendment is contained in **Appendix A**.

Woodinville Water District

Woodinville Water District is located approximately one mile west of the City's water system and is bordered by several other water systems, which include Northshore Utility District, City of Bothell, City of Kirkland, and the City of Redmond. The District is a combined water and sewer district which serves approximately 13,700 water customers and 2,500 sewer customers within the City of Woodinville, a portion of the City of Bothell and unincorporated King County. The system serves a population of approximately 42,300 people. Similar to the City of Duvall, the District receives all of its water supply from SPU. There are no plans for interties between this system and the Duvall water system at this time.

H:\EVT Projects\10\1167\Figures\ArcGIS File for Figures\FIGURE 2 1 mxd 9/7/2011 2:07:40 PM DKH

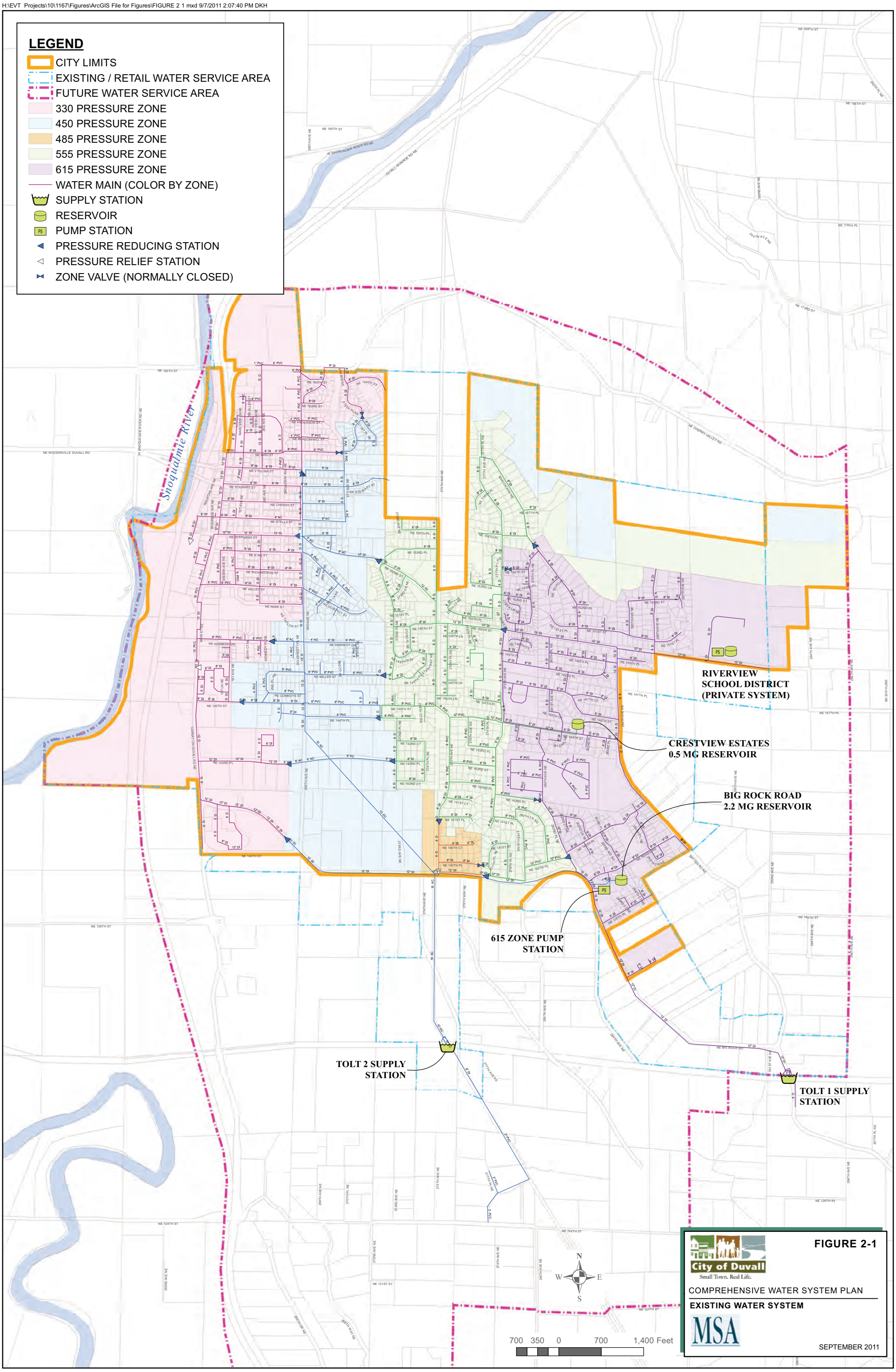

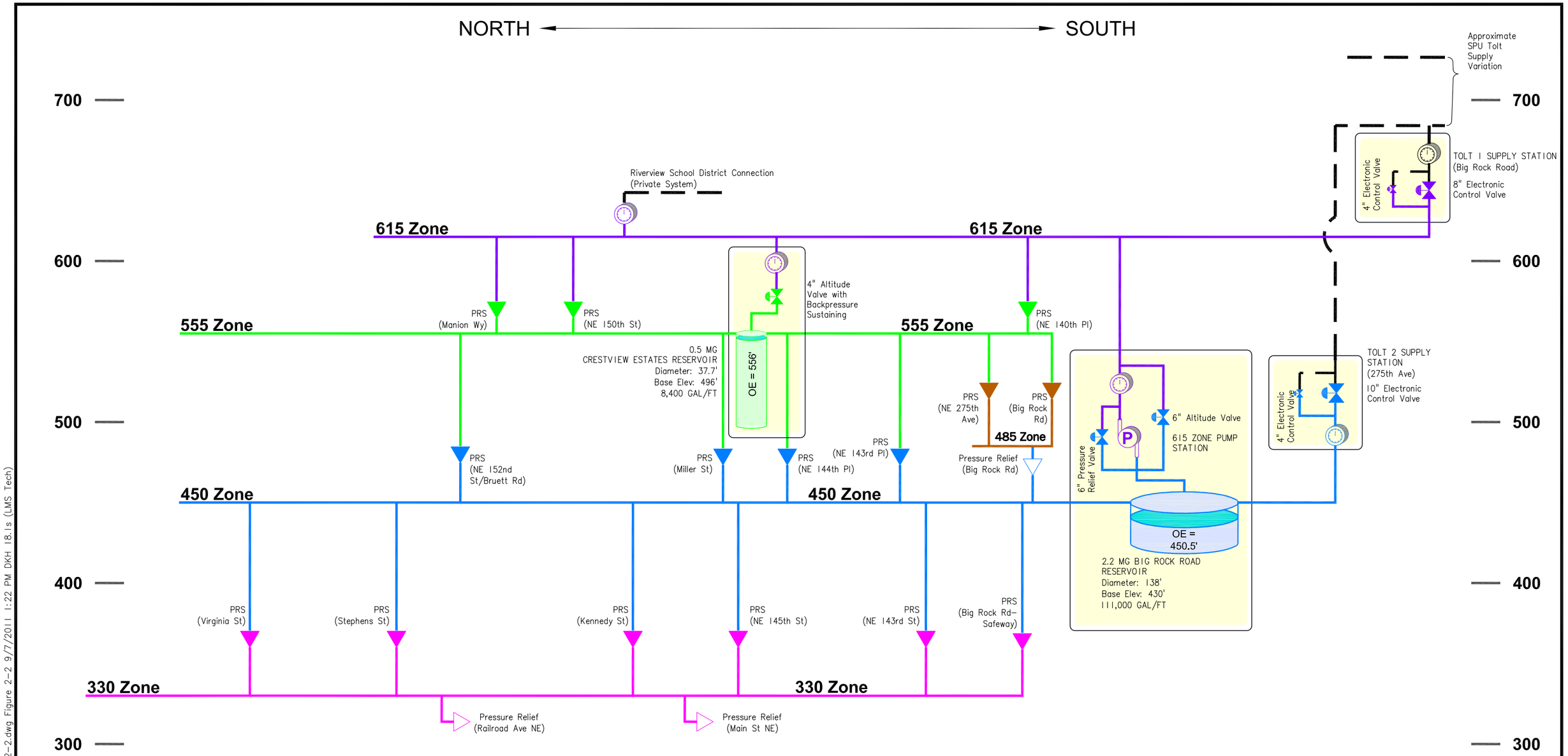

LEGEND

- 615 ZONE
- 555 ZONE
- 485 ZONE
- 450 ZONE
- 330 ZONE
- ADJACENT SYSTEM
- FACILITIES AT SAME SITE
- PUMP STATION
- PRESSURE REDUCING STATION/VALVE
- CONTROL VALVE
- METER
- PRESSURE RELIEF STATION/VALVE

ABBREVIATIONS

ELEV	ELEVATION
FT	FEET
GAL	GALLONS
MG	MILLION GALLONS
OE	OVERFLOW ELEVATION

Figure 2-2

City of Duvall
Small Town. Real Life.

COMPREHENSIVE WATER SYSTEM PLAN

EXISTING WATER SYSTEM HYDRAULIC PROFILE

MSA

September 2011

H:\EVT_Projects\10\1167\CAD\10-1167-408-WA-FIG 2-2.dwg Figure 2-2 9/7/2011 1:22 PM DKH 18.1s (LMS Tech)

H:\EVT_Projects\10\1167\Figures\ArcGIS File for Figures\FIGURE 2-3.mxd 9/7/2011 2:21:09 PM DKH

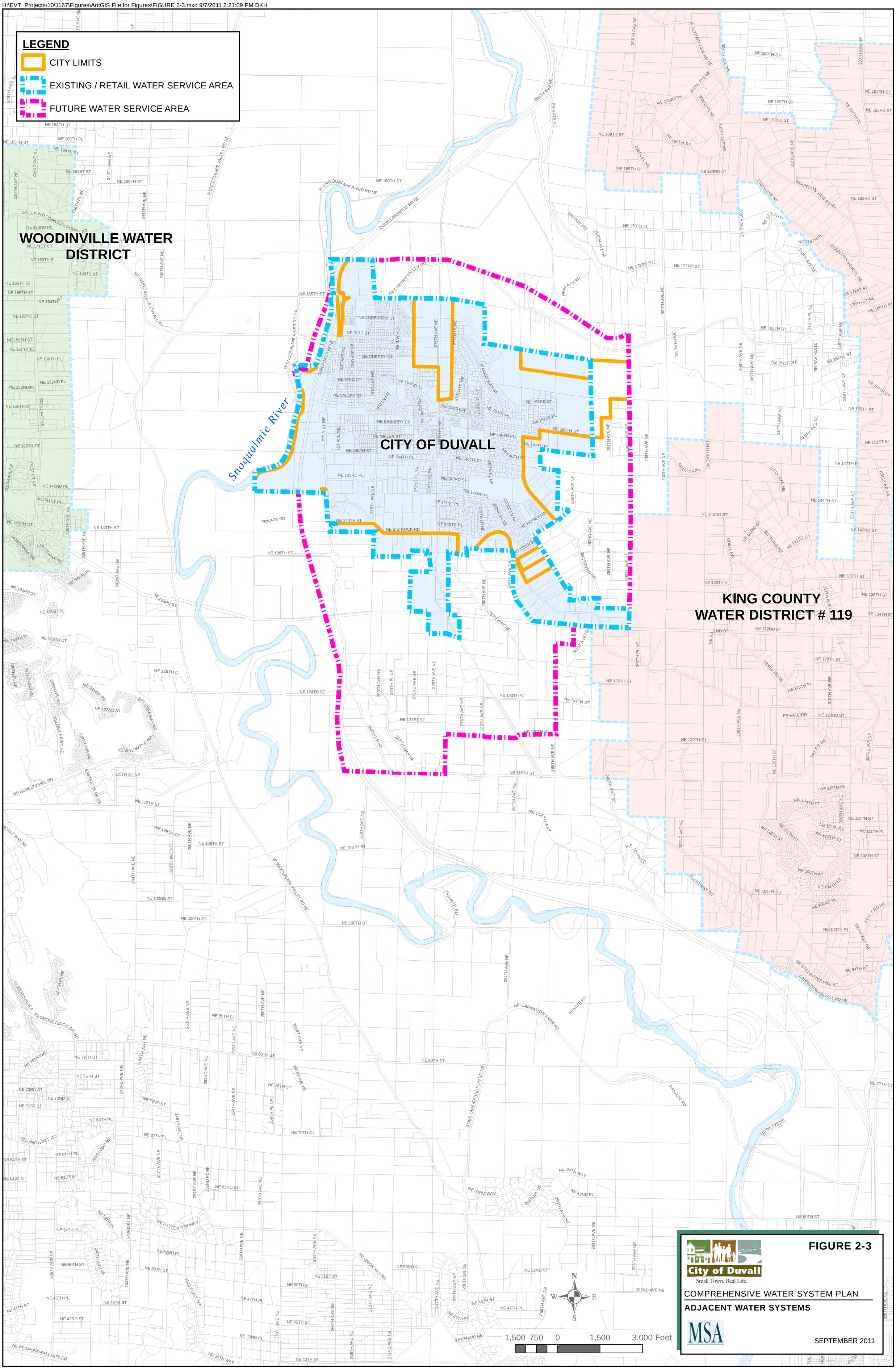

3

Land Use and Population

INTRODUCTION

This chapter demonstrates the compatibility of this water system plan with the City of Duvall Comprehensive Plan and other plans, identifies current land use designations, and presents population data. The City of Duvall Overall Comprehensive Plan was completed in December 2006 and was last updated in October 2010. The plan was developed to meet the requirements of the State of Washington Growth Management Act (GMA). The GMA requires, among other things, consistency between land use and utility plans and their implementation.

COMPATIBILITY WITH OTHER PLANS

Introduction

The following planning documents were examined to ensure the Comprehensive Water System Plan is consistent with the City's land use policies and other related plans.

- Growth Management Act
- City of Duvall Comprehensive Plan
- King County Countywide Planning Policies
- East King County Coordinated Water System Plan

Growth Management Act

The State of Washington Growth Management Act, which was passed in1990 and amended in years to follow, defined four goals relevant to water system planning:

1. Focus growth in urban areas and reduce sprawl;
2. Consistency between land use and utility plans;
3. Ensure adequate public facilities and services, concurrent with growth;
4. Designate and protect critical areas.

Urban Growth Area

The GMA requires that King County and Duvall cooperate in designating an Urban Growth Area (UGA). As part of the development of its 2006 Comprehensive Plan, the City designated an UGA that would accommodate the City's projected population growth and provide resource conservation.

Consistency

The plans and policies of the City of Duvall and King County must be consistent in accordance with GMA, per RCW 36.70A.100. The GMA also requires consistency with the implementation of water system plans and comprehensive plans, per RCW 36.70A.120.

The Municipal Water Law, which became effective in 2003, also requires consistency of water system plans with local plans and regulations. Confirmation of consistency under this law is achieved by means of completing the Consistency Statement Checklist, which must be included with all water system plans. A signed copy of this checklist is included in **Appendix E**.

Concurrency

Concurrency means that adequate public facilities and services are provided at the time growth occurs. For example, growth should not occur where schools, roads and other public facilities are overloaded. Concurrency ensures that public dollars are used efficiently and that quality of life is preserved. To achieve this objective, the GMA directs growth to areas already served or readily served by public facilities and services (RCW 36.70A.10). It also requires that, when public facilities and services cannot be maintained at an acceptable level of service, the new development should be prohibited (RCW 36.70A.100).

Critical Areas

The GMA requires that critical areas be designated and protected. Critical areas include aquifer recharge areas, wetlands and steep slopes. **Appendix F** contains a SEPA checklist that was prepared for this Comprehensive Water System Plan that addresses environmental issues.

City of Duvall Comprehensive Plan

The Land Use Element of the City of Duvall's 2006 Comprehensive Plan is the City's vision of how growth and development should occur over a 20-year horizon and includes goals and policies to achieve this vision. The Future Land Use Map, which is included as **Figure 3-1**, shows the different types of uses that are appropriate throughout the City.

The Land Use Element articulates many of the same goals and concerns of the GMA. Like the GMA, the Land Use Element seeks to accommodate growth while maintaining the City's residential but rural character and protecting the environmentally sensitive areas. It seeks to promote a strong local economy and vital commercial and industrial districts by focusing economic development within them and establishing development guidelines. The Utilities and Capital Facilities Elements ensure that new development will be adequately serviced without compromising existing levels of service, similar to principal of concurrency as defined in the GMA.

The City encompasses an area of approximately 1,590 acres (2.5 square miles). Some undeveloped lots still exist within the City's business district, or Old Town, and infilling is expected and encouraged in these areas. Because vacant land is limited, the City must annex and broaden its boundaries to accommodate the growth mandated by the GMA. The Duvall UGA consists of approximately 2,050 acres (3.2 square miles).

King County Countywide Planning Policies

The King County Council adopted the King County Countywide Planning Policies (CPPs) in July 1992. Since this time, the plan has been amended several times with the last amendment occurring late May 2010. The CPPs serve as the framework for the County's and cities' own comprehensive plans, including the City of Duvall Comprehensive Plan. Consistent with the GMA's goals, it establishes an UGA within the County to encourage growth in urban areas and to reduce urban sprawl. The CPPs also guide development in rural, unincorporated King County. Similar to the City's Comprehensive Plan, the County's policy goals seek to reduce urban sprawl, protect rural areas, provide affordable housing throughout the County, and coordinate protection of environmentally sensitive areas.

The Growth Management Planning Council (GMPC) is in the process of updating the CPPs. The intent of the update process is threefold: 1) to ensure consistency with current state law, state agency guidance and recent hearings board decisions; 2) to align the CPPs with the newly adopted regional growth strategy found in VISION 2040; and 3) to modernize the CPP narrative to reflect the ongoing and evolving implementation of the Growth Management Act and countywide policies. GMPC anticipates action on the amended CPPs in summer 2011.

East King County Coordinated Water System Plan

The East King County Coordinated Water System Plan (CWSP) was prepared in 1989 and updated in 1996. The CWSP was prepared under the direction of the King County Council and the East King County Regional Water Association (RWA). The RWA is a group of water purveyors that provide service within the Critical Water Supply Service Area (CWSSA) that was designated by the King County Council on December 15, 1985 for purposes of the CWSP. Most of the water purveyors within the RWA obtain their water supply from Seattle Public Utilities (SPU).

The purpose of the CWSP is to assist the area's water utilities in establishing an effective process for planning and development of public water systems and restricting the proliferation of small public water systems. The plan accomplishes this by establishing service area boundaries; minimum design standards; service review procedures; appeals procedures, long-term regional water supply strategy; water conservation program and goals; and the satellite system management program. The City has established policies, design criteria and goals that meet or exceed the requirements and goals of the CWSP.

LAND USE

The city limits currently encompass an area of approximately 1,590 acres. The City's UGA encompasses an additional 640 acres outside of the current city limits. This UGA includes an approximately 330 acre urban reserve area just east of the city limits. The future water service area is significantly larger than the City's UGA with 4,270 total acres. The City's land use designations, as shown in the Future Land Use Map on **Figure 3-1**, guide development in Duvall. Land use outside of the city limits is designated by King County.

The area served by the City is primarily residential, comprised largely of single-family residents. Within the current city limits, approximately 44 percent of the land area is currently designated

for residential use; 13 percent is designated for mixed commercial, industrial, and residential use; 30 percent is designated for public facilities including sensitive areas and open space; and 13 percent is right-of-way or other public lands. Multi-family residential, commercial and industrial development is concentrated along the major traffic corridor of SR 203, or Main Street, through the area known as Old Town. The upland plateau at the east side of the City is designated solely for single family residential and public facility use, as shown on **Figure 3-1**.

POPULATION

Household Trends

Duvall is primarily a residential community comprised largely of single-family residences with most of the population commuting to nearby suburban cities for employment. There were approximately 2,350 residential units within Duvall in 2010. Of the 2010 residential units, approximately 85 percent of these residences were single family, whereas 5 percent were multi-family and 10 percent were mobile homes. Since 1980, Duvall has experienced a slow trend towards providing an increasing number of multi-family housing units and it is expected that this trend will continue.

Duvall had a population of approximately 6,695 in 2010, which equates to a calculated average of 2.85 residents per household based on City generated data. The average household size in all of King County in 2010 was 2.27 residents per household, based on Office of Financial Management (OFM) data as reported April 1, 2011. The higher average household size in Duvall reflects the higher percentage of single-family home base of the Duvall community. The Duvall OFM data from 1990 to 2000 shows a trend of decreasing residents per household from 2.93 to 2.88. This trend in decreasing residents per household is continuing as the new data presented above suggests, which reflects Duvall's gradual shift from a rural service center to a suburban city.

Existing and Future Population

Duvall has been experiencing rapid population growth since the late 1970's. Prior to this, the City's population fluctuated only slightly as the small farming and lumber community's population remained under 1,000 people for nearly a century. King County has also experienced rapid population growth since 1990, but at a slower pace than Duvall. The population of King County increased approximately 28 percent from 1990 to 2010, whereas Duvall's population increased approximately 142 percent during this same period. **Table 3-1** illustrates Duvall's historical population growth since 1990. The table also shows projected future populations in 2016 and 2030.

The historical population data shown in the table represents the population within the established city limits for each year, whereas projected population data for year 2016 is based on growth estimates within the city limits and UGA. For year 2030, population projections are shown for two scenarios: 1) population within the city limits, UGA and UGAR (Urban Growth Area Reserve) and 2) maximum population for complete build-out within the city limits, UGA, and UGAR. These population estimates are in general accordance with the City's 2008 population forecast model summarized in the "Housing and TAZ Capacity Analysis Study" (City of Duvall), November 25, 2008.

These population projections, along with the historical per capita water use data presented in **Chapter 4**, form the basis for determining the future water demands of the City's water system.

Table 3-1
Historical Population and Future Projections

Year	Population
Historical[1]	
1990	2,770
1991	3,012
1992	3,109
1993	3,178
1994	3,247
1995	3,422
1996	3,599
1997	3,813
1998	4,051
1999	4,328
2000	4,616
2001	4,860
2002	5,190
2003	5,460
2004	5,545
2005	5,595
2006	5,735
2007	5,845
2008	5,925
2009	6,646
2010	6,695
Projected	
2016 (+6 years)[2]	7,609
2030 (+20 years)[2]	11,386
2030 (+20 years max)[3]	14,777

1 = Population within city limits
2 = Population within city limits and UGA
3 = Population within city limits and UGA, including urban reserve area

Figure 3-1
Future Land Use Map

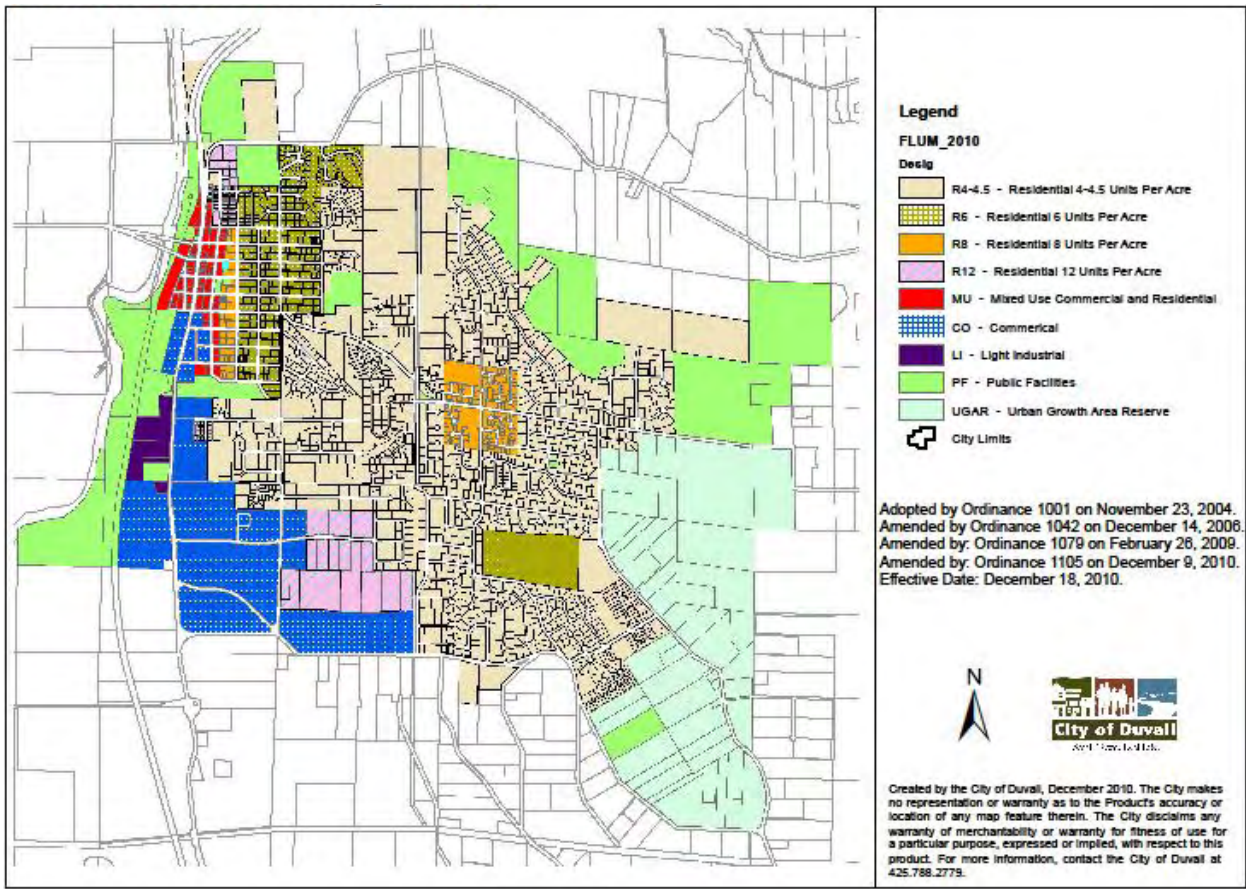

4

Water Demands

INTRODUCTION

This chapter summarizes past water demands and future projected water demands of the system. These demands are used in **Chapter 8** to analyze the existing water system facilities and form the basis for sizing future water system improvements in **Chapter 9**. The following types of demands were analyzed: average day demand, peak day demand, peak hour demand, fire flow demand, and future projected demands with and without estimated reductions from water conservation efforts. This chapter also summarizes the City's water demand data collection and reporting procedures.

CURRENT POPULATION AND SERVICE CONNECTIONS

The area served by the City of Duvall is primarily residential, comprised largely of single family residences, as described in **Chapter 3**. In 2009, approximately 42 percent of the land area within the city limits was utilized for single family residential and multi-family residential use, 13 percent was utilized for commercial/industrial/mixed-use (commercial and residential), and 32 percent was utilized for public facilities/ parks/open space, and 15 percent was utilized as public right-of-way. The total population of the City in 2009 was approximately 6,646, as shown in **Chapter 3**. Water was provided to an average of 2,254 metered water service connections in 2009. The demand analysis that follows summarizes past water use of the City's water customers.

EXISTING WATER DEMANDS

Factors Affecting Water Demands

For any public water system, the total demand of all customers will vary throughout the day and over the course of the year. The following factors have the greatest impact on water demand levels in a public water system: 1) population, 2) weather, and 3) type of customer. Population and weather have the largest impact on water system demands. As population increases, overall demand will also increase for the year. Weather has more of a short-term impact on demands, which tends to increase as outdoor temperatures increase and outdoor water use increases. Water demand varies among different types of water customers. Single family residential customers typically use more water than multi-family residential customers, primarily due to outdoor lawn watering of single family residences. Water demands are also affected by conservation efforts that can reduce demands.

Water Consumption

Water consumption is the amount of water that customers use as measured by their water meters. The City has categorized all water customers into twelve different classes for billing purposes.

For planning purposes, the water customers have been combined into four groups: single family residential, multi-family residential, commercial and industrial, and government and education. **Table 4-1** summarizes past water consumption data of each customer class within the City from 2004 through 2009.

Table 4-1
Average Annual Metered Consumption and Service Connections

Year	Customer Class				Totals
	Single Family	Multi-Family	Commercial/ Industrial	Government/ Education	
Average Number of Connections					
2004	1,965	38	85	17	2,105
2005	2,006	38	87	21	2,152
2006	2,055	38	86	23	2,202
2007	2,065	39	89	22	2,214
2008	2,075	39	92	20	2,226
2009	2,111	40	80	23	2,254
Average Annual Consumption (gallons)					
2004	134,894,320	6,540,512	16,467,220	5,333,988	163,236,040
2005	121,914,276	7,865,968	17,402,220	6,412,604	153,595,068
2006	136,380,596	8,060,448	16,835,236	6,016,164	167,292,444
2007	124,427,792	7,176,486	29,413,246	3,464,649	164,482,174
2008	128,584,192	8,454,644	17,423,912	7,503,188	161,965,936
2009	143,197,868	8,966,276	10,907,336	8,738,884	171,810,364
Average Daily Consumption Per Connection (gal/day/conn)					
2004	188	472	531	860	
2005	167	567	548	837	
2006	182	581	536	717	
2007	165	511	905	441	
2008	170	594	519	1,028	
2009	186	614	374	1,041	
Average[1] (2004-2009)	178	566	502	896	

Note: 1. Averages shown exclude data from 2007, the year of a billing system upgrade and possible data loss.

As shown in **Table 4-1**, most of the water consumption is from single family residential customers. Although more than 93 percent of the City's customers are single family residential, as shown in **Chart 4-1**, they only use approximately 83 percent of the total water consumed, as shown in **Chart 4-2**. This is due to the lower amount of usage per single family resident as compared to other types of customers.

Chart 4-1
2009 Water Connections by Customer Class

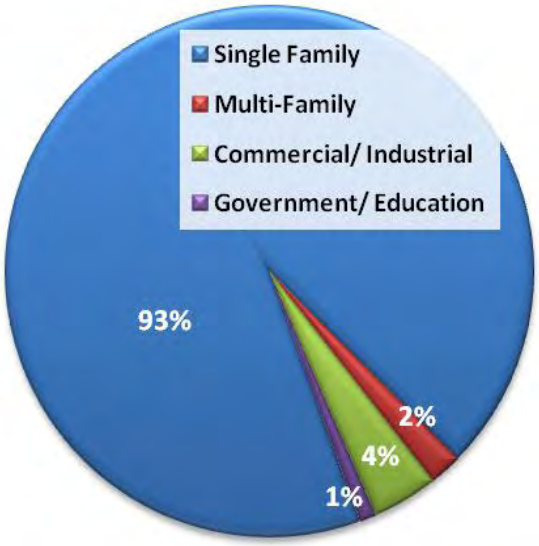

Chart 4-2
2009 Water Consumption by Customer Class

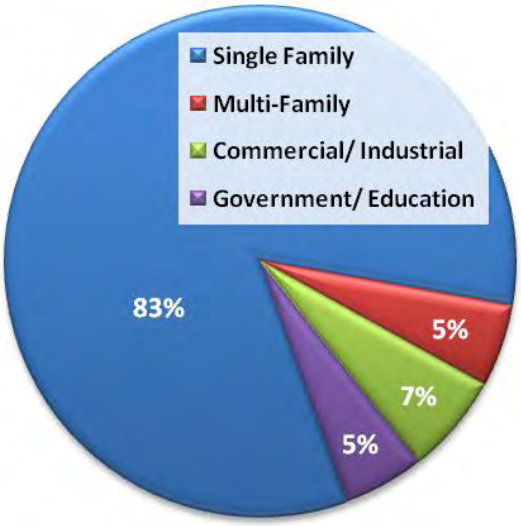

The average computation does not include data in 2007, which is a year that the billing system was upgraded and data is considered to be somewhat inaccurate.

Table 4-2 shows the top 20 water customers that used the most water in 2009. The total water consumption of these customers represents approximately 11 percent of the total consumption in 2009. The table consists mostly of City facilities, businesses, school, multi-family complexes, and irrigation.

Table 4-2
2009 Largest Water Users

Name	Address	Water Use Type	Annual Consumption (gals)
City of Duvall	14525 Main St NE	Domestic	2,518,684
City of Duvall	Big Rock Ball Fields	Domestic	2,174,581
Safeway Inc.	14020 Carnation-Duvuall Rd NE	Domestic	1,535,747
Depot Village Mobile Home Park	26220 NE Stella St	Domestic	1,131,800
Compass Management	Irrigation-Copperhill Square	Irrigation	1,028,569
Safeway Inc.	Safeway Irrigation	Irrigation	985,182
Pacific Ridge Homes	Fox Hollow Irrigation	Irrigation	971,717
Riverview School District	29000 NE 150 St	Domestic	967,977
Compass Management	Copperhill Square LWR Irrigatior	Irrigation	898,408
Ixtapa Restaurant	15329 Brown Ave NE	Domestic	858,013
Clippership Enterprises LLC	15820 Main St NE	Domestic	815,375
Pacific Ridge Homes	Fox Hollow Irrigation - Tract 993	Irrigation	698,679
Larry Pentz	14823 Main St NE	Domestic	678,481
River View Plaza	15321 Main St NE	Domestic	659,032
Pickering Water Line	28014 NE 124th St	Domestic	628,362
Richardson St LLC	26521 NE Richardson St	Domestic	565,526
Legacy Ridge HOA	Landscape Entrance	Irrigation	541,588
Taylor's Ridge HOA	Taylors Ridge Sprinkler	Irrigation	484,736
Country Crossing	26525 NE Cherry Valley Rd	Domestic	473,516
H.K. Clay	Skyline Height Irrigation	Irrigation	464,539
Largest Water Users Total			19,080,511
2009 Water System Total			171,810,364
Percent of Total			11%

Water Supply

Water supply is the total amount of water delivered to the City's water system, as measured through the meters at both of the City's supply facilities. Water supply is different than water consumption in that water supply is the amount of water delivered into the system and water consumption is the amount of water taken out of the system. For any given year, the amount of water supply will be greater than the amount of water consumption, due to water system leaks and non-metered water uses, which will be further described in the next section. For the City of Duvall, water supply represents water that is purchased from the Seattle Public Utilities (SPU) and delivered through the City's supply stations. **Table 4-3** summarizes the total amount of water that was supplied to the City's system from 1995 through 2009, the average population within the City's retail water service area, the average day demand of the system, and the computed per capita demand for each year.

Table 4-3
Historical Supply and Per Capita Demands

Year	Average Population	Annual Supply (gallons)	Average Day Demand (gpm)	Average Demand Per Capita (gal/day/capita)
1995	3,422	124,144,064	236	99
1996	3,599	125,081,308	238	95
1997	3,813	130,025,588	247	93
1998	4,051	145,696,188	277	99
1999	4,328	144,931,732	276	92
2000	4,616	158,029,960	301	94
2001	4,860	126,222,008	240	71
2002	5,190	151,798,372	289	80
2003	5,460	192,718,460	367	97
2004	5,545	182,752,108	348	90
2005	5,595	177,177,264	337	87
2006	5,735	181,652,548	346	87
2007	5,845	172,677,296	329	81
2008	5,925	166,575,860	317	77
2009	6,646	189,633,708	361	78
Average (2004-2009)				83

As shown in the table, average demand per capita fluctuates from year to year, but an overall trend shows per capita water demand has been decreasing since 1995, which is most likely the result of water conservation efforts. The City's average per capita demand of 83 gallons per day from 2004 to 2009 will be used later in this chapter to forecast water demands in future years, based on future population projections in **Chapter 3**.

Table 4-4 shows the average demand of each of the City's five pressure zones, based on 2009 water demand data. Most of the City's water, almost two-thirds, is used within the upper pressure zones (555 Zone and 615 Zone) where single family residential is the primary use.

Table 4-5 shows the total annual amount of supply from each of the City's supply stations from 1999 to 2009. The Tolt 1 Supply Station has historically provided most of the water supply to the system, as shown in the table.

Table 4-4
2009 Demands by Pressure Zone

Pressure Zone	2009 Annual Supply (gallons)	Average Day Demand (gpm)	Average Day Demand (MGD)	Percent of Total Demand (%)
615	70,392,904	134	0.19	37.1%
555	55,920,823	106	0.15	29.5%
485	1,957,414	4	0.01	1.0%
450	24,269,240	46	0.07	12.8%
330	37,066,421	71	0.10	19.6%
Total	189,633,708	361	0.52	100%

Table 4-5
Demands by Supply Facility

Year	Total Supply from Each Facility		Total (gals / % total)
	Tolt 1 Supply Station (gals / % total)	Tolt 2 Supply Station (gals / % total)	
1999	112,649,548	32,282,184	144,931,732
	77.7%	22.3%	100%
2000	157,670,172	359,788	158,029,960
	99.8%	0.2%	100%
2001	102,086,292	24,135,716	126,222,008
	80.9%	19.1%	100%
2002	115,753,748	36,044,624	151,798,372
	76.3%	23.7%	100%
2003	104,701,300	88,017,160	192,718,460
	54.3%	45.7%	100%
2004	162,975,736	19,776,372	182,752,108
	89.2%	10.8%	100%
2005	171,745,288	5,431,976	177,177,264
	96.9%	3.1%	100%
2006	180,971,868	680,680	181,652,548
	99.6%	0.4%	100%
2007	121,389,180	51,288,116	172,677,296
	70.3%	29.7%	100.0%
2008	101,613,556	64,962,304	166,575,860
	61.0%	39.0%	100%
2009	174,319,904	15,313,804	189,633,708
	91.9%	8.1%	100%
Total (1999-2009)	1,505,876,592	338,292,724	1,844,169,316
Percent of Total	81.7%	18.3%	100%

Authorized Consumption and Distribution System Leakage

Authorized consumption is the amount of water authorized for use, which includes water customers usage and other authorized uses such as water main flushing, street cleaning, and permitted hydrant use. All unauthorized uses and any water that cannot be accounted for is considered distribution system leakage. In other words, distribution system leakage is an unrecorded volume of water that may include water system leaks, inaccurate supply metering, inaccurate customer metering, unknown fire hydrant usage, illegal water service connections, and unknown reservoir overflows.

The Water Use Efficiency Rule, which became effective in January 2007, established a distribution leakage standard that all public water systems were required to meet by July 1, 2010. Starting with data collected in 2007, distribution leakage must not be more than 10 percent of supply, based on a 3-year rolling average. If the City is not able to meet this requirement in the future, a water loss control action plan must be prepared and implemented. This plan will need to identify steps and timelines for reducing leakage.

The difference between the amount of water supplied to the City and the amount of metered water consumption from 2004 through 2009 is shown in **Table 4-6**. The 3-year rolling average of distribution system leakage is 5.6 percent, which is less than 10 percent of total supply even without accounting for authorized use amounts since this information is not available for all years. This shows the City does not need to implement a water loss control action plan. The estimated amount of distribution system leakage in the City's system in 2009 is shown in **Table 4-7**, which includes an estimate of authorized use compiled from City maintenance records. The City will continue to collect data, monitor all uses of water, and report annually the amount of distribution system leakage.

Table 4-6
Metered Supply and Consumption Comparison

Year	Total Supply (gallons)	Total Consumption (gallons)	Net Difference (gallons)	Net Difference as % of Total Supply
2004	182,752,108	163,236,040	19,516,068	10.7%
2005	177,177,264	153,595,068	23,582,196	13.3%
2006	181,652,548	167,292,444	14,360,104	7.9%
2007	172,677,296	164,482,174	8,195,122	4.7%
2008	166,575,860	161,965,936	4,609,924	2.8%
2009	189,633,708	171,810,364	17,823,344	9.4%
3-Year Rolling Average (2007-2009)				5.6%

Table 4-7
2009 Estimated Distribution System Leakage

Description	Total Amount (gallons)
A. Total Purchased Supply	189,633,708
B. Total Metered Consumption	171,810,364
C. Estimated Authorized Uses (flushing, street cleaning, permitted hydrant use)	2,367,000
Distribution System Leakage (A-(B+C))[1]	15,456,344
Distribution System Leakage as % of Total Purchased Supply	8.2%

1. Amount shown for distribution system leakage may be from water main and water service leaks, meter inaccuracies, meter reading & recording error, illegal water use, and other uses not identified above.

Equivalent Residential Units

The demand of each customer class can be expressed in terms of equivalent residential units (ERU's) for demand forecasting and planning purposes. One ERU is equivalent to the amount of water used by a single family residence. The number of ERU's represented by the demand of the other customer classes is determined from the total demand of the customer class and the demand per single family residential ERU.

Table 4-8 shows the number of ERU's calculated for each customer class from 2004 through 2009. The demands shown are based on supply data that was computed from the consumption of each customer class and the difference between total metered supply and consumption from each year. Therefore, the values shown in **Table 4-8** differ from those in **Table 4-1** because they include a proportional share of unaccounted-for water within the water system.

The average demand per ERU from 2004 through 2009 was 196 gallons per day. This is below the City's previous average demand per ERU of 228 gallons per day from 1995 through 2002, indicating positive results from the City's water conservation efforts. The City's average demand per ERU of 196 gallons per day is used later in this chapter to forecast ERU's in future years, based on estimated future demands.

Average Day Demand

Average Day Demand (ADD) is the total amount of water delivered to the system in a year divided by the number of days in the year. Average day demand is determined from historical water use of a system and is used to project future demands for the system. Average day demand data is used to determine standby storage requirements for water systems. Standby storage is the volume of a reservoir used to provide water supply under emergency conditions when supply facilities are out of service. Water supply records were used to determine the system's average day demand, which is shown in **Table 4-3**.

Table 4-8
Equivalent Residential Units (ERUs)

Year	Average Number of Connections	Average Annual Demand (gallons)	Average Day Demand per ERU (gal/day/ERU)	Total ERU's
Single Family Residential				
2004	1,965	151,021,927	211	1,965
2005	2,006	140,632,366	192	2,006
2006	2,055	148,087,279	197	2,055
2007	2,065	130,627,254	173	2,065
2008	2,075	132,243,995	175	2,075
2009	2,111	158,052,995	205	2,111
Average[1] (2004-2009)			196	
Multi-Family Residential				
2004	38	7,322,478	211	95
2005	38	9,073,668	192	129
2006	38	8,752,343	197	121
2007	39	7,534,045	173	119
2008	39	8,695,283	175	136
2009	40	9,896,424	205	132
Commercial / Industrial				
2004	85	18,435,997	211	240
2005	87	20,074,067	192	286
2006	86	18,280,345	197	254
2007	89	30,878,725	173	488
2008	92	17,919,837	175	281
2009	80	12,038,846	205	161
Government / Education				
2004	17	5,971,705	211	78
2005	21	7,397,162	192	106
2006	23	6,532,581	197	91
2007	22	3,637,271	173	57
2008	20	7,716,746	175	121
2009	23	9,645,442	205	129
System-Wide Totals				
2004	2,105	182,752,108	211	2,378
2005	2,152	177,177,264	192	2,527
2006	2,202	181,652,548	197	2,521
2007	2,214	172,677,296	173	2,730
2008	2,226	166,575,860	175	2,614
2009	2,254	189,633,708	205	2,533

Note: 1. Average demand per ERU excludes 2007 data.

Peak Day Demand

Peak Day Demand (PDD) is the maximum amount of water used throughout the system during a 24-hour time period of a given year. Peak day demand typically occurs on a hot summer day when outdoor water use for lawn watering and other purposes is occurring throughout much of the system. In accordance with WAC 246-290-230 - Distribution Systems, the distribution system shall provide fire flow at a minimum pressure of 20 psi during maximum day demand (i.e., peak day demand) conditions. Supply facilities (i.e., supply stations, pump stations, interties) are typically designed to supply water at a rate that is equal to or greater than the system's peak day demand.

Water supply records and reservoir telemetry reports are typically used to determine a system's peak day demand. However, complete telemetry records of supply and reservoir data were not available to compute the peak day demand of the system. Therefore, the peak day demand was estimated by applying a typical peak day demand/average day demand ratio of 2.20 to the system's actual average day demand amount. This results in an estimated peak day demand of 794 gpm (1.14 MGD) for 2009, as shown in **Table 4-9**.

Table 4-9
Peak Day Demands and Peaking Factors

Peak Day Demand Data		
Demand Type	**Date**	**Demand (gpm)**
Average Day Demand (ADD)	2009	361
Peak Day Demand (PDD)	Data unavailable Assumed PDD/ADD = 2.20	794
Peak Hour Demand (PHD)	Data unavailable Assumed PHD/PDD = 1.80	1,429

Peaking Factors	
Description	**Peaking Factor**
Peak Day Demand/Average Day Demand (PDD/ADD)	2.20
Peak Hour Demand/Peak Day Demand (PHD/PDD)	1.80
Peak Hour Demand/Average Day Demand (PHD/ADD)	3.96

Peak Hour Demand

Peak Hour Demand (PHD) is the maximum amount of water use, excluding fire flow, during a one hour time period of a given year. In accordance with WAC 246-290-230 - Distribution Systems, new public water systems or additions to existing systems shall be designed to provide domestic water at a minimum pressure of 30 psi during peak hour demand conditions. Water main sizing and analysis and equalizing storage are typically based on peak hour demand data.

The peak hour demand, like the peak day demand, is typically determined from the combined

flow of water into the system from all supply sources and reservoirs. Similar to the peak day demand, actual system data was not available to calculate the City's peak hour demand. Therefore, the system's peak hour demand was estimated based on a typical peak hour demand/peak day demand ratio of 1.80, resulting in a peak hour demand of 1,429 gpm for 2009.

The peaking factors shown in **Table 4-9** are used later in the chapter in conjunction with projected average day demands to project future peak day and peak hour demands of the system.

Fire Flow Demand

Fire Flow Demand is the amount of water required during fire fighting as defined by applicable codes. Fire flow requirements are established for individual buildings and expressed in terms of flow rate (gpm) and flow duration (hours). Fighting fires imposes the greatest demand on the water system because a high rate of water must be supplied over a short period of time, requiring each component of the system to be properly sized and configured to meet the most stringent demand placed on it.

General fire flow requirements were established for the different land use categories to provide a target level of service for planning and sizing future water facilities. The general fire flow requirement for each land use category within the City's service area is shown in **Table 4-10**. The water system analyses presented in **Chapter 8** are based on an evaluation of the water system providing sufficient fire flow in accordance with these general fire flow requirements.

Table 4-10
General Fire Flow Requirements

Land Use Category	Fire Flow Requirement (gpm)	Flow Duration (hours)
Low Density Residential	1,000	2
Medium Density Residential	1,750	2
High Density Residential	2,500	2
Commecial/Business Park	3,000	3
Light Industrial	3,500	3
Schools	3,500	3

FUTURE WATER DEMANDS

Method of Projecting Demands

Future demands were calculated from the projected population data from **Chapter 3** and the per capita demand data from **Table 4-3**. Future demand projections were computed for the average and maximum population projections, with and without a further reduction in water use from conservation. The recent average per capita demand of 83 gallons per day was used for all

demand projections without future water use reductions from water conservation. The future water demand projections with conservation are based on a reduced per capita demand that reflects the City's water use reduction goals, as shown in the City's Water Use Efficiency Program in Appendix G.

Future Water Demand Projections

Table 4-11 presents the estimated water demands of the system each year for the next six years and at the end of the 20-year planning period. The actual 2009 demand and the estimated 2010 demand are also shown in the table for comparison purposes.

Table 4-11
Future Water Demand Projections

Description	Historical[1]		Projected							
			Average[2]							Maximum[3]
	2009	2010	2011	2012	2013	2014	2015	2016 (+ 6 yrs)	2030 (+ 20 yrs)	2030 (+ 20 yrs)
Population Data										
Population in Water Service Area	6,646	6,695	6,847	7,000	7,152	7,304	7,457	7,609	11,386	14,777
Demand Basis Data (gal/day/capita)										
Demand without Conservation		83	83	83	83	83	83	83	83	83
Demand with Conservation			81	80	79	78	77	76	62	62
Average Day Demand (gpm)										
Demand without Conservation	361	386	395	403	412	421	430	439	656	852
Demand with Conservation			385	389	392	396	399	402	490	636
Peak Day Demand (gpm)										
Demand without Conservation	794	849	869	887	906	926	946	966	1,443	1,874
Demand with Conservation			847	856	862	871	878	884	1,078	1,399
Peak Hour Demand (gpm)										
Demand without Conservation	1,429	1,529	1,564	1,596	1,632	1,667	1,703	1,738	2,598	3,374
Demand with Conservation			1,525	1,540	1,552	1,568	1,580	1,592	1,940	2,519

1 = 2009 and 2010 Peak Day Demand and Peak Hour Demand values are based on actual or estimated average day demand amounts for the given year and typical peaking factors, and may not necessarily represent actual peak demands for these years.
2 = Average demand projections are based on growth within the City's UGA, excluding the urban reserve area.
3 = Maximum demand projections are based on growth within the City's UGA, including the urban reserve area.

The future average day demands were projected based on the estimated per capita demand values and population estimates for the given years. The 20-year projection is provided for both the average and maximum growth scenarios. The future peak day and peak hour demands were computed from the projected average day demands and the existing system peaking factors shown in **Table 4-9**. The future demand projections are also shown with and without estimated reductions in water use from achieving the conservation goals described earlier. The historical and projected water demand data from **Table 4-11** are also shown graphically in **Chart 4-3**.

Chart 4-3
Past and Future Water Demands

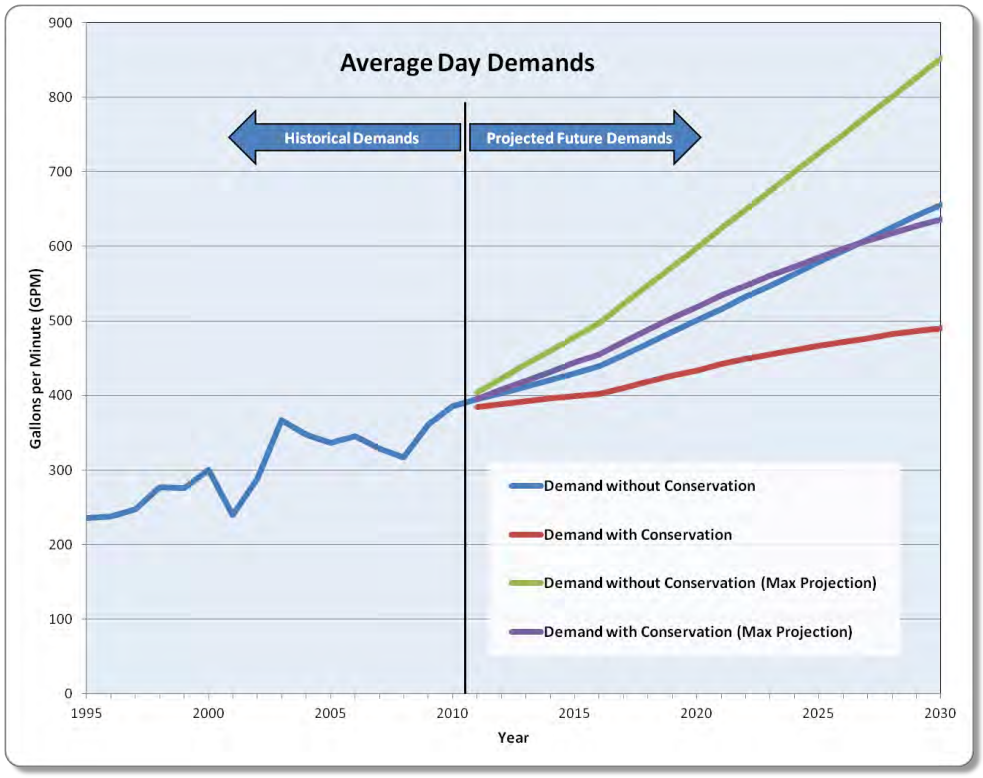

The 20-year projected demand data without conservation reductions for both growth scenarios was used for the evaluation of the planned improvements presented in **Chapter 9** to ensure that the future system will be sized properly to meet all requirements, whether or not additional water use reductions from conservation are achieved. However, the City will pursue further reductions in per capita water use by implementing the Water Use Efficiency Program elements.

Future ERU Projections

Table 4-12 presents the projected number of equivalent residential units (ERU's) of the system for 2016 and 2030. The 6-year and 20-year ERU forecasts are based on the projected water demands from **Table 4-11** and the average demand per ERU that was computed from recent demand data, as shown in **Table 4-8**.

Table 4-12
Future ERU Projections

Description	Average[1]		Maximum[2]
	2016 Projected (+ 6 yrs)	2030 Projected (+ 20 yrs)	2030 Projected (+ 20 yrs)
Demand Data (gpm)			
Avg Day Demand without Conservation	439	656	852
ERU Basis Data (gal/day/ERU)			
Demand per ERU without Conservation	196	196	196
Equivalent Residential Units (ERU's)			
Total System ERU's	3,200	4,800	6,300

1 = Average projections are based on growth within the City's UGA, excluding the urban reserve area.
2 = Maximum projections are based on growth within the City's UGA, including the urban reserve area.

WATER USE DATA COLLECTION

Requirements

In 1994, the Department of Ecology, Department of Health, and the Washington Water Utilities council published a document titled Conservation Planning Requirements to help water systems plan and use water more efficiently. A part of this document identifies the minimum data required to project future water demand and to provide a basis for evaluating the effectiveness of conservation programs. The water use data collection requirements vary, depending on the size of the water system.

With the recent implementation of the Water Use Efficiency Rule in January 2007, public water systems are now mandated to meet certain requirements for water use data collection, reporting, and the efficient use of water. The Water Use Efficiency Rule requires the collection and reporting of supply and consumption data on a regular basis and publishing the data in the annual water use efficiency performance report, in addition to the 6-year update of the water system plan.

Compliance

The water use data requirements for the City and the City's compliance status in meeting these requirements are presented below.

Source of Supply Meter Readings

Requirement: Read meters daily. Record monthly and annual totals.

Compliance Status: All water supply is purchased from SPU and delivered through the City's two supply stations, Tolt 1 Supply Station and Tolt 2 Supply Station. Each supply station has a SPU-owned meter that is connected to SPU's telemetry system and the City's telemetry system. Flows are recorded continuously on each telemetry system. In addition, the City tabulates monthly totals of water purchased and provides annual reports to SPU. Similarly, SPU provides monthly supply reports to the City, based on the recorded readings of the meters.

Peak Day/Peak Month

Requirement: Record each year's peak day and peak month totals.

Compliance Status: The City has been recording peak month demand data from the City's telemetry reports and water usage reports provided by SPU. Peak day demands are also calculated from the City's telemetry reports and SPU water usage reports, but the availability of this data has been limited in the past due to equipment issues for both the City and SPU. Recent equipment repairs and planned improvements to the City's telemetry system will enable the City to record peak demand data on a more regular basis in the future.

Non-Revenue Unaccounted-for Water

Requirement: Record annual totals.

Compliance Status: The City computes non-revenue unaccounted-for water from the annual supply, consumption, and non-revenue accounted-for water data. Distribution system leakage is computed annually and reported in the City's annual water quality report to customers.

Non-Revenue Accounted-for Water

Requirement: Record annual totals.

Compliance Status: Non-revenue accounted-for water is metered water that is used for construction projects, water main flushing, and for other purposes. The City recently started recording water for these types of uses and provides estimates of water use for activities that are difficult to meter.

Customer Service Meters

Requirement: a) Record monthly totals. Monthly totals may be estimated if water usage is billed less frequently; b) Record usage for the following classes: single family, multi-family, commercial, industrial, government, and agricultural. If different classes of users are used, include in water system plan, a timetable for when data will be collected for customer classes that is consistent with the above requirements.

Compliance Status: All customer service meters are currently read every month and the City has grouped all customers into several classes that meet the requirements stated above.

Population Served

Requirement: Record annually the estimated number of customers and connections served in the residential classes and the number of connections served in each of the other classes.

Compliance Status: The City has been recording the total number of connections in each customer class and population estimates as part of the annual reporting required by SPU.

Economic Data

Requirement: Record existing water rates for each customer class.

Compliance Status: The City has established water rates for each customer class. The existing water rates information is contained in the financial chapter of this plan.

Conservation Data

Requirement: Record annually the type of measure, the level of implementation, the duration of the measure, and the date at which they began.

Compliance Status: The City's involvement in water conservation is documented in the Water Use Efficiency Program, which is included in **Appendix G**.

WATER AVAILABILITY REVIEW

In accordance with the requirements of the Growth Management Act (GMA), a building permit cannot be issued until water is available. The requirement for providing evidence of an adequate water supply was codified in 1990 under Title 19.27.097 of the Revised Code of Washington (RCW) in the Building Code Section. The City completes a water availability review during the permitting phase for each proposed project that requires water service. The water availability review is documented as part of the Notice of Decision for land use projects or as part of the City of Duvall Water Service Application for residential or other projects.

5

Policies and Design Criteria

INTRODUCTION

The City of Duvall (City) operates and plans water service for City residents according to the design criteria, laws, and policies that originate from the following sources, listed in descending order from those with the broadest authority to the narrowest authority.

Federal Regulations

- U.S. Department of Health & Human Services
- U.S. Environmental Protection Agency

State Regulations

- Washington State Department of Health
- Washington State Department of Ecology

County Regulations

- King County Council

City Regulations and Policies

- Duvall City Council

Design Criteria

- American Water Works Association

These laws, design criteria, and policies guide the City's operation and maintenance of the water system on a daily basis and in planning for growth and improvements. Their overall objective is to ensure the City provides high quality water service at a minimum cost to its customers. They also set the standards that the City must meet to ensure the water supply is adequate to meet existing and future water demands of the system. The system's ability to meet these demands is detailed in **Chapter 8** and the recommended improvements are identified in **Chapter 9**.

The highest three governmental entities establishing policies and laws – U.S. Government, Washington State and King County Council – establish requirements in statutes, regulations or ordinances. The Duvall City Council and Mayor adopt policies that cannot be less stringent or in conflict with those established by governments above them. The City's policies take the form of ordinances, memoranda and operation procedures, many of which are summarized in this chapter.

Policies associated with the following categories are presented in this chapter:

- Water Service
- Water Supply
- Facilities
- Finance
- Organization

WATER SERVICE POLICIES

New Water Service

- The City will provide potable water service to all people within the city limits and designated water service area in a timely and reasonable fashion, provided all policies related to obtaining service are met.
- All proposed developments within the city limits and designated water service area will connect directly to the City's water system, unless deemed unfeasible by the City at the time of the request.
- Water system improvements required to provide water service to proposed developments must be approved by the Department of Public Works and must conform to the City's adopted design criteria, and construction standards and specifications, as shown in the *City of Duvall Development Design Standards* contained in **Appendix H**. Prior to being provided service the applicant shall install new water main to the limits of the property as required by the *Development Design Standards*. All costs of the permits and water system improvements will be paid by the applicant. Recovery contracts (latecomers fees) may be recorded against adjacent frontage as described in the *Development Design Standards*.
- Requests for new water service will be processed by the City's permit coordinator in accordance with *Section 9.02.020, Duvall Municipal Code*. Applications must be received at least one week prior to connection of water service. Once applications are received by the permit coordinator, the location of the proposed service will be reviewed to ensure it is within the City's retail water service area and will be evaluated to determine fire flow availability, meter size and improvements necessary for adequate water pressure, fire flow, looping or extensions. The adequacy of water system capacity to serve the applicant's property will also be evaluated at this time. New water service applications will be processed within one week of receipt of application and associated fees.
- The City will determine whether adequate water system capacity is available to serve the applicant's property, based on available capacity from supply, storage and transmission. This will be accomplished through the ongoing tracking of equivalent residential units served by the City in comparison to the maximum number of equivalent residential units that can be served by the system, as computed in **Chapter 8** of this Plan.
- Water service applications will expire at the time that the associated building permit expires or in the event that the water service is not made ready by the applicant for connection by the City within 120 days of the approval of the water service application.

- Time extensions in regards to water availability will be granted in accordance with the associated building permit requirements. When extensions are denied, a written notice of appeal, together with an appeal filing fee, may be submitted in person to the Permit Center. Appeals must be made within the time period specified under the requirements of the associated permit and in accordance with *Section 14.08, Duvall Municipal Code*.
- Delays resulting from non-technical conditions that affect the City's ability to provide new water service will be the responsibility of the applicant. These conditions include, but are not limited to, environmental assessments, local ordinances and annexation procedures.
- Water service can be extended outside of the city limits and within the UGA as long as the project is in compliance with the City's adopted land use plan, zoning and development regulations and a statement of intention to annex to the City is signed by the property owner.
- Water service can be extended outside of the City's UGA and within the City's future water service area, if the project is in compliance with King County's adopted land use plan, zoning and development regulations; and the applicant meets all other service policy requirements.
- Water service requests to areas outside of the City's future water service area boundary will be coordinated with adjacent water purveyors and the Department of Health, and evaluated on a case by case basis by the City Council. Water service to these areas shall be in compliance with King County's adopted land use plan, zoning and development regulations.

Annexations

- Areas annexed without existing municipal supply will be served by the City.
- Areas annexed with existing municipal supply will be upgraded to City of Duvall water standards within a reasonable amount of time.

Temporary Service

No temporary service is allowed, unless there are plans for permanent water service that meets all City standards.

Emergency Service

- Compliance with standards may be deferred for emergency water service.
- Policy criteria may be waived for emergency service.

Planning Boundaries

For planning purposes, the City will use water service boundaries established by agreement as a result of the regional coordinated water system plan (*East King County Coordinated Water System Plan*).

WATER SUPPLY POLICIES

Water Quality

- The City will strive to provide high quality water while complying with all water quality regulatory requirements.
- The City will take all reasonable measures to protect its system and customers, and will promptly respond to situations that may adversely affect water quality.

Water Quantity

- The City purchases all water supply from Seattle Public Utilities to serve all customers within the City's service area.
- The City will supply a sufficient quantity of drinking water to existing customers and plan for at least 20 years into the future for meeting the needs of the water system.
- The City will size new water system facilities and improvements to existing facilities to have sufficient capacity to meet all needs of the water system.

Water Use Efficiency and Regional Participation

- The City will participate in regional supply management and planning activities to reduce the cost of service while improving reliability, water quality and quantity.
- The City will promote the efficient and responsible use of water and will conserve water during a water shortage.
- The City has a water use efficiency program and participates in regional water conservation efforts. Documentation from the City's water use efficiency program is contained in **Appendix G**.

Cross-Connection Control

- The City strives to protect its water system from contamination due to cross-connections and has developed a cross-connection control program for eliminating cross-connections. Documentation from the City's cross-connection control program is contained in **Appendix I**.
- The City will comply with the backflow prevention assembly installation and testing requirements as indicated in *WAC 246-290-490* and as published in the manual titled *Cross Connection Control Manual Accepted Procedure and Practice, Pacific Northwest Section, American Water Works Association (AWWA)*.
- The City has staff that is certified as Cross-Connection Control Specialists.

FACILITY POLICIES AND DESIGN CRITERIA

This section describes the planning criteria and policies used to establish an acceptable hydraulic behavior level and a standard of quality for the water system. Additional criteria are contained in the *City of Duvall Development Design Standards* contained in **Appendix H**.

Minimum Standards

- All proposed developments within the City limits shall conform to the City's adopted design criteria, construction standards and specifications. Proposed development requesting City water service outside of the City limits but within the existing and future service areas shall conform with the City's water standards except for fire flow standards otherwise required by the governing jurisdiction.
- All projects within unincorporated King County **or its** right-of-way must be designed and constructed in accordance with King County Standards and must also be inspected and approved by King County Utility Inspection.
- The City water system staff utilize the following resources in accordance with WAC 246-290-200:
    - Department guidance on design for Group A public water systems;
    - The most recent published edition of the International Building Code (IBC), the Uniform Plumbing Code (UPC), and other national model codes adopted in Washington state;
    - The most recent published edition of Recommended Standards for Water Works, A Committee Report of the Great Lakes - Upper Mississippi River Board of State Public Health and Environmental Managers;
    - Standard specifications of the American Public Works Association, the American Society of Civil Engineers, AWWA, or the American Society for Testing and Materials;
    - Design criteria, such as contained in current college texts and professional journal articles, acceptable to the department;
    - Chapter 173-160 WAC Minimum Standards for Construction and Maintenance of Water Wells;
    - The latest edition of the PNWS-AWWA Cross-Connection Control Manual, or the University of Southern California (USC) Manual of Cross-Connection Control.
    - New drinking water materials and additives in accordance with WAC 246-290-220 and ANSI/NSF Standard 61.
    - Disinfection of the water system in accordance with WAC 246-290-451 and the standards published by the American Water Works Association:
        - In cases of new construction, drinking water shall not be furnished to the consumer until satisfactory bacteriological samples have been analyzed by a laboratory certified by the state.

- In cases of existing water mains, when repair/replacement is completed or the integrity of the main is lost resulting in a significant loss of pressure that places the main at risk to cross-connection contamination, the City shall requires standard industry practices such as flushing, disinfection, and/or bacteriological sampling to ensure adequate and safe water quality prior to the return of the line to service.

Water Pressure

- The City will supply water to all customers at a minimum pressure of 30 psi during all demand conditions, except when providing fire flow or during emergency situations.
- During fire flow situations, the City will maintain a minimum pressure of at least 20 psi at all customer meters and throughout the system.
- The City will provide pressure reducing stations to control pressures in the distribution system and avoid high pressures. It is the customer's responsibility to install a pressure reducing valve on the customer side of the water meter to reduce pressures to 80 psi or less.
- The City will endeavor to limit the maximum pressure to 120 psi in the water mains during normal demand conditions, excluding pressure surges.

Pipeline Velocities

- All new distribution system water mains will be designed to deliver the required amount of flow at a velocity of 8 feet per second or less. Velocities greater than 8 feet per second are acceptable within short lengths of pipe and within water system facilities.
- All new transmission mains will be designed to deliver the required amount of flow at a maximum velocity of 5 feet per second. Transmission mains designed with velocities greater than 5 feet per second will be evaluated for hydraulic surges (transient conditions) using a hydraulic model capable of surge analyses.

Storage Facilities

- Storage within the distribution system must be of sufficient capacity to supplement supply when system demands are greater than the supply capacity (equalizing storage) and still maintain sufficient storage for proper pump operation (operational storage), fire suppression (fire flow storage), and other emergency conditions (standby storage).
- Standby storage must be stored above the elevation that yields a 20 psi service pressure to all services in the zone that it directly serves under peak hour demand conditions.
- Fire flow storage must be stored above the elevation that yields a 20 psi service pressure to all services in the zone that it directly serves under peak day demand conditions.
- The City will provide sufficient standby storage for an emergency condition in which a major supply source is out of service. The volume of storage will be sufficient to maintain uninterrupted supply to the system during the emergency condition.

- The City will provide sufficient storage for a fire condition equal to the system's maximum fire protection water demand and the required duration.
- The City will have high-water level and low-water level alarms for all storage facilities at the Operations and Maintenance office.
- Water level data will be transmitted to the Operations and Maintenance office.
- Storage facilities will be located in areas where they will satisfy the following requirements:
    - Minimize fluctuations in system pressure during normal demands.
    - Maximize use of the storage facilities during fires and peak demand periods.
    - Improve the reliability of supply to the water system.

Transmission and Distribution Mains

- All new transmission and distribution mains will be looped to improve water quality, increase reliability and increase fire flow capacity, unless the City determines that looping is not practical.
- All new water mains will be designed under the direction of a professional engineer licensed in the State of Washington and will comply with the water quality testing and construction completion requirements of the Department of Health.
- All new construction will be in accordance with the *City of Duvall Development Design Standards*.
- Distribution mains will be a minimum 8-inch diameter. Water mains not required to carry fire flow may be 6-inch diameter, if approved by the City. All water mains will be ductile iron pipe with cement mortar lining.
- All new water mains will be sized by a hydraulic analysis.
- All new mains providing fire flow will be sized to provide the required fire flow at a minimum residual pressure of 20 psi and maximum pipeline velocity of eight feet per second during peak day demand conditions. In general, new water mains that will carry fire flow in residential areas shall be a minimum 8-inch diameter, and looped for multi-family residential developments. New water mains in commercial, business park, industrial, and school areas shall be a minimum 12-inch diameter and looped.
- Water mains shall be designed with the following valves:
    - Isolation valves shall be installed at locations along the water main to allow sections to be shut down for repair or installing services. The maximum distance between isolation valves shall not exceed 1,000 feet. A minimum of three valves shall be provided per cross, and two valves per tee.
    - Zone valves shall be located at all pressure zone boundaries when a water main crosses a pressure zone boundary without a pressure reducing station.
    - Combination air and vacuum release valves shall be placed at all high points of water main installations.

  - Blow-off assemblies shall be located at water main dead ends where there is not a fire hydrant. If a water main extension is expected in the future, the blow-off assembly shall have a valve the same size as the main with concrete thrust blocking.
  - Individual pressure reducing or check valves must be installed in all new customer service lines in the City. The *Uniform Plumbing Code* requires pressure reducing valves on customer service lines if pressures are greater than 80 psi. Pressure reducing valves protect customers from high pressures in case a mainline pressure reducing station fails. Check valves prevent hot water tanks from emptying into the water system when the water main is empty or when the pressure in the main is less than the pressure in the tank, and prevent contamination of the water system mains caused by possible cross-connections in the customer's pipes or fixtures.
- Fire hydrant installations will satisfy the following criteria:
  - Fire hydrants serving detached single family dwellings or duplex dwellings on individual lots will be located not more than 600 feet on center such that all single family lots are within 300 feet from a fire hydrant, as measured along the path of vehicular access.
  - Fire hydrants serving any use other than detached single family dwellings or duplex dwellings on individual lots will be located not more than 300 feet on center, and will be located so that at least one hydrant is located within 150 feet of all structures, but not closer than 50 feet, unless approved by the Duvall Fire Department.
  - Hydrants located in dead-end areas or cul-de-sacs shall service an area of no more than 120,000 square feet.
  - One fire hydrant shall be installed at each street intersection.
  - The Public Works Department will consult with the Duvall Fire Department and will review all proposed fire hydrant installations to ensure the correct number, location, and spacing of fire hydrants for each project.

Supply and Booster Pump Stations

- Improvements to existing and all new supply and booster pump stations will be designed to comply with the following minimum standards.
  - All structures will be non-combustible, where practical;
  - All buildings will have adequate heating, cooling, ventilation, insulation, lighting, and work spaces necessary for on-site operation and repair;
  - All sites will be fenced to reduce vandalism and City liability, where appropriate;
  - Each station will be equipped with a flow meter and all necessary instrumentation to assist personnel in operating and troubleshooting the facility;
  - Backup emergency power capability will be provided to at least one booster pump station supplying each pressure zone.

- Pumps will be operated automatically with flexibility in pump start/stop settings.
- Stations will be operated with the provision for at least two methods of control to minimize system vulnerability.
- Manual override of stations will be provided for and located at the Operations and Maintenance office using the City's telemetry and supervisory control system.
- Stations will be monitored with alarms for the following conditions:
    - Pump started automatically or manually;
    - Power phase failure;
    - Communication failure;
    - Flooding and fire;
    - Intrusion by unauthorized personnel;
    - Low suction pressure; and
    - High discharge pressure.
- Stations will have the following indicators:
    - Local flow indication and totalizing;
    - Flow indication and totalizing at the Operations and Maintenance office; and
    - Recording of combined supply to the system.
- Stations will be placed wherever necessary to fulfill the following criteria:
    - Provide supply redundancy to a pressure zone;
    - Improve the hydraulic characteristics of a pressure zone;
    - Maximize storage availability and transmission capacity; and
    - Improve water quality (i.e., increase circulation) and quantity.

Pressure Reducing Stations

- All pressure reducing valves will be placed in vaults that are large enough to provide ample work space for field inspection and valve repair.
- Vaults will drain to daylight or be equipped with sump pumps to prevent vault flooding.
- Pressure relief valves will be provided on the low-pressure side of the pressure reducing valves to prevent system over-pressurizing in case of a pressure reducing valve failure and will be sized by hydraulic analysis.

Control

The City's control system must be capable of efficiently operating the water system's components in accordance with this Plan and in response to reservoir levels, system pressures, abnormal system conditions, electrical power rate structure, and water costs. The system must be reliable and kept up to date to avoid disruption of customer water service and maintain efficient use of water supplies.

Maintenance

- Facility and equipment breakdown is given highest maintenance priority. Emergency repairs will be made even if overtime labor is involved.
- Equipment will be scheduled for replacement when it becomes obsolete and as funding is available.
- Worn parts will be repaired, replaced, or rebuilt before they represent a high failure probability.
- Spare parts will be stocked for all equipment items whose failure will impact the ability to meet other policy standards.
- Equipment that is out of service will be returned to service as soon as possible.
- A preventive maintenance schedule will be established for all facilities, equipment, and processes.
- Tools will be obtained and maintained to repair all items whose failure will impact the ability to meet other policy standards.
- Dry, heated shop space will be available for maintenance personnel to maintain facilities.
- All maintenance personnel will be trained to efficiently perform their job descriptions.
- Maintenance will be performed by the water maintenance staff and supervised by the City Engineer.
- Written records and reports will be maintained on each facility and item of equipment showing operation and maintenance history.

FINANCIAL POLICIES

General

- The City will set rates that comply with standards established by the AWWA.
- Rates and additional charges established for the City should be:
    - Cost-based rates that recover current, historical, and future costs associated with the City's water system and services;
    - Equitable charges to recover costs from customers, commensurate with the benefits they receive; and
    - Adequate and stable source of funds to cover the current and future cash needs of the City.
- Existing customers of the City will pay the direct and indirect costs of operating and maintaining the facilities through user rates. In addition, the user rates will include debt service incurred to finance the capital assets of the City.
- New customers seeking to connect to the water system will be required to pay a connection charge for an equitable share of the historical cost of the system and for the system's capital improvement program (CIP). Connection charge revenues will be used to fund the CIP in conjunction with rate revenue.

- New and existing customers will be charged for extra services through separate ancillary charges.
- The City will maintain information systems that provide sufficient financial and statistical information to ensure conformance with rate-setting policies and objectives.
- User charges must be sufficient to provide cash for the expenses of operating and maintaining the system. To ensure the fiscal and physical integrity of the utility, each year an amount should also be set aside and retained for capital expenditures, which will cover some portion of the depreciation of the physical plant. The amount may be transferred from the Maintenance Fund to the Construction Fund for general purposes or for specific purposes.
- A Working Capital Reserve will be maintained to cover unanticipated emergencies and fluctuations in cash flow. The City will maintain a cash reserve for the Maintenance Fund.
- Water rates will be based on either the Base-Extra Capacity Method or the Commodity-Demand Method. Both methods strive to equitably charge customers with different service requirements based on the cost of providing the water service. Service requirements relate to the total volume of water used, peak rates of use, and other factors.
- Fees and charges are calculated for the service area as a whole. Rates will be the same regardless of service location for existing customers. Rates charged in annexed areas will be evaluated on an individual basis by the City.

Connection Charges

- Owners of properties that have not been assessed, charged, or borne an equitable share of the cost of the water system will pay one or more of the following connection charges prior to connection to a water main.
    - Recovery Contracts (Latecomers Fees): Recovery contracts are negotiated with developers and property owners to provide for the reimbursement of a pro rata portion of the original cost of water system extensions and facilities.
    - General Facilities Charge: The connection charge will be assessed against any property that has not participated in the development of the water system. Meter charges, or hookup fees, are additional in order to recover the cost of meter and service line installation.
    - Developer Extension Charges: These charges are for the administration, review, and inspection of developer extension projects.

ORGANIZATIONAL POLICIES

Staffing

- Personnel certification will comply with state standards.
- The Water Department will promote staff training.

Relationship with Other Departments

- The Finance Department is responsible for customer billing, payment collection, project cost accounting, fund activity reporting, employee records, union labor negotiations and salary schedules.
- The Police Department is responsible for enforcing violations of City water ordinances.
- The Fire Department uses water utility facilities for fire protection and establishes fire flow requirements.
- The Fire Department is responsible for emergency responses to hazardous events at water system facilities.
- The Fire Department is responsible for hydrant fire flow testing.
- Fire hydrant testing is performed jointly by the Fire Department and the Water Department.

6

Water Source and Quality

INTRODUCTION

The two basic objectives of a water system are to provide sufficient water quantity to meet demands and to provide high quality water. **Chapter 8** discusses the City's ability to supply a sufficient quantity of water. This chapter discusses the City's existing water source, monitoring requirements, and results of past water quality monitoring.

PRIMARY WATER SOURCE

Supply Overview

The City of Duvall has received its water from Seattle Public Utilities (SPU) since 1962. SPU supplies water to its direct retail service customers and to 28 neighboring suburban cities and special water districts that are wholesale customers of SPU. The supply of wholesale water from SPU to the City of Duvall has been provided under the terms of the 1981 Water Purveyor Contract and subsequent amendments. The City entered into a new long-term contract with SPU in May 2011 to purchase water supply at wholesale rates. The new contract will remain in effect until January 1, 2062, at which time it will terminate. A copy of the current water supply contract is contained in **Appendix B**.

The SPU water supply contract identifies the minimum hydraulic head of water supply that SPU must maintain at each of the City's supply facilities, which is 645 feet at Tolt 1 Supply Station and 640 feet at Tolt 2 Supply Station, based on the NAVD88 datum. SPU is obligated to provide water supply at pressures that meet or exceed these minimum heads and the City is responsible for providing pumping equipment, as necessary, to further increase the pressure of the water being supplied to meet the demands of the system. The City is also required to provide sufficient equalizing storage to avoid placing peak demands on SPU's regional supply system.

The City also owns the Taylor's Landing Well near the intersection of Duvall-Monroe Road and Cherry Valley Road. The City stopped using this well for municipal water supply in the 1960's, but still maintains water rights for the well and currently utilizes the well for non-potable uses.

SPU Source Description

The primary sources of water for SPU's regional supply system are from the Cedar River and Tolt River. The water that the City receives from SPU is from the Tolt River source, which is located approximately 15 miles east of the City, as shown in **Figure 6-1**. The Tolt River source, which was first put into use in the early 1960's, provides approximately one-third of the total water supply for SPU's regional supply system. The Tolt River system includes a 19-square-mile watershed that drains into the 60,000 acre-foot South Fork Tolt Reservoir. Water is diverted from the reservoir into the Tolt Regulating Basin, then to the Tolt Treatment Facility, and finally into the Tolt Pipeline No. 1, which transports the water to purveyors that are

primarily located north and south of Seattle. The City's transmission mains connect to the Tolt Pipeline No. 1 at two locations. The east connection, named "Tolt 1 Supply Station" by the City, is approximately 3,000 feet southeast of the city limits, near the intersection of 292nd Ave NE and NE Big Rock Road. The west connection, named "Tolt 2 Supply Station" by the City, is located on 274th Avenue NE approximately 2,800 feet south of the city limits. The Tolt transmission main proceeds west to its terminus in Bothell at the Tolt Eastside Supply Line (TESSL) junction. Here, a portion is diverted into the TESSL supply line which runs south into Kirkland, Redmond, and Bellevue and the remaining portion is transported northwesterly to the 60 million gallon (MG) Lake Forest Park Reservoir.

The Cedar River system, which was first put into use in the early 1900's, provides approximately two-thirds of the total water supply for SPU's regional supply system. The Cedar River system primarily supplies south Seattle and communities east of Lake Washington and south of I-90. The Cedar River source originates from the 1,680 acre Chester Morse Lake located in the upper portion of the Cedar River Watershed in southeast King County. Water from the lake travels down the Cedar River for approximately 12 miles, where a portion is diverted at Landsburg and conveyed to Lake Youngs, an approximate 700-acre reservoir. The Lake Youngs Reservoir serves as a regulating basin for the Cedar system by providing a nearly constant pressure as a result of the elevation of the water stored in the reservoir. The water passes through the control works at Lake Youngs and into four Cedar River pipelines (CRPL No. 1 through 4). Water from CRPL No. 4 supplies the Cedar Eastside Supply Line (CESSL) which follows a north-south alignment on the east side of Lake Washington. The TESSL and CESSL supply lines are connected in Bellevue, so it is possible to supply Duvall and other purveyors from either source.

Figure 6-1
SPU's Regional Water Supply System

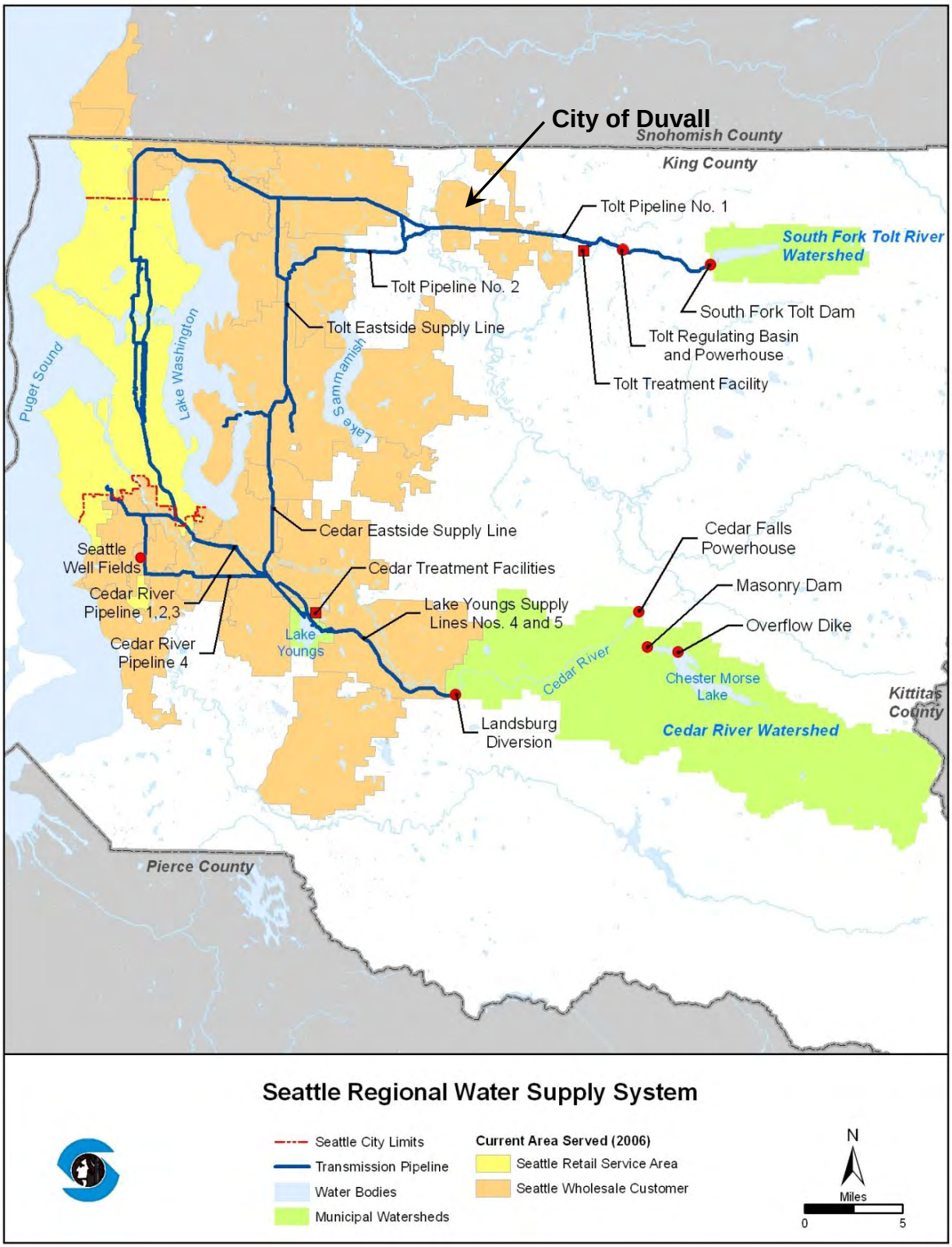

The City has primarily been served with water that originates from the Tolt River System, but occasionally received water from the Cedar River system in the past. This change of water source typically occurred when the Tolt River source required maintenance or experienced excessive turbidity levels as a result of stormwater runoff during these periods of heavy rain, which required SPU to shut down the Tolt River source and use the Cedar River source. The construction of the Tolt Treatment Facility in 2000 increased the reliability of the Tolt River source by enabling SPU to operate during periods of high turbidity. Water supplied to the City from the Cedar River source is now expected only during emergency or routine maintenance periods.

Three production wells, located south of Seattle in the Highline area (referred to as the Highline Well Field), also provide supplemental water supply to SPU's system during periods of peak water demands. This water does not enter the City's system because their small output (approximately 10 MGD) primarily serves the localized area of the wells.

TAYLORS LANDING WELL

Water Rights Overview

A water right is a legal authorization to use a specified amount of public water for specific beneficial purposes. The water right amount is expressed in terms of instantaneous withdrawal rate and annual withdrawal volume. Washington State law requires users of public water to receive approval from the Washington State Department of Ecology (Ecology) prior to actual use of the water. This approval is granted in the form of a water right permit or certificate. However, a water right is not required for certain purposes that use 5,000 gallons per day or less of groundwater from a well.

The process for obtaining a water right involves obtaining a water right permit and then a water right certificate. A water right permit provides permission to develop a water right by constructing, developing, and testing the water source. A water right permit remains in effect until a water right certificate is issued (if all terms of the permit are met) or the permit has been canceled. A water right certificate is issued by Ecology following a review process and determination that the amount of water put to beneficial use is consistent with the amount and conditions indicated on the water right permit.

A water right permit is issued by Ecology only if the proposed use meets the following requirements:

- Water will be put to beneficial use;
- No impairment to existing or senior rights;
- Water is available for appropriation;
- Issuance of the requested water right will not be detrimental to the public's interest.

The water right decision process also considers existing basin management plans, stream closures, instream flows, hydraulic continuity (surface water interconnected to groundwater), seawater intrusion, utilization of existing water sources, water conservation, and availability of

alternative water supplies, among other things. The water right decision process is increasingly becoming more complex and time consuming, due to the many competing interests for water, environmental issues, and regulatory requirements.

Existing Water Rights

The City of Duvall currently holds a water right certificate for the Taylor's Landing Well, located in the northwest portion of the City. Water right certificate number 674 D certifies a maximum instantaneous withdrawal of 65 gpm or a maximum annual withdrawal of 35 acre-feet of groundwater from Taylor's Landing Well for the purpose of municipal supply. The priority date for the groundwater right is April 8, 1940 and the water right place of use has been established as the City of Duvall. The 2003 Municipal Water Law defines the place of use as the area served. Thus, the place of use for this water right is Duvall's retail water service area, which extends beyond the City's corporate boundaries as shown in **Figure 2-3**.

The City capped the Taylor's Landing Well and closed it to open public use in 2000 for liability reasons. The well is now securely capped and locked and is used by the City's Public Works Department to fill water trucks for irrigation and other City non-potable uses. However, the City is leaving the option open that the well may be used in the future as an emergency backup source for the water system. The City's Wellhead Protection Program, which is included in **Appendix J**, has been prepared in the event that the City decides to use the well in the future for purposes other than irrigation. Additional water rights information is contained on the Taylor's Landing Well water right certificate, which is included in **Appendix K**.

Water right claim G1-026854CL, which has a maximum instantaneous withdrawal of 15 gpm and a maximum annual withdrawal of 5 acre-feet, is also held by the City, but not used. It is unknown whether this claim represents a vested water right and the City is not interested in pursuing the development of this water right claim for future use.

Wellhead Protection Program

Section 1428 of the 1986 SDWA Amendments mandates that each state develop a wellhead protection program. The Washington State mandate for wellhead protection and the required elements of a wellhead protection program are contained in WAC 246-290-135 Source Water Protection, which became effective in 1994. In Washington State, DOH is the lead agency for the development and administration of the State's wellhead protection program.

A wellhead protection program is a proactive and ongoing effort of a water purveyor to protect the health of its customers by preventing contamination of the groundwater that it supplies for drinking water. All federally defined Group A public water systems that use groundwater as their source are required to develop and implement a wellhead protection program. All required elements of a local wellhead protection program must be documented and included in either the Comprehensive Water System Plan (applicable to Duvall) or Small Water System Management Program document (not applicable to Duvall). A copy of the City's Wellhead Protection Program is contained in **Appendix J** of this plan. As mentioned earlier in this chapter, the City does not currently use the Taylor's Landing Well for potable water, but may intend to do so in the future.

SOURCE WATER QUALITY AND TREATMENT

Overview

The quality of drinking water in the United States is regulated by the Environmental Protection Agency (EPA). Under provisions of the Safe Drinking Water Act (SDWA), the EPA is allowed to delegate primary enforcement responsibility for water quality control to each state. In the State of Washington, the Department of Health (DOH) is the agency responsible for implementing and enforcing the drinking water regulations. For the State of Washington to maintain primacy (delegated authority to implement requirements) under the SDWA, the state must adopt drinking water regulations that are at least as stringent as the federal regulations. In meeting these requirements, the State in cooperation with DOH has published drinking water regulations that are contained in WAC 246-290.

The drinking water regulations that affect the City currently and in the future are dictated by the City's supply arrangement. Currently, the City receives treated water from SPU and most of the monitoring is accomplished by the regional purveyor. If the City develops its own source of water supply in the future, many of the existing and future drinking water regulations will apply and result in a substantial increase of water quality monitoring and reporting for the City.

Source Treatment

The City's water supply is treated by SPU before it reaches the City and SPU is responsible for the quality of the water from the source to the City's two metered supply connections. Water treatment for the Tolt and Cedar River water source currently consists of filtration (Tolt only), intake screening, chlorination, fluoridation, ozone, and pH and alkalinity adjustment. Additionally, the Cedar supply is treated with UV light. Chlorine is added to kill naturally occurring bacteria, and fluoride is added to prevent tooth decay. Alkalinity and pH adjustment is provided for corrosion control treatment. Filtration also increases the reliability of the Tolt source by enabling operation during periods of high turbidity, such as heavy rain or low reservoir levels. Ozone and UV light are used to kill additional bacterial contaminants, such as Cryptosporidium, which are resistant to chlorine. Unlike chlorine, ozone and UV light treatments do not leave a residual in the water, meaning that chlorination is still necessary. Historically, the water quality in both the Tolt and Cedar River sources has been good.

Source Monitoring Results

The water quality laboratory of SPU routinely monitors the quality of water at the Cedar and Tolt River sources for regulated and non-regulated contaminants. A summary of SPU monitoring results is presented in the City's latest Consumer Confidence Report in **Appendix M** and on the SPU website at:
http://www.seattle.gov/util/About_SPU/Water_System/Water_Quality/WaterQualityAnnualReport/index.htm

DISTRIBUTION SYSTEM WATER QUALITY

Overview

The City does not provide additional water treatment because SPU provides a treated, reliable and high-quality supply of water to the City's system. The City is responsible for the quality of the water within its water distribution system. SPU currently completes the required chlorine residual and coliform monitoring within the City's distribution system. City responsibilities include completing supplemental monitoring and ensuring new water mains, connections, and work on the system from pressure loss events or leaks are disinfected in accordance with applicable requirements. Additional water quality monitoring will be required in the future if the Taylor's Landing Well is placed into use.

Monitoring Requirements and Results

Water quality monitoring requirements are contained in WAC 246-290-300 and summarized in **Table 6-1**. As part of its regional monitoring program, SPU has an agreement with DOH that permits SPU to submit 70 percent of the number of samples listed in WAC 246-290-300 for each purveyor they supply with water. In accordance with WAC 246-290-300 and this agreement, the City must comply with the following monitoring requirements because it receives completely treated water from another public water system:

1. Perform coliform sampling and testing in accordance with WAC 246-290-300. SPU provides coliform monitoring of the City's water system as part of its regional monitoring program. The City is responsible for follow-up or repeat sampling if samples collected by SPU test positive for coliform in accordance with WAC 246-290-320. SPU currently collects a minimum of five samples each month from water quality monitoring sample stands at two different locations in the City's distribution system. These locations are at the intersection of 3rd Avenue NE and NE Stewart Street, and at 28522 NE 151st Street. SPU uses its own certified laboratory for the water quality analysis work. The results of coliform tests from the last seven years have all been satisfactory. The City's Water Quality Monitoring Plan, which presents a more detailed discussion of the coliform monitoring activities, is contained in **Appendix L**.
2. Perform chlorine residual sampling and testing in accordance with WAC 246-290-662. The minimum residual disinfectant concentration entering the City's distribution system shall be at least 0.2 mg/L. Samples taken within the distribution system are required to have a residual disinfectant concentration that is detectable in at least 95 percent of the samples taken each calendar month. SPU provides residual chlorine monitoring of the City's water system in conjunction and at the same frequency and sampling locations as the coliform monitoring. The results of the chlorine residual tests from the last seven years have all been satisfactory with a 2004-2010 average monthly minimum of 0.89 mg/L, maximum of 1.36 mg/L, and overall average of 1.1 mg/L.
3. Perform lead and copper monitoring required under Section (5) of WAC 246-290-300, 40 CFR 141.86, 141.87, and 141.88. The City participates in SPU's regional lead and copper monitoring program. The City obtained samples from three locations within the water service area most recently in 2008 as part of the SPU program and all samples were below action levels. The next monitoring period of the SPU program will be completed in 2011.

4. Perform disinfection by-products sampling and testing in accordance with Section (6) of WAC 246-290-300 for total trihalomethanes (TTHM) and five haloacetic acids (HAA5). Disinfection by-products sampling and testing will be required every 90 days after the start of the program in April 2012. As planned, SPU will provide disinfection by-products sampling and testing as part of its regional monitoring program. Based on the 2008 Initial Distribution System Evaluation (IDSE) program, samples will be collected at a total of four sites: sample stands at 28522 NE 151st Street and 26801 Stewart St NE; the existing hydrant or new sample stand at 16404 270th Place NE; and the existing hydrant or new sample stand at 27620 NE 158th Place. Bromate testing required by WAC 290-46-300(6) will be completed by SPU prior to the entry point to the City's distribution system.
5. Asbestos monitoring is required in accordance with 40 CFR 141.23(b) if the sources are vulnerable to asbestos contamination or if more than 10 percent of the distribution system contains asbestos cement pipe. Asbestos cement pipe is present in the City's water system but constitutes only 5.7 percent of the City's distribution system. The City was granted an asbestos monitoring waiver from DOH in 2002 and the waiver will continue for the 2011-2019 period and future nine-year monitoring periods.
6. Disinfection of water system construction, connection, repair, or loss of integrity in accordance with WAC 246-290-451 and the standards published by the American Water Works Association:
   a. In cases of new construction, drinking water shall not be furnished to the consumer until satisfactory bacteriological samples have been analyzed by a laboratory certified by the state.
   b. In cases of existing water mains, when repair/replacement is completed or the integrity of the main is lost resulting in a significant loss of pressure that places the main at risk to cross-connection contamination, the City implements standard industry practices such as flushing, disinfection, and/or bacteriological sampling to ensure adequate and safe water quality prior to the return of the water main to service.

If unsatisfactory samples from the above monitoring are detected, the procedures in WAC 246-290-320 must be followed for repeat sampling, Department of Health notification, and customer notification.

Table 6-1
City of Duvall Water Quality Monitoring Requirements

Location	Test	Last Tested	Schedule	City's Requirement
Distribution System	Routine Coliform	On-Going	SPU tests 5 samples per month by agreement with DOH.	City to provide follow-up samples if required (WAC 246-290-320)
Distribution System	Chlorine Residual	On-Going	SPU tests samples in conjunction with coliform sampling	City voluntarily completes weekly supplemental testing at 2.2 MG reservoir.
Customer Taps	Lead and Copper	2008	Completed every 3 years, next one in 2011.	City participates following SPU notification.
Distribution System	Disinfection By-products (TTHM, HAA5)	NA	Every 90 days beginning in 2012. Four samples of TTHM and HAA5 are collected at pre-determined locations.	Coordinate with SPU to collect samples and complete testing.
Distribution System	Asbestos	NA	City distribution system has less than 10% asbestos pipe and received a testing waiver in 2002.	Not required.
Distribution System	General Disinfection	On-Going	At time of water system construction, connection, repair, or loss of integrity	Laboratory water quality sample suite testing

Consumer Confidence Report

The Consumer Confidence Report is a report on the quality of water that was delivered to the system during the previous 12 months in accordance with WAC 246-290-72001. The annual report must be updated and re-issued to all customers by July 1st of each year. The report must contain information on the quality of the water delivered by the systems and characterize the risks (if any) from exposure to contaminants detected in the drinking water in an accurate and understandable manner. The report may also contain other information that the purveyor deems appropriate for public education. Some, but not all, of the information that is required in the reports include the source and type of the drinking water, type of treatment, contaminants that have been detected in the water, potential health effects of the contaminants, identification of the likely source of contamination, violations of monitoring and reporting, and variances or exemptions to the drinking water regulations. A copy of City's latest Consumer Confidence Report at the time of this writing is included in **Appendix M**.

PLANNING OF FUTURE WATER SUPPLIES

Taylor's Landing Well

The City currently holds a water right to the Taylor's Landing Well which permits a maximum of 35 acre-feet of water to be used annually, or approximately 11.4 million gallons. This is less than 10 percent of the City's annual water demand, which is expected to increase in the future. Although the Taylor's Landing Well may not be able to provide the City with a sole source of water supply, the development of this water supply may be utilized to supplement future sources,

possibly presenting a cost savings to the City by reducing the amount of water purchased from regional suppliers in the future. However, development of this source will require the City to comply with many of the Federal Safe Drinking Water Act requirements. The costs of these water treatment and monitoring requirements, which are currently provided in most part by SPU, may outweigh the potential cost savings in the reduction of purchased water.

The City may also pursue the acquisition of additional water rights to fully supply its customers with water produced by the City. Given the complexities involved and the lengthy process of obtaining additional water rights, this may not be a feasible option. The future use of groundwater, whether from the existing Taylor's Landing Well or from another source within the City, will be analyzed in an extensive geologic, hydrologic and financial feasibility basis if the City decides to pursue this option.

Purchased Water from SPU

The Seattle Water Supply Contract is essentially a long-term agreement that requires Seattle Public Utilities (SPU) to supply a reliable source of treated water to the City of Duvall at wholesale prices, based upon the City's long-term commitment for water demand. The original contract, dated November 1981, was amended on June 6, 1994 and was set to expire on January 1, 2012. The City entered into a new long-term contract with SPU in May 2011 to purchase water supply at wholesale rates for the next 50 years. The new contract will remain in effect until January 1, 2062, at which time it will terminate. A copy of the new contract is contained in **Appendix B**.

7

Operations and Maintenance

INTRODUCTION

The City of Duvall operations and maintenance program has been developed in accordance with WAC 246-290-415 and consists of the following elements:

- Normal Operations
- Emergency Operations
- Preventive Maintenance

NORMAL OPERATIONS

City Personnel

The City's Public Works Department functions under the direction of the Public Works Director, Mr. Steven Leniszewski. The current water department operations and maintenance staff consists of several maintenance personnel that function under Mr. Leniszewski, as shown in **Table 7-1**. The water system tasks that are performed by the operations and maintenance staff include inspection, testing, installation, and repair of system facilities, routine operation and preventive maintenance, record keeping, administrative tasks, general clerical work, and corrective or breakdown maintenance required in response to emergencies. The City provides Department of Health (DOH) with the current names, addresses, and telephone numbers of the owners, operators, and emergency contact persons for the City water system. The City also maintains 24-hour pager and phone availability and responds to consumer concerns and service complaints in a timely manner.

Washington State Law (WAC 246-292) requires the City's system to be operated by one or more certified operators. In addition, specialty certification is required for backflow device testing. **Table 7-2** shows the current certifications of the City's operations and maintenance staff. It is City policy to maintain a well-qualified, technically-trained staff. The City annually allocates funds for personnel training, certification, and membership in professional organizations, such as the American Water Works Association (AWWA). The City believes that time and money invested in training, certification, and professional organizations are repaid many times in improved safety, skills, and confidence.

Table 7-1
Organization Chart

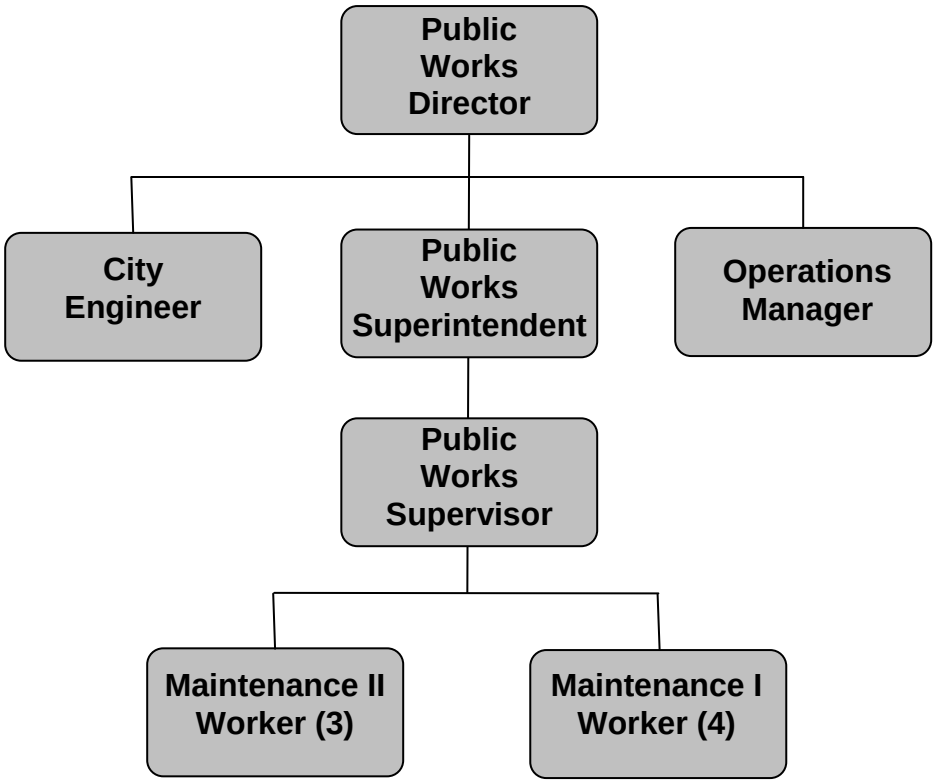

Table 7-2
Personnel Certification

Name	Position	Certification
Steven Leniszewski, PE	Director of Public Works	WDM2, CCS, PE
Mike Fisher	Public Works Superintendent	WDM2, CCS
Mike Marty	Operations Manager	WDM2
Boyd Benson, PE, LEG	City Engineer	WDM2, PE, LEG
Joe Chriest	Public Works Supervisor	WDM2, CCS
Brad Lauer	Maintenance II Worker	WDM2, CCS, BAT
James Shelton	Maintenance II Worker	WDM1
Various	Maintenance I and II Workers	

Certificate Definitions:
WDM - Water Distribution Manager
CCS - Cross-Connection Control Specialist
BAT - Backflow Assembly Tester

Personnel Responsibilities

The key responsibilities of the water operations and maintenance staff are summarized below.

Director of Public Works: Ultimate responsibility for the water system. Directs the activities of all divisions of the Public Works Department. Represents the City at regional activities.

Public Works Superintendent: This staff member is responsible for the day-to-day operation of the water system including adjusting the water system supply and storage facilities to meet daily demands. Assists in planning the construction, maintenance and operations activities of the water system.

Operations Manager: Acts as the telemetry coordinator and as a telemetry operator.

City Engineer: Assists in planning the construction, maintenance and operations activities of the water system. Involved in the decision making process during system troubleshooting, emergency response situations, implementation of system upgrades, and is part of the budget process for system improvements.

Public Works Supervisor: Assists the Public Works Superintendent in maintenance and operations activities in the water system and directs Maintenance Staff.

Maintenance Staff: Assists the Public Works Supervisor in maintenance and operations activities, including on-call and emergency duties. These activities also include water system inspection, repair, hydrant exercising, and valve exercising.

Available Equipment

The City has several types of equipment available for daily routine operation and maintenance of the water system. The equipment is stored at the City's Public Works Facility. If additional equipment is required for specific projects, the City will rent or contract with a local contractor for the services needed. An inventory of supplies in sufficient quantities for normal system operation and maintenance and short term emergencies is stored at the Public Works Facility. A list of equipment and supplies used in the normal operation of the water system is shown in **Table 7-3**.

Table 7-3
Equipment and Supplies

Equipment	Quantity
Dump Truck	3
Backhoe	2
Mini-Excavator	1
Compactor (3' roller)	2
Compactor (vibratory plate and jumping jack)	1
Water Tapping Machine (1" max.)	1
Service Truck	1
Flow diffuser and dechlorinator	1
Miscellaneous tools and testing equipment	1
Communications Equipment (radio, cell phone, pager)	Various

The Water Department utilizes several different types of communications equipment to ensure a reliable and redundant means of communication within the Department. All vehicles are equipped with mobile two-way radios that are capable of communicating with similar base radios at the City's Public Works Department and other departments. The radios also provide the capability for personnel to communicate, as necessary, with other cities and the County. In addition, all Water Department personnel carry city-issued cell phones and an emergency pager is monitored after normal work hours.

Routine Operations

Routine operations involve the analysis, formulation, and implementation of procedures to ensure that the facilities are functioning efficiently and meeting pressure requirements and other demands of the system. The City's maintenance procedures are good, with repairs being made promptly, assuring customers receive high-quality water service and limited interruptions.

Continuity of Service

As a municipality, the City of Duvall has the structure, stability, authority, and responsibility to assure that water service will be continuous. For example, changes in the Council or Staff would not have a pronounced effect on the City's customers or quality of service.

Routine Water Quality Sampling

The Washington State Department of Health (DOH) has adopted federal regulations that specify minimum monitoring requirements for water systems. The sampling requirements depend on the population served, source type, and treatment provided. The specific requirements are contained in WAC 246-290-300 and the minimum monthly routine coliform sampling requirements are summarized in **Table 6-1**of **Chapter 6**. Seattle Public Utilities (SPU) currently performs all routine coliform sampling throughout the distribution system and has an agreement with DOH for reduced monitoring. The agreement specifies a minimum of five (5) samples to be collected from the City's water system every month. However, SPU typically collects six (6) samples each month, which is the minimum amount specified in WAC 246-290-300. A further

discussion of the water quality monitoring program is contained in **Chapter 6** and in the City's Water Quality Monitoring Plan, located in **Appendix L**.

Cross-Connection Control

The City has adopted a cross-connection control program to comply with WAC 246-290-490 pertaining to contamination of potable water due to cross-connections. The City's cross-connection control program commences at the Tolt 1 and 2 supply stations and includes the downstream distribution and storage system. Backflow prevention devices are required at service connections where a potential for contamination exists. **Appendix I** includes a copy of the City's Cross-Connection Control Plan. As shown in **Table 7-2**, the City employs several certified Cross-Connection Control Specialists.

Recordkeeping and Reporting

DOH has enacted regulations for recordkeeping and reporting that may be found in WAC 246-290-480. The regulations identify recordkeeping and reporting procedures for operations and water quality testing.

Recordkeeping

Records shall be kept for chlorine residual and other information as specified by DOH. DOH requires retention of critical records dealing with facilities and water quality issues as summarized below.

- Bacteriological analysis results: 5 years.
- Chemical analysis results: for as long as the system is in operation.
- Daily source meter readings: 10 years.
- Other records of operation and analyses as may be required by DOH: 3 years.
- Chlorine residual analysis results: 3 years.
- Documentation of actions to correct violations of primary drinking water standards: 10 years after last corrective action.
- Records of sanitary surveys: 10 years.
- Project reports, construction documents and drawings, inspection reports, and approvals: life of the facility. Public Notices and Certifications associated with the water system: 3 years.
- Cross-Connection Control program:
    - Records pertaining to the master list of service connections and/or consumer's premises shall be kept as long as the premises pose a cross-connection hazard to the purveyor's distribution system;
    - Records regarding inventory information shall be kept for five years or for the life of the approved backflow preventer whichever is shorter;
    - Records regarding backflow incidents and annual summary reports shall be kept for five years.
- Other records, including fluoride levels, treatment plant performance, and other source characteristics are maintained in accordance with DOH by SPU.

The City's recordkeeping procedures are as follows:

- All records include the date, place, time of sample, and name of person collecting the sample. Electronic data with these attributes are retained as opposed to signature as required in WAC 246-290-480.1.a.
- All sample analysis records include the identification of sample type, date of analysis, laboratory and person responsible for performing the analysis, analytical method used, and results of the analysis.
- All water quality and quantity data, collected in-house and provided by SPU, is recorded and managed by the Engineer Aide/Public Works Director Assistant. The data is kept in spreadsheet format saved on the City computer server and back-up data tapes.
- Maintenance workers, inspectors, or other staff provides information to the Public Works Superintendent and/or City Engineer, who must review the information prior to it being filed.
- Project reports, construction documents and drawings, inspection reports, and approvals are saved both in electronic format and Mylar or paper format.

Reporting and Notification

- All notifications shall be in accordance with WAC 246-290-71001, 246-290-71002, 246-290-71003, 246-290-71004, and WAC 246-290-71007.
- The City must report the following to DOH:
    - Within 48 hours: A failure to comply with the primary standards or treatment technique requirements specified in WAC 246-290.
    - Within 48 hours: A failure to comply with the monitoring requirements specified in WAC 246-290.
    - Within 48 hours: A violation of a primary maximum contaminant level (MCL).
    - Within one business day: A backflow incident, per WAC 246-290-490 (8)f.
- The City must submit to DOH all applicable reports required by WAC 246-290. Monthly reports are due by the tenth day of the following month, unless otherwise specified. The City shall also submit to DOH certification that the City has complied with public notification regulations in accordance with 40 CFR 141.31(d).
- Daily source meter readings must be made available to DOH on request.
- Total annual water production records for each source must be made available to DOH on request.
- Water facilities inventory and report form (WFI) must be submitted to DOH within 30 days of any change in name, category, ownership, or responsibility for management of the water system.
- The City must complete the cross-connection control program summary report annually.
- The City must notify DOH as soon as possible, but no later than the end of the next business day, when a backflow incident is known by the City to have:
    - Contaminated the public water system; or
    - Occurred within the premises of a consumer served by the City.

- The City must notify DOH of the presence of:
  - Coliform in a sample within 10 days of notification by the testing laboratory.
  - Fecal coliform or E. coli in a sample by the end of the business day in which the City is notified by the testing laboratory.
- When a Tier 1 coliform MCL violation is determined in accordance with 40 CFR 141.202, the City must:
  - Notify DOH within 24 hours of determining acute coliform MCL violations.
  - Notify DOH before the end of the next business day when a non-acute coliform MCL is determined.
  - Notify water customers in accordance with WAC 246-290-71001 and 40 CFR 141.20.
- The City shall notify the system users when any other Tier 1 Violations in accordance with 40 CFR 141.202, any Tier 2 Violations in accordance with 40 CFR 141.203, and Tier 3 violations in accordance with 40 CFR 141.204 reported to the City by SPU as part of their monitoring program. The City shall also notify the consumer within 21 days of receipt of a confirmation sample where a State Allowable Limit (SAL) is exceeded in accordance with WAC 246-290-71006.
- The City shall notify the system users when the system is issued a DOH order, fails to comply with a DOH order, or is issued a category red operating permit.

Other Reports

Several other reports are required for state agencies, including the Department of Revenue, Department of Labor and Industries, Department of Social and Health Services, Department of Ecology, and the Employment Security Department. All of these reports are completed according to their instructions. If the City is unable to satisfactorily address departmental concerns or consumer complaints regarding the level of reliability associated with normal or abnormal operating conditions, the purveyor may be required to prepare a project report pursuant to WAC 246-290-110.

Operations and Maintenance Records

Facilities Operations and Maintenance Manuals

Operations and maintenance manuals are available for staff members' reference. The equipment and operational maintenance manuals required for all supply stations and equipment therein, PRV stations and equipment therein, booster stations and equipment, and reservoirs are maintained and housed in the equipment maintenance file at the Public Works Facility. The City intends to maintain its policies of requiring complete operation and maintenance manuals for all new equipment.

Mapping and As-Built Drawing Records

Maintenance of drawings is essential to maintenance crews, city planners, developers and anyone else needing to know how the water system is laid out throughout the City. Duvall maintains a comprehensive mapping and record keeping system of the City's water system. This mapping is comprised of physical maps, historical data books and computer generated maps in AutoCAD

and GIS formats. Mapping of the system is a continuous process of incorporating new data from surveys, sketches and digital pictures. City staff are currently in the process of updating the GIS map of the entire water system by using Global Positioning System (GPS) techniques. .Drawing records are stored at the Public Works Facility and are maintained by the Public Works Department.

Operation and Maintenance Records

Records are stored at City Hall for the following items:

- Water usage
- Bacteriological tests
- Backflow and cross-connections
- SPU water quality monitoring reports
- Water sample reports from new developments and public water system projects
- Chlorination levels
- Water used for construction
- Hydrant repairs
- Precipitation
- Hydrant meter forms
- Water system maintenance
- Hydrant databases
- Confined spaces
- Vandalism forms
- Water consumable inventory
- Water main notes
- Water worksheets
- Customer complaints

Safety Procedures and Equipment

Safety is the concern and responsibility of all water operations and maintenance staff. To maintain the highest level of safety, the City has taken steps toward educating its staff and providing resources to ensure a safe working environment. The City will strive to improve its safety program on an on-going basis. The American Water Works Association publishes a manual entitled, Safety Practices for Water Utilities (M3), which describes safety programs and provides guidelines for safe work practices and techniques for a variety of water utility work situations. This manual is available to all department personnel. Safety training classes in First Aid, CPR, traffic safety and flagging, air testing, confined space entry and equipment calibration are required of all water department staff.

The following identifies procedures to be followed for operations and maintenance tasks that involve the most common potential work place hazards in the water system.

Use of Chlorine or Chlorine Products
Standard Procedure - Handle with care, provide adequate ventilation, wear safety glasses, rubber gloves and a self-contained breathing apparatus (SCBA).

Working in Confined Spaces
Standard Procedure - Follow state requirements for confined space entry.

Working in Trenches
Standard Procedure - Obtain proper training and follow all safety procedures for working in trenches.

Working Around Heavy Equipment
Standard Procedure - Obtain proper training and follow all safety procedures.

Working in Traffic Areas
Standard Procedure - Wear proper clothing and provide adequate signage and flagging for work area.

Working on or Around Water Reservoirs
Standard Procedure - Follow proper safety harness procedures for working on tall structures.

Working in or Around Pump Stations
Standard Procedure – Obtain proper training and follow all safety procedures for working on pumps and electrical equipment.

Working on Asbestos Cement (AC) Water Main
Standard Procedure – Obtain proper training and follow all safety procedures for working with asbestos materials.

Working on Pressurized Water Main
Standard Procedure – Obtain proper training and follow all safety procedures for working with pressurized water mains.

The following includes a list of safety and first aid equipment available to water department staff to carry out safety procedures for operations and maintenance tasks.

- First Aid kits in each department vehicle, workshop and lab.
- Eye wash stations in each facility.
- Self-contained breathing apparatus (SCBA) equipment for confined spaces.
- Trench shoring equipment.
- Air tester for confined spaces.
- Traffic safety equipment.
- Gas monitoring equipment.
- Radios and cell phones.
- Spill kits in each department vehicle, workshop, and lab.

The Public Works Department follows all appropriate OSHA and WISHA regulations in its day-to-day operations and complies with the following state requirements.

- WAC 296-809-500 - Entry into confined spaces.
- WAC 296-155-650 to 66411 Part N - Shoring of open ditches.
- WAC 296-155-429 - Lockout-tagout for work on energized or de-energized equipment or circuits.
- WAC 296-155 Part C1 - Fall restraint for access to the top of the City's water reservoirs.
- MUTCD - Traffic control for work in the public right-of-way.

Environmental Awareness Practices

Protecting the environment is a high priority of the City. The operations and maintenance staff have been made aware of the City's commitment to protecting the environment through education and field training. The City recognizes that it can play a major role in protecting the environment, due to its close proximity to the Snoqualmie River and other natural features. Chinook salmon and bull trout were listed as a threatened species under the federal Endangered Species Act (ESA) in 1999. The City has established practices to operate, maintain, repair, improve, and expand the water system in a manner that does not adversely affect the environment. For example, the City does not allow chlorinated water to enter surface water bodies or storm drainage systems that discharge to surface water bodies.

Security Measures

The City maintains security measures at all City water system facilities. These measures include fencing and located gates surrounding all water storage reservoir tanks and pumping facilities, screening of all reservoir tank vents and openings, locking of all reservoir tank hatches, and locking of all water system vaults.

RELIABILITY AND EMERGENCY OPERATIONS

Capabilities

The City has a reliable system with adequate emergency response and operations capabilities in accordance with WAC 246-290-420. The City system is designed to provide reliable service under normal operating conditions and is also well equipped to accommodate short-term system failures and abnormalities. Its capabilities are summarized in the following sections.

Reliable Quantity and Quality of Water

The City provides a level of reliability including water pressure, fire flow, and water quality for normal and abnormal operating conditions as described in **Chapter 5**. The means for achieving the level of reliability are summarized in this chapter.

Multiple Connections to the Tolt Pipeline

Should the City lose the operation of one connection, water could be routed throughout the City from the other Tolt connection. Such a failure would not adversely affect the City's ability to meet the water demands of its customers.

Multiple Reservoirs

Water storage is provided by two active reservoirs that are located at different sites. The duplication of reservoirs in separate pressure zones, coupled with the water system's ability to transfer water between zones through a series of pressure reducing stations and a booster pump station, provides sufficient redundancy to prevent service disruption when one of the reservoirs is out of service for cleaning, painting, or repairs.

Distribution System

The City has attempted to loop water mains, wherever possible, to improve water circulation (i.e. water quality) and minimize impacts to the system in the event that a portion of the distribution system must be taken out of service for maintenance or repairs.

Emergency Equipment

The City is equipped with the necessary tools to deal with common and serious emergencies associated with water main failures. If a more serious emergency should develop, such as a major weld rupture or collapse, the City will hire a local contractor to make repairs to alleviate the emergency condition. Additionally, the 615 Zone Booster Pump Station is equipped with a generator set that provides backup power to the facility during power outages.

Emergency Telephone

Key or "on-call" personnel can be reached by the City's internal phone system, individual cell phones, emergency pager, Police Department, Fire Department and 911.

On-Call Personnel

The on-call technician is equipped with a pager, cell phone, service vehicle and can respond to emergency calls within 30 minutes. A list of emergency telephone numbers is provided to each on-call employee. New employees are not placed on-call until they are familiar with the water system and maintenance procedures.

Material Readiness

Some critical repair parts, tools, and equipment are on-hand and kept in fully operational condition. As repair parts are used, they are re-ordered. Inventory is kept current and is adequate for most common emergencies, which can reasonably be anticipated. The City has access to an inventory of repair parts, including parts required for repair of each type and size of pipe within the service area.

Emergency Response Program

The City of Duvall Emergency Response Plan identifies procedures that would be carried out in the event of a serious emergency or disaster situation. The Emergency Response Plan also

contains a list of water personnel responsible for making decisions in emergency situations. A copy of this plan is stored securely at the Public Works Facility.

Restrictions on Water Use

The City provides reliable, clean water in sufficient quantities to satisfy the design requirements summarized in **Chapter 5**. Restrictions on water use shall only be allowed in the following situations and upon Public Notification as summarized in this chapter:

- Whenever there is clear evidence that, unless limitations are imposed, water use at normal levels will lead to a relatively rapid depletion of water source reserves, such as in drought situations or when significant facility failures occur;
- Whenever the City observes that demands for water exceed the available supply, as a result of such events as miscalculated planning, inattentive operation, or unforeseen problems with sources and that limitations would be necessary to insure basic levels of service while additional sources were being sought or developed, or the situation was being otherwise remedied; or
- Whenever the City institutes restrictions as part of a water use efficiency program which has been accepted by the system consumers through appropriate public decision-making processes within existing governance mechanisms, or has been mandated under state regulatory authority.

PREVENTIVE MAINTENANCE

Maintenance schedules that meet or exceed manufacturer's recommendations have been established for all critical components in the water system. The following schedule is used as a minimum for preventive maintenance:

Storage Facilities

Daily	Visual exterior inspection and audio (listening) inspection for anomalous flow.
Weekly	Check security and inspect facilities for proper operation.
3-Year Intervals	Detailed inspection of interior and exterior of reservoirs. Clean exterior of reservoirs as required.
As Needed	Repaint and repair interior and exterior as needed on tanks.

Distribution System

Water Mains	
Annually or As Needed	Leak survey.
Annually	Directional Flush.
Supply and Pump Stations	
Weekly during times of pump operation	Observe and record motor current draw (three phases); check packing; log and record volume delivered and pump motor hours; check motor oil level; measure and record discharge pressure; check motor noise, temperature, vibration.
Weekly	Check security.

Monthly during times when pump system is not utilized	Complete pump start-up check including supply shutdown and pump start-up and operation.
Annually	Take inventory of parts, pumps and motors.
Annually	Change motor oil.
As Needed	Calibrate flow meter; maintain electrical and mechanical equipment; paint structures and piping.
Engine Generator Sets	
Weekly	Operate to achieve normal operating temperatures; observe output.
As Needed	Replace fluids and filters in accordance with manufacturer's recommendations (or more frequently depending on amount of use).
As Needed	Perform tune-up; replace parts as necessary.
Pressure Reducing Stations	
Annually	Flush and check all valves and screens; check pressure settings; rebuild and paint every three years, or as necessary.
Isolation Valves	
Annually	Operate full open/closed; uncover where buried; clean out valve boxes and repair as necessary.
Hydrants	
Annually	Check for leakage and visual damage. Operate and flush; check drain rate; lubricate as necessary; measure and record pressure; paint as necessary. Check nozzle and cap threads, clean and lubricate per manufacturer's recommendations. Replace lost and damaged gaskets. Check and operate auxiliary valve in accordance with the valve maintenance schedule. Leave in open position. Inspect drain system to ensure proper drainage and protection from freezing.
Meters	
2-10 Year Intervals	Time and measure volume of meter-delivered flow; dismantle, clean, and inspect all parts, replace worn or defective parts; retest meter for accuracy. Frequency varies based on meter size.
Air and Vacuum Release Valve Assemblies	
Annually	Flush and inspect.
Blow-off Assemblies	
Annually	Flush and inspect.
Backflow Prevention Devices	
Annually	Inspect, record, and report status.
Telemetry and Control System	
Monthly	Visually inspect cabinets and panels for damage, dust, and debris.
Semi-Annually	Inspect inside of cabinets and panels for damage, dust, and debris.
Semi-Annually	Vacuum clean all modules.
Semi-Annually	Test alarm indicator units.
Semi-Annually	Clean and flush all pressure sensitive devices.
Semi-Annually	Visually inspect all meters to coordinate remote stations.
Annually	Check master and RTU's for proper operation; repair as necessary.

Tools and Equipment

Rolling Stock	
Daily	Check all fluid levels and brakes.
As Needed	Replace fluids and filters in accordance with manufacturer's recommendations (or more frequently depending on type of use).
Tools	
As Needed	Clean after each use; lubricate and maintain as necessary.

STAFFING

The preventive maintenance procedures, as well as the normal and emergency operations of the City, are described in the previous sections. The hours of labor and supervisory activity required to effectively carry out the work of these on-going maintenance and operations schedules form the basis for determining adequate staffing levels.

Current Staff

The current staff includes supervisory personnel, engineers, and maintenance workers engaged in operating and maintaining the water system. There are currently seven employees in the operations and maintenance organization that support the water system along with seven additional Public Works maintenance staff that assist with water system activities. Since these employees also support other City utilities, only a portion of their time is available for the water utility. The City currently has allocated approximately five (5.13) full-time staff equivalents to support the water utility.

Staffing Requirements

The estimated hours of work required to achieve optimum operation and maintenance of the water system (excluding time required for clerical tasks) is shown in **Table 7-4**. The upper section identifies the staffing time for preventive maintenance tasks and the lower section identifies the staffing time for operational tasks.

To achieve the level of operations and maintenance shown in **Table 7-4**, approximately 4.7 full-time staff equivalents are required for the water system alone. The City's current staff of five full-time water system personnel equivalents allows the utility to operate at an optimum level of operation and maintenance, as shown in **Table 7-4**. The City is capable of adequately operating the water system and complying with the requirements of DOH. The City will add staff as necessary to optimize preventive maintenance and meet additional requirements from system expansion as the budget allows.

Table 7-4
Staffing Requirements

Description	Total Units In System	Frequency (Times/Year)	Time/Unit (Hours)	Time/Year (Hours)
Preventive Maintenance				
Hydrants	346	1	0.5	173
Isolation Valves, Hydrant Valves	688	1	0.25	172
Air and Vacuum Release Valves	24	1	0.5	12
Blowoff Assemblies	40	1	0.25	10
Scheduled Meter Replacement	100	1	2	200
Leak Survey of Water Mains	36 miles	1	0.5	18
Flushing Water Mains	36 miles	1	4	144
Booster Pump Stations	1	2	12	24
Pressure Reducing Stations	15	1	4	60
Supply Stations	2	2	4	16
Reservoirs	2	1	16	32
Telemetry and Control System	1	2	8	16
Operations				
Monitor System	42	60	0.3	756
Meter Reading	2,276	12	0.1	2,731
Groundskeeping	2	12	6	144
Inventory	1	1	40	40
Meter Repair/Replace	20	1	2	40
Main Breaks	1	2	8	16
System Failures	1	4	16	64
Hydrant Repairs	5	1	8	40
Service Repairs	3	1	8	24
New Service Connections	12	1	2	24
Main Connections	5	1	16	80
Water Quality Testing	2	12	1	24
Telemetry and Control System	1	260	1	260
Administration	1	260	8	2,080
Total Requirements				
Total Hours Required				7,200
Total FTE's Required (based on 1,540 hours per year per person)				**4.7**
Time Availabe Per Year Per Person				
Beginning Hours Available				2,080
Less average vacation (3 weeks per year)				-120
Less average sick leave (2 weeks per year)				-80
Less holidays (11 days per year)				-88
Less average training (1 week per year)				-40
Less average small tasks (1 hour per day)				-219
Net Total Hours Available Per Person				1,533

OPERATIONS AND MAINTENANCE IMPROVEMENTS

The City completed telemetry and supervisory control improvements in the late 1990's that have enhanced the routine operation of the water system. Telemetry and supervisory control improvements allow the existing operations staff to concentrate on preventive maintenance, equipment repair, and the other specialized needs of the organization, while eliminating the "human factor" from routine tasks and increasing system efficiency and reliability. The telemetry system is currently undergoing repairs to re-establish its capabilities and assist staff in day-to-day functions. Other proposed improvements not mentioned above are addressed in **Chapter 9** and included in the City's Capital Improvement Program.

8

Water System Analyses

INTRODUCTION

This chapter presents the analysis of the City of Duvall's existing water system. Individual water system components were analyzed under both existing and future water demand conditions to determine their ability to meet policies and design criteria.

The City's policies and design criteria are presented in **Chapter 5** and the water demands are presented in **Chapter 4**. A description of the water system facilities and their current operation is presented in **Chapter 2**. Planned water system capital improvements that resolve the deficiencies identified in this chapter are presented in **Chapter 9**. The last section of this chapter presents the existing system capacity analysis that was performed to determine the maximum number of equivalent residential units (ERUs) that can be served by the City's water system.

PRESSURE ZONES

The ideal static pressure of water supplied to customers is between 40 and 80 psi. Pressures within a water system's distribution system are commonly as high as 120 psi, requiring pressure regulators on individual service lines to reduce the pressure to 80 psi or less. It is difficult for the City's water system and most others to maintain distribution pressures between 40 and 80 psi in all areas of the water system, primarily due to the topography of the water service area.

The upper portion of **Table 8-1** lists all of the City's existing pressure zones, the highest and lowest elevation served in each zone, and the minimum and maximum distribution system pressures within each zone, based on maximum static water conditions (i.e. full reservoirs and no system demands). The lower portion of the table lists the minimum and maximum distribution system pressure in each zone upon completion of the proposed pressure zone improvements, which includes removal of two existing pressure reducing stations that serve the 485 Zone and conversion of this small zone to the 555 Zone, as described in **Chapter 9**.

The City is currently providing water at sufficient pressures throughout the water system, as shown in the table. The highest pressures in the system occur at the lowest elevations of each pressure zone. All new water services with pressures greater than 80 psi must have individual pressure reducing valves to reduce the pressure to 80 psi or less, in accordance with the plumbing code.

Table 8-1
Minimum and Maximum Distribution System Pressures

Pressure Zone	Highest Elevation Served		Lowest Elevation Served	
	Elevation (feet)	Static Pressure (psi)	Elevation (feet)	Static Pressure (psi)
Existing System - Before Proposed Pressure Zone Improvements				
615 Zone	497	51	406	91
555 Zone	442	49	299	111
485 Zone	372	49	294	83
450 Zone	332	51	187	114
330 Zone	235	41	57	118
Future System - After Proposed Pressure Zone Improvements				
615 Zone	497	51	406	91
555 Zone	442	49	294	113
450 Zone	332	51	187	114
330 Zone	235	41	57	118

SUPPLY STATIONS

This section evaluates the City's Tolt 1 & 2 Supply Stations to determine if they have sufficient capacity to provide water supply to the system at a rate that meets the existing and future demands of the system.

Analysis Criteria

Supply facilities must be reliable and must provide a sufficient quantity of water at pressures that meet the requirements of WAC 246-290-230. The capacity of supply facilities in a pressure zone that has adequate storage must be sufficient to provide water at a rate that is equal to or greater than the peak day demand of the zone being served. This approach assumes that demands in excess of the peak day demand will be supplied from the equalizing storage portion of reservoirs. Since the City's Tolt Supply Stations provide supply to pressure zones that can also be supplied from storage for intraday peak demands, the supply requirement for the supply station is equal to the peak day demand of the system.

Analysis Results

The Tolt 1 Supply Station is the lead supply facility, delivering water directly into the 615 Zone, filling the Big Rock Road and Crestview Estates Reservoirs and indirectly supplying all other zones through pressure reducing stations. The Tolt 2 Supply Station operates on standby, delivering water directly to the 450 Zone and indirectly to other zones when system demands exceed the supply rate of the Tolt 1 Supply Station. The supply analyses are based on an evaluation of the existing supply facilities providing water to the system as a whole.

Table 8-2 summarizes the evaluation of the City's Tolt Supply Stations to determine if it has sufficient capacity to meet the existing and future demands of the system. The existing system

evaluation is based on 2009 supply requirements and current supply capacities of the facilities. The future water supply evaluation is based on projected 6-year and 20-year water system demands, the current supply capacity of the Tolt 1 Supply Station, and the planned expanded supply capacity of the Tolt 2 Supply Station.

The results of the evaluation, as shown in **Table 8-2**, indicate the City's Tolt Supply Stations have sufficient capacity to meet the existing and future supply requirements of the system through the year 2030 and beyond for both the average and maximum growth projections.

Table 8-2
Supply Station Capacity Evaluation

Description	Existing 2009	Average Projection[1] 2016	Average Projection[1] 2030	Maximum Projection[2] 2030
Required Source Capacity (gpm)				
Peak Day Demand	794	966	1,443	1,874
Available Source Capacity (gpm)				
Tolt 1 Supply Station	1,760	1,760	1,760	1,760
Tolt 2 Supply Station	1,200	1,760	1,760	1,760
Totals	2,960	3,520	3,520	3,520
Surplus or Deficient Source Capacity (gpm)				
Surplus or Deficient Amt.	2,166	2,554	2,077	1,646

1 = Average projections are based on growth within the City's UGA, excluding the urban reserve area.
2 = Maximum projections are based on growth within the City's UGA, including the urban reserve area.

Supply Reliability

The configuration of the existing system provides the City with the ability to supply all customers from one supply station in the event that the other supply station is out of service. Currently, each supply station is capable of providing adequate supply to individually meet the demand requirements of the existing system. The future water supply evaluation based on the maximum demand projection in 2030, as shown in **Table 8-2**, indicates that one supply station would not be capable of meeting the future demand requirements in the event that the other supply station is out of service. However, it is during this type of an event that standby storage is used to augment water supply to customers.

615 ZONE BOOSTER PUMP STATION

This section evaluates the 615 Zone Booster Pump Station to determine if it has sufficient capacity to meet the existing and future demands of the system.

Analysis Criteria

The primary purpose of the 615 Zone Booster Pump Station is to pump stored water from the 2.2 MG Big Rock Road Reservoir to maintain pressure in the 615 Zone and supplement supply from the Tolt 1 Supply Station during peak demand periods and if the Tolt 1 Supply Station is out of service. The pump station indirectly provides water supply to the 555 Zone and subsequently to

the 485 Zone. The Crestview Estates Reservoir, however, provides water storage for the 555 Zone, thus, fire flow and peak hour demands in excess of peak day demands are provided by the reservoir in these two zones. The pump station, therefore, is required to provide supply the 555 Zone at the peak day demand rate in addition to providing supply to the 615 Zone based on the zone's peak hour demand and fire flow supply requirements. Although the Tolt 1 Supply Station supplements the pump station's supply into the 615 Zone, this conservative analysis assumes that no supply is available from the Tolt 1 Supply Station.

Since the 615 Zone does not have storage facilities, the criteria for evaluating the capacity of the 615 Zone Booster Pump Station is based on the most stringent condition where the system is experiencing peak hour demands and a simultaneous fire flow in the 615 Zone, based on the largest fire flow requirement of 1,000 gpm in the 615 Zone with no flow available from the Tolt 1 Supply Station.

Analysis Results

Table 8-3 summarizes the total supply requirements of the 615 Booster Pump Station based on existing demands as well as average and maximum growth projections for year 2030 demand conditions. The table also shows the existing capacity of the 615 Zone Booster Pump Station.

Table 8-3
615 Zone Booster Pump Station Capacity Evaluation

Description	Existing	Average Projection[1]		Maximum Projection[2]
	2009	2016	2030	2030
Required Supply (gpm)				
615 Zone Peak Hour Demand	530	645	964	1,252
615 Zone Max. Fire Flow Demand[3]	1,000	1,000	1,000	1,000
Transfer to 555 Zone	242	295	440	572
Total Required Supply	1,773	1,940	2,405	2,824
Available Supply (gpm)				
615 Zone Booster Pump Station	2,000	2,000	2,000	2,000
Surplus or Deficient Supply (gpm)				
Surplus or Deficient Amt.	227	60	-405	-824

1 = Average projections are based on growth within the City's UGA, excluding the urban reserve area.
2 = Maximum projections are based on growth within the City's UGA, including the urban reserve area.
3 = Fire flow to 555 Zone provided by Crestview Estates Reservoir.

The results of the analysis indicate that the 615 Zone Booster Pump Station has sufficient capacity to meet the existing and 2016 demand conditions. However, the pump station will need between approximately 405 gpm and 824 gpm of additional capacity by 2030. Planned improvements to provide this additional capacity are identified in **Chapter 9**.

Supply Reliability

The 615 Zone Booster Pump Station has three pumps that provide water supply to the 615 Zone. The reliability of supply to the 615 Zone is achieved with the multiple pump arrangement and supply also being provided by the Tolt 1 Supply Station. The pump station is also equipped with

a stationary engine generator set equipped with an automatic transfer switch to enable operation of the station in the event of a power outage. The reliability of supply to the 615 Zone is sufficient and does not warrant additional improvements for this purpose.

STORAGE FACILITIES

This section evaluates the City's two existing water storage facilities to determine if they have sufficient capacity to meet the existing and future storage requirements of the system.

Analysis Criteria

Water storage is provided in public water systems for different purposes and is typically comprised of the following components: operational storage, equalizing storage, standby storage, fire flow storage, and dead storage. A description of each storage component and the criteria used to evaluate the capacity of the City's reservoirs is provided below.

Operational Storage

Operational storage is the upper portion of the reservoir that is used to supply the water system under normal demand conditions. Operational storage is the average amount of draw down in the reservoir during normal operating conditions, which represents a volume of storage that will most likely not be available for other purposes. The operational storage in both of the City's reservoirs is the volume of storage between the average water level of the reservoirs and the maximum water level (i.e., overflow elevation) of the reservoirs. The operational storage volume shown in **Tables 8-4** and **8-5** is from the sum of 80,000 gallons in the 0.5 MG reservoir based on an operating range of 9.5 feet and 760,000 gallons in the 2.2 MG reservoir based on an operating range of 6.8 feet.

Equalizing Storage

Equalizing storage is the portion of the reservoir below operational storage that is used to supply the water system under peak demand conditions when the system demand exceeds the total rate of supply of the sources. The criteria for determining the equalizing storage requirements for the City's system is based on an evaluation of diurnal demand data during a peak day demand event, which results in equalizing storage being 11.3% of the peak day demand.

Standby Storage

Standby storage is the portion of the reservoir used to supply the water system under emergency conditions when supply facilities are out of service. Considering the City's historically reliable supply from the Tolt Supply Stations, the City's standby storage requirement is based on a sufficient volume to provide all water supply to the system for one day during an average day demand condition when both Tolt Supply Stations are out of service. The standby storage volume shown in **Tables 8-4** and **8-5** is the product of the average day demand and 1440, representing average day demand over a 24-hour period.

Fire Flow Storage

Fire flow storage is the portion of the reservoir with sufficient volume to supply water to the system at the maximum rate and duration required to extinguish a fire at the building with the highest fire flow requirement. The volume of the fire flow storage is the product of the fire flow

rate and duration of the system's maximum fire flow requirement. The required volume of fire flow storage shown in **Tables 8-4** and **8-5** is the product of the maximum fire flow requirement of 3,500 gpm and its 3-hour duration.

Both standby storage and fire flow storage are considered emergency storage components. The City has elected to nest these two storage components, which results in only the larger of the two individual components being used in the required storage computation.

Dead Storage

Dead storage is the bottom portion of the reservoir that cannot be used because water is stored at an elevation that is too low to pump or flow by gravity to provide sufficient pressure. This unusable storage occupies the lower portion of many ground-level standpipe type reservoirs.

Analysis Approach

Similar to the supply facility analysis, the storage analyses are based on an evaluation of the existing reservoirs providing water to the system as a whole, since water from either reservoir may be utilized by any zone in the system through pressure reducing stations or the 615 Zone Booster Pump Station. The demands used in the evaluation of future storage requirements are future demand projections without reductions from conservation efforts, as shown in **Table 4-11** of **Chapter 4**.

Existing Storage Analysis Results

The results of the storage analysis for the existing system indicate that the existing storage facilities have sufficient capacity to meet existing demands, as shown in **Table 8-4**. The existing reservoirs have approximately 1.10 MG of excess storage for the system.

Table 8-4
Existing Storage Capacity Evaluation

Description	Existing System 2009
Available/Usable Storage	
Maximum Storage Capacity	2.70
Dead (Non-usable Storage)	0.00
Total Available Storage	2.70
Required Storage	
Operational Storage	0.84
Equalizing Storage	0.13
Standby Storage	0.52
Fire Flow Storage	0.63
Total Required Storage[1]	1.60
Surplus or Deficient Storage	
Surplus or Deficient Amt.	1.10

1. Total reflects nesting of standby and fire flow storage.

Future Storage Analysis Results

The future storage analysis was performed to determine the adequacy of the City's existing reservoirs to meet the future storage requirements, based on projected demands for years 2016 and 2030, as shown in **Table 8-5**.

Table 8-5
Future Storage Capacity Evaluation

Description	Average Projection[1]		Maximum Projection[2]
	2016	2030	2030
Available/Usable Storage			
Maximum Storage Capacity	2.70	2.70	2.70
Dead (Non-usable Storage)	0.00	0.00	0.00
Total Available Storage	2.70	2.70	2.70
Required Storage (MG)			
Operational Storage	0.84	0.84	0.84
Equalizing Storage	0.16	0.24	0.31
Standby Storage	0.63	0.94	1.23
Fire Flow Storage	0.63	0.63	0.63
Total Required Storage[3]	1.63	2.02	2.38
Surplus or Deficient Storage (MG)			
Surplus or Deficient Amt.	1.07	0.68	0.32

1. Average projections are based on growth within the City's UGA, excluding the urban reserve area.
2. Maximum projections are based on growth within the City's UGA, including the urban reserve area.
3. Total reflects nesting of standby and fire flow storage.

The demands used in the analysis are projected demands without reductions from conservation efforts. The results of the future storage analysis indicate that the existing storage facilities have sufficient capacity to meet the future demands of the system beyond the year 2030 under both growth scenarios.

DISTRIBUTION AND TRANSMISSION SYSTEM

This section evaluates the City's existing distribution and transmission mains to determine if the water pipelines are sized and looped adequately to provide the necessary flow rates and pressures to meet the existing and future requirements of the system.

Analysis Criteria

Distribution and transmission water mains must be capable of adequately and reliably conveying water throughout the system at acceptable flow rates and pressures. The criteria used to evaluate the City's distribution and transmission system is contained in WAC 246-290-230 Distribution Systems. The pressure analysis criteria states that the distribution system "…shall be designed with the capacity to deliver the design peak hour demand quantity of water at 30 psi under peak hour demand flow conditions measured at all existing and proposed service water meters". It

also states that if fire flow is to be provided, "… the distribution system shall also provide maximum day demand (MDD) plus the required fire flow at a pressure of at least 20 psi at all points throughout the distribution system".

Hydraulic Model

A computerized hydraulic model of the City's water system was used to evaluate the existing system and identify proposed improvements to resolve deficiencies. The hydraulic model was also used to evaluate the system to demonstrate that the proposed improvements will eliminate the identified deficiencies and meet the future demand requirements. A description of the hydraulic model and settings used for the analyses follows.

Description

The City's existing water system was modeled with InfoWater version 8.1, a GIS based modeling program developed by Innovyze. All existing facilities and water mains in the City's water system were modeled, including recent improvements.

Demand Data

The hydraulic model contains average day demands of the existing system, based on 2009 demand data. A global demand factor was used to adjust the demands to reflect future demand levels. Demand peaking factors from **Chapter 4** were used to adjust demand levels to peak day demand for the fire flow analyses and peak hour demand for the pressure analysis.

Facility Data

The hydraulic model of the existing system for the pressure analyses contains all active existing system facilities with settings that correspond to peak hour demand conditions. The Tolt supply stations operated at their normal set points. The 615 Zone Booster Pump Station was modeled with one pump operating. The reservoir levels were modeled to reflect full utilization of operational and equalizing storage. All active pressure reducing stations were modeled as being in service and operating at their normal set points.

The hydraulic model of the existing system for the fire flow analyses contains all active existing system facilities with settings that correspond to peak day demand events. The Tolt supply stations operated at their normal set points. The 615 Zone Booster Pump Station was modeled with the two large pumps operating. The reservoir levels were modeled to reflect full utilization of operational, equalizing, and fire flow storage. Fire flow storage for the 330 Zone, 450 Zone and 615 Zone, based on the maximum fire flow requirement in these zones of 3,500 gpm for 3 hours, or 630,000 gallons, was provided by the 450 Zone Big Rock Road Reservoir. Fire flow storage for the 555 Zone, based on the maximum requirement of 1,750 gpm for 2 hours, or 210,000 gallons, was provided by the 555 Zone Crestview Estates Reservoir. All active pressure reducing stations were modeled as being in service and operating at their normal set points.

The hydraulic model of the proposed water system in the year 2030 contains all active existing system facilities and planned improvements identified in **Chapter 9**. The settings for all active existing and proposed facilities were set to correspond to the future peak day demand events for

the fire flow analysis of the proposed water system. Otherwise, facility settings were the same as in the existing system analyses.

Calibration

Hydraulic model calibration is the process of using field pressure and flow data to improve the accuracy of the hydraulic model so that it can be used to accurately simulate operation of the actual water system. Initial calibration was accomplished by adjusting water main roughness coefficients based on a compilation of pipe material and year data. Additional calibration of the model was achieved using field flow and pressure data, which was collected from flow tests that the City performed throughout the system for this purpose. Detailed calibration data and information is available in Appendix D of this plan.

Hydraulic Analyses Results

Several hydraulic analyses were performed to determine the capability of the system to meet the pressure requirements identified in WAC 246-290-230 and planning level fire flow requirements identified in **Chapter 4**. The first analysis was performed to evaluate pressures throughout the system under existing (i.e., 2009) peak hour demand conditions. The results of this analysis were used to identify locations of low and high pressures. To satisfy the minimum pressure requirements, the pressure at all water service locations must be at least 30 psi during these demand conditions. The results of this analysis indicated that all areas of the system have pressures greater than 30 psi under peak hour demand conditions.

Fire flow analyses were performed throughout the system to determine the capability of the existing water system to provide adequate fire flow under peak day demand conditions. An individual fire flow analysis was performed for each node in the hydraulic model to determine the available fire flow while maintaining a minimum residual pressure of 20 psi throughout the system. For each node analyzed, the resulting fire flow was compared to its target fire flow requirement, which was assigned according to the zoning classification that it is located within, as summarized in **Table 4-10**.

The results of the fire flow analyses were used to identify improvements for water mains that are undersized or not looped adequately to provide sufficient fire flow. Upon completion of the existing system fire flow analyses, proposed water main improvements were included in the model and fire flow analyses were performed throughout the system to confirm that the improvements eliminate the existing system deficiencies and meet the future requirements of the system. These analyses were modeled under future year 2030 maximum demand conditions without planned reductions from conservation to ensure that the improvements are sized sufficiently to meet the largest demands anticipated in the future.

A summary of the results of the analyses for representative locations in the system that exhibit increased fire flow as a result of the planned improvements is shown in **Table 8-6**. These results show that fire flows are significantly increased with the planned water main improvements. A description of the planned improvements and a figure that shows their location is presented in **Chapter 9**. A detailed list of each node and the modeling results is included in Appendix D of this plan.

Table 8-6
Fire Flow Analysis Summary

Approximate Location	Pressure Zone	Node Number	Available Fire Flow (gpm)		Target Fire Flow (gpm)
			Existing System	Future w/Improvements	
NE Kennedy Dr & Dougherty Place NE	450	J55	880	1,560	1,000
NE Stella St & 2nd Ave NE	330	J511	2,800	3,560	3,000
NE 143rd St & west of 3rd Ave NE	330	J1074	2,125	3,010	3,000
1st Ave NE & NE Richardson St	330	J1246	1,390	3,900	3,000
NE Stephens St & Railroad Ave NE	330	J1580	1,565	3,570	3,000
1st Ave NE & NE Stella St	330	J1575	1,565	3,570	3,000

PRESSURE REDUCING STATIONS

Since 2004, the City has abandoned several older pressure reducing stations as part of water main looping projects. The City's pressure reducing stations are maintained per the manufacturer's recommendations and are generally in good condition. The two existing pressure reducing stations that serve the 485 Zone will be removed in the future as part of the planned project to convert this small zone to the 555 Zone, as described in **Chapter 9**.

TELEMETRY AND SUPERVISORY CONTROL SYSTEM

The City's existing telemetry and supervisory control system was installed in approximately 1997 and has not been upgraded since that time. Planned improvements to the system are described in **Chapter 9**. The completed improvements will provide data collection and alarm notification at all facilities, and increased functionality and efficiency in system operation.

SYSTEM CAPACITY

System capacity analyses were performed to determine the maximum number of equivalent residential units (ERUs) that the system can serve, based on an independent evaluation of each component of the City's water system (supply, storage, transmission). A separate analysis was performed for the existing system with 2009 demand levels and the future system with the year 2030 maximum projection demand levels. The results of these analyses provide the City with information to ensure sufficient capacity is available when reviewing applications for new connections to the water system and to assist in the scheduling of planned improvements that will increase supply, storage, or transmission capacity.

Analysis Criteria

The physical capacity of the City's water system and ability to serve additional customers is based on the limiting capacity of supply, storage, or transmission, whichever facility has the least capacity. The capacity analysis for supply was computed from the Tolt Supply Stations capacity and the system's peak day demand per ERU. The capacity analysis for storage was computed from the total usable capacity of the storage facilities and the storage requirement per ERU. The

storage requirement per ERU was determined from the existing storage requirement presented in this chapter and existing ERUs presented in **Chapter 4**. The capacity analysis for transmission was computed from the total capacity of the transmission system for the two supply stations and the system's peak day demand per ERU. The ERU-based demand data was derived from the average day demand of the system and demand peaking factors from **Chapter 4**.

System Capacity Analysis Results

The results of the system capacity analysis, as shown in **Table 8-7**, indicate that the existing system has sufficient capacity to serve an additional 1,739 ERUs and the future system in the year 2030 with maximum demand projections will have sufficient capacity to serve an additional 841 ERUs. Storage capacity is the limiting factor of the system for both years, as shown in the table.

Table 8-7
System Capacity Analysis

Description	Existing 2009	Maximum Projection 2030
Demands Per ERU Basis		
Average Day Demand Per ERU (gal/day)	196	196
Peak Day Demand Per ERU (gal/day)	431	431
Peak Hour Demand Per ERU (gal/day)	776	776
Supply Capacity		
Limiting Supply Capacity (gal/day)	4,262,400	5,068,800
Peak Day Demand Per ERU (gal/day/ERU)	431	431
Maximum Supply Capacity (ERU's)	9,885	11,755
Storage Capacity		
Maximum Storage Capacity (gal)	2,700,000	2,700,000
Storage Requirement Per ERU (gal/ERU)	632	378
Maximum Storage Capacity (ERU's)	4,271	7,141
Transmission Capacity		
Limiting Transmission Capacity (gal/day)	4,262,400	5,068,800
Peak Day Demand Per ERU (gal/day/ERU)	431	431
Maximum Transmission Capacity (ERU's)	9,885	11,755
Maximum System Capacity		
Based on Limiting Facility - Storage	4,271	7,141
Unused Available System Capacity		
Maximum System Capacity (ERU's)	4,271	7,141
Future ERUs (2030 Maximum Projection)	2,533	6,300
Unused Available System Capacity (ERU's)	1,739	841

9

Water System Improvements

INTRODUCTION

This chapter presents water system improvements that the City plans to implement within the 20-year planning period to resolve existing system deficiencies and meet the future demands of the water system. The water system improvements were identified from the results of the water system analyses presented in **Chapter 8** and have been sized to accommodate the projected demands shown in **Chapter 4**. This chapter also presents criteria used for prioritizing the capital improvements, planning level project cost estimates, and an implementation schedule for the improvements.

DESCRIPTION OF IMPROVEMENTS

A Capital Improvement Program number, herein referred to as a CIP number, has been assigned to each improvement identified within this plan. The projects were grouped with respect to project type and assigned a letter and number according to project type, as shown in **Figure 9-1**, a plan view of the improvements. The improvements are organized and presented in this chapter according to the following project type categories:

- Water System Improvements Completed Since Last Water System Plan in 2004
- Water System Improvements Identified in this Plan
    - Water Main Replacements
    - Water Main Looping
    - Pressure Reducing and Pressure Relief Stations
    - City-wide Programs
    - Developer Improvements
    - Facility Improvements

Water System Improvements Completed Since 2004

The water system has changed since the last Comprehensive Water System Plan update in 2004. The City has implemented a majority of the recommended projects from the 2004 Capital Improvement Plan (CIP). Some notable improvements include improved water main looping and abandonment of four PRV stations, installation of three pressure relief stations, and replacement of thousands of feet of asbestos cement pipe. The City's most recent project included the replacement of 3,300 lineal feet of 10-inch diameter asbestos cement pipe with new 12-inch

diameter ductile iron pipe in 3rd Avenue NE. This project and other water system improvements completed since 2004 are summarized in **Table 9-1** below. The 2004 Annual Water Main Replacement Program (WM1) CIP included a prioritization table of the 28 identified water main replacement projects. A total of 19 of the 28 were completed during the 2004 to 2010 period as summarized in **Table 9-2**,

Table 9-1
Water System Improvements Completed Since 2004

2004 CIP	Description	Year
WM1	Annual Water Main Replacement (see Table 9-2 for details)	2004-2010
WM3	12-inch Water Main in 3rd Avenue NE from NE Park Street to NE Big Rock Road *(partially completed between NE Park Street and NE 144th Place)*	2010
WM4	8-inch and 12-inch Water Main in 3rd Avenue from NE Virginia Street to NE Park Street (*partially completed from NE Stephens Street to NE Park Street*)	2010
PRV1	Installed Three Pressure Relief Facilities	2010
PRV2	3rd and Stewart (450/330 Zone) PRV Abandonment	2006
PRV3	3rd and Cherry (450/330 Zone) PRV Abandonment	2006
PRV4	3rd and Stella (450/330 Zone) PRV Abandonment	2008
PRV5	NE Park Street (450/330 Zone) PRV Abandonment	2010
F2	Crestview Estates Reservoir Recoating *(exterior only)*	2006
Developer	River Ridge Development	2009
Developer	Cottonwood Development	2008
Developer	Kaelin's Gate Subdivision	2008
Developer	Fox Hollow Subdivision	2008
Developer	Tuscany Hills Subdivision	2007
Developer	Clay (Skyline Heights) Subdivision	2007
Developer	Duvall Family Life Center	2007
Developer	Stone Ridge	2006
Developer	Fawn Meadows	2005
Developer	Sierra (Evans Pond)	2005
Developer	Cherry Hill Vista	2005
Developer	Brightmoor (Herons Cove)	2004
Developer	Arborwood	2004

Table 9-2
Annual Water Main Improvements (CIP WM1) Completed Since 2004

#	Size		Description			Year Constructed	Priority
	Length (ft)	Diam. (in)	In	From	To		
2	1,720	12" DI	~2nd Avenue NE	NE Virginia St.	NE Cherry Valley Rd	2008	H
5	559	8" DI	NE Bird	Main St NE	2nd Ave NE	2006	L
6	276	8" DI	1st Ave NE	NE Virginia St.	NE Bird St	2006	L
7	1,360	12" DI	Main St NE (Main Street Project)	NE Stephens St.	NE Bird St.	2009	H
8	660	8" DI	NE Stewart St	3rd Ave NE	4th Ave NE	2006	H
9	1780	8" DI	NE Stewart St (includes 3rd Ave Loop to Cherry)	Main St NE	3rd Ave NE	2006	M
10	830	8" DI	NE Cherry Street	3rd Ave NE	4th Ave NE	2007	H
11	1,750	8" DI	NE Cherry Street	Main St NE	3rd Ave NE	2007	H
13	380	8" DI	NE Stella Street	1st Ave NE	2nd Ave NE	2007	M
14	380	8" DI	NE Stella St (Main Street Project)	Main St NE	Railroad Ave	2009	H
16	1,130	8" DI	2nd Avenue NE	NE Stephens St	NE Park St.	2009	M
17	1,120	8" DI	NE Ring St	1st Ave NE	3rd Ave NE	2009	H
18	1,120	8" DI	NE Richardson St.	1st Ave NE	3rd Ave NE	2009	M
19	1,100	8" DI	NE Valley St	1st Ave NE	3rd Ave NE	2009	M
20	700	8" DI	NE Park St.	2nd Ave NE	3rd Ave NE	2009	H
22a	1,040	8" DI	278th Ave. NE (615 Zone)	NE 144th St.	NE 148th Pl.	2007	L
22b	1,020	8" DI	278th Ave. NE (555 Zone)	NE 145th Pl.	NE 150th St	2007	L
25	1,480	8" DI	NE 145th St	3rd Ave NE	144th PRV	2008	L
26	1,350	12" DI	NE 143rd Place	NE Main St	265th Ave NE	2007	M

New Water System Improvements

The water system improvements identified from the results of the distribution and transmission system analyses in **Chapter 8** are listed in **Table 9-3**. The table also includes a brief description of each improvement and the deficiency that it will resolve. Most of the improvements are necessary to resolve existing system deficiencies. The locations of improvements are shown in **Figure 9-1** and schematically in **Figure 9-2**.

Table 9-3
Capital Improvement Program Projects

Group	ID	Project Location or Name	Project Limits	Existing Deficiency	Proposed Improvement	Length (feet)	Total Project Cost ($1,000s) Estimated [1]
WATER MAIN REPLACEMENT	R1	Stella Street	3rd Ave to 4th Ave	There is outdated, undersized, and underperforming 4" AC main in this area.	This project will replace the existing main with new 8-inch DI main improving capacity and reliability.	970	$255
	R2	NE Stella Street	2nd Ave NE to 3rd Ave NE	There is outdated, undersized, and underperforming 4" AC main in this area.	This project will replace the existing main with new 8-inch DI main improving capacity and reliability.	650	$171
	R3	NE Kennedy Drive	Dougherty Place to 4th PL	There is outdated, undersized, and underperforming 4" and 6" AC main in this area.	This project will replace the existing main with new 8-inch DI main improving capacity and reliability.	655	$173
	R4	Tolt 2 Supply Line	NE Big Rock Rd. to Tolt 2 Supply Station	The existing transmission main is constructed of aging 10-inch asbestos-cement pipe, is undersized to meet future system needs, and is located within an easement that is difficult to access for maintenance and repairs.	This project will replace the existing water main with a new 12-inch ductile iron, or High Density Polyethylene (HDPE) water main along 274th Avenue NE from NE Big Rock Road to the Tolt 2 Supply Station. The new pipe will increase system capacity for future growth and improve the reliability of this vital transmission line. Horizontal Directional Drilling or other non-standard installation method may be required because of sensitive areas at the site.	2745	$1,854
	R5	Bruett Road	3rd Ave NE to 3rd PL NE	AC water main replacement	This project will replace the existing 8-inch AC piping with new 12-inch along Bruett Road and 8-inch DI water main from Stephens St to Stella St	850	$242
	R6	1st Ave NE	NE Stephens Street to NE Valley Street	Insufficient looping, flow, and water quality	This project will replace the existing undersized water main with a new 8-inch ductile iron, or HDPE water main along 1st Ave NE from NE Valley St to NE Ring St. The new pipe will improve flow and water quality in the area.	830	$219
WATERMAIN LOOPING	L1	NE 272nd	NE 144th St. to NE 143rd PL	Dead ends with insufficient looping, flow, and water quality	This project will install 8-inch DI looping to improve zone circulation and decommission the 555/450 Zone PRV at 143rd/272nd	1040	$301
	L2	3rd Ave NE	NE 143rd to Big Rock Road	Dead ends with insufficient looping, flow, and water quality	This project will loop the 330 Zone with 12-inch DI from NE 143rd Pl to Big Rock Road and abandon the 450/330 Zone PRV located on NE 143rd Pl.	3140	$1,045
	L3	Batten Road NE	NE 140th PL to NE Big Rock Road	Dead ends with insufficient looping, flow, and water quality	This project will install 12-inch DI looping to improve flow and water quality to the area.	5020	$1,627
	L4	NE Stephens Street	Main Street NE to Railroad Avenue NE	Dead ends with insufficient looping, flow, and water quality	This project will install 12-inch DI looping to improve flow and water quality to the area.	345	$112
	L5	1st Avenue NE	NE Virginia Street to NE Stephens Street	Dead ends with insufficient looping, flow, and water quality	This project will install 8-inch DI looping to improve flow and water quality to the area.	1230	$324
	L6	266th PL NE	NE 143rd Place to 266th Circle NE	Dead ends with insufficient looping, flow, and water quality	This project will install 8-inch DI looping to improve flow and water quality to the area.	300	$80
PRV	PRV1	485 Zone	485 Zone	Insufficient looping and dead end zone	Remove 555/485 PRV's on NE Big Rock Road and 275th Ave NE to convert 485 Zone to 555 Zone and reconfigure existing NE Big Rock Road/275th Ave NE pressure relief station to a 555/450 PRV.	40	$135

Table 9-3 (Continued)
Capital Improvement Program Projects

Group	ID	Project Location or Name	Project Limits	Existing Deficiency	Proposed Improvement	Length (feet)	Total Project Cost ($1,000s) Estimated [1]
Citywide Programs	CW1	Conservation and Leak Detection	System Wide over 20 year plan	On-going required conservation and leak detection	This task involves the City continuing its water main replacement program to reduce the amount of older and potentially leaking water mains; while also implementing a comprehensive leak detection/water main repair program to reduce the amount of unaccounted-for water. The City will perform other ongoing conservation measures, including public education programs, as outlined in the Water Conservation Plan included in Appendix F. Several water conservation measures must also be carried out on an ongoing basis to comply with State conservation requirements.	NA	$170
	CW2	Water Reclamation	System Wide over 20 year plan	On-going required water reclamation evaluation and improvements	This task involves the ongoing review of the potential uses of the City's Wastewater Treatment Plant effluent for irrigation and other non-potable applications throughout the City. Treated water produced at the City's Wastewater Treatment Plant may provide an opportunity for the City to use reclaimed water to supplement existing water supply from SPU for irrigation and other non-potable applications.	NA	$100
	CW3	Cross Connection Control	System Wide over 20 year plan	On-going required cross-connection evaluation and improvements	This task involves the expansion of the program from high risk premises and to include low and medium premises also. The program will be expanded based on potential risk to the water system and budget availability. The City has an updated ordinance, facility risk inventory, and cross-connection control program that meets current Washington State requirements for potential high risk cross-connections premises. The City will carry out other cross-connection control program requirements as outlined in the Cross-Connection Control Program.	NA	$100
	CW4	Comprehensive Plan	System Wide over 20 year plan	On-going required comprehensive plan updates	This task involves the update of the Comprehensive Water System Plan every six years to meet the requirements that are in effect at the time of the update. WAC 246-290-100 requires the City to update its Comprehensive Water System Plan every six years and submit to the Department of Health for review and approval. Drinking water regulations are continuously changing and must be addressed in the City's Comprehensive Water System Plan.	NA	$450
Developer Improvements	D1	272nd Place NE	NE Kennedy St. to NE Miller St.	Water line dead ends resulting in poor quality and circulation, and lack of service	Install 8-inch DI looping to provide service and improve zone circulation as part of private development. Decommission PRV at NE Miller St/272nd Ave NE	1010	$293
	D2	272nd Place NE	NE 143rd to Big Rock Road	Water line dead ends resulting in poor quality and circulation, and lack of service	Install 12-inch DI looping to provide service and improve zone circulation as part of private development.	2100	$680
	D3	1st Ave	NE 145th St. to NE 143rd PL	Water line dead ends resulting in poor quality and circulation, and lack of service	Install 8-inch DI looping to provide service and improve zone circulation as part of private development.	1010	$266
	D4	NE 154th Street	267th Ave NE to 268th Ave NE	Water line dead ends resulting in poor quality and circulation, and lack of service	Install 8-inch DI looping to provide service and improve zone circulation as part of private development.	3800	$1,000
	D5	275th Ave NE	NE 155th Ave, Manion Way NE, City Limits, 271st Ave NE	Water line dead ends resulting in poor quality and circulation, and lack of service	Install 12-inch DI looping to provide service and improve zone circulation as part of private development. Revise 555 Zone to extend to 271st Ave NE/NE Stewart Street. Install normally closed valves at 450 and 330 Zone connections. Separation between zones shall include closed valves, PRV's, or dead-end mains as determined by an evaluation of the existing system and proposed development to be completed prior to annexation and preliminary plat approval.	5020	$1,627
	D6	Main Street NE	NE Bird Street to NE Beadonhall Street	Water line dead ends resulting in poor quality and circulation, and lack of service	Install 12-inch DI looping to provide service and improve zone circulation as part of private development.	360	$116
	D7	NE 143rd	3rd Ave NE to 272nd Place NE	There is outdated, undersized, and underperforming 6" AC main in this area.	This project will replace the existing main with new 8-inch DI main improving capacity and reliability.	1400	$369
	D8	3rd Avenue NE	NE 144th PL to Big Rock Road	The existing 450 Zone transmission main is constructed of aging 10-inch asbestos-cement pipe, is undersized to meet future system needs, and is located within an easement that is difficult to access for maintenance and repairs. Approximately 75% of improvement to be completed by development.	This project will install a new 12-inch ductile iron water main along 3rd Avenue NE from NE 144th Place to NE Big Rock Road and abandon the existing 10-inch asbestos cement water main that traverses this area. The project will increase system reliability and capacity.	1405	$455

Table 9-3 (Continued)
Capital Improvement Program Projects

Group	ID	Project Location or Name	Project Limits	Existing Deficiency	Proposed Improvement	Total Project Cost ($1,000s) Estimated [1]
Facilities	F1	Taylors Landing Well Study	Taylors Landing Well	Insufficient Monitoring	The Taylor's Landing Well must be monitored to ensure the well's water supply is properly protected. This task includes ongoing monitoring, testing and additional wellhead protection efforts at the Taylor's Landing Well.	$100
	F2	Reservoir Seismic Evaluation, Recoat, and Improvements or rebuild	0.5 MG Reservoir	The reservoir was constructed in 1988 and may not have sufficient restraint to withstand seismic events.	This task would conduct a seismic evaluation to determine the reservoir's ability to withstand a seismic event and identify required seismic improvements. Seismic improvements would then be constructed at the reservoir, based on the results of the seismic evaluation. If significant seismic improvements are warranted the City will consider rebuilding a seismically resistant, larger reservoir at this location to provide additional required storage. Since the amount of, if any, seismic improvements won't be known until completion of the seismic evaluation, the preliminary cost estimate shown in the table is provided for budgetary purposes only and will need to be adjusted at the proper time in the future. This project also includes a reservoir recoat.	$531
	F3	Reservoir Re-coating	2.2 MG Reservoir	Based on the typical life of coatings on steel reservoirs it is estimated that the interior and exterior of the reservoir will need to be recoated every 15 to 20 years.	This task involves regularly inspecting the condition of the interior and exterior coating and recoating, as needed. It is anticipated that the reservoir will need to be recoated sometime between 2011 and 2015. Thoroughly inspect and sample the interior and exterior reservoir coatings approximately one year prior to the commencement of the project to determine the properties of the existing coating and extent of required recoating.	$682
	F4	Inlet / Outlet Improvements and reservoir seismic evaluation and Improvements	2.2 MG Reservoir	The reservoir currently has a single inlet/outlet pipe for flow into and out of the reservoir, which prevents optimum turnover and water quality. The lack of turnover in the reservoir and potential for loss of chlorine residual, forces the reservoir to operate at a low level, which prevents full utilization of its available storage capacity. In addition, the reservoir may not have sufficient restraint to withstand seismic events.	This project would construct inlet/outlet improvements to improve water turnover within the reservoir, which would enable the City to operate it at higher levels and provide a larger volume of usable storage. Implementation of this improvement will increase the amount of available storage, which in turn enables the City to serve a larger number of new connections, since storage is the limiting facility in the City's water system, as shown in the capacity analysis in Chapter 8. This project would also conduct a seismic evaluation to determine the reservoir's ability to withstand a seismic event and identify required seismic improvements. Seismic improvements would then be constructed at the reservoir, based on the results of the seismic evaluation. Since the amount of, if any, seismic improvements won't be known until completion of the seismic evaluation, the preliminary cost estimate shown in the table is provided for budgetary purposes only and will need to be adjusted at the proper time in the future.	$500
	F5	Pump Station Improvements	2.2 MG Reservoir	Insufficient pumping capacity in the 615 Zone as a result of future growth.	As a result of future anticipated growth the 615 Zone Pump Station will eventually have insufficient supply capacity to meet the demands of the 615 Zone. It is anticipated that the deficiency will occur sometime between the years 2016 and 2030. This project would increase the capacity of the pump station by adding a fourth pump in the available pump bay and replacing one or more of the other three pumps, as necessary; to optimize the operation of the pump station for meeting the future increased demand of the 615 Zone. The pump improvements will also require improvements to the electrical system and modifications to the telemetry and control system. The sizing of the pump and electrical improvements will be accomplished during the preliminary design phase of the project. The capacity of the pump station will need to be increased by as much as 825 gpm to meet the 615 Zone demands in the year 2030. However, since the need for the improvement depends on the timing and amount of development in the 615 Zone, it is prudent to evaluate the 615 Zone supply requirements every few years.	$200
	F6	Supply Station Improvements	Tolt 1	Currently the source tap and meters are undersized and the supply station lacks pressure sensors upstream and downstream side of the control valves to enable sufficient monitoring of pressures through the telemetry system and optimum control of the station. The station also lacks reliable drainage and the piping may need to be upsized.	This project would increase the tap diameter and metering at the SPU source. The project will also install pressure sensors on the upstream and downstream side of the control valves and integrate supply station pressure data into the telemetry and control system, as well as provide improvements to adequately drain the existing vaults. Additionally, the sump pump in the existing vaults does not operate properly, which typically leads to standing water in the bottom of the vaults. The SPU tap and meter will be upsized, if required.	$278
	F7	Supply Station Improvements	Tolt 2	Currently the source tap and meters are undersized and the supply station lacks pressure sensors upstream and downstream side of the control valves to enable sufficient monitoring of pressures through the telemetry system and optimum control of the station. The station also lacks reliable drainage and the piping may need to be upsized.	This project would increase the tap diameter and metering at the SPU source. The project will also install pressure sensors on the upstream and downstream side of the control valves and integrate supply station pressure data into the telemetry and control system, as well as provide improvements to adequately drain the existing vaults. Additionally, the sump pump in the existing vaults does not operate properly, which typically leads to standing water in the bottom of the vaults. The SPU tap and meter will be upsized, if required.	$262

Table 9-3 (Continued)
Capital Improvement Program Projects

Group	ID	Project Location or Name	Project Limits	Existing Deficiency	Proposed Improvement	Total Project Cost ($1,000s) Estimated (1)
Facilities	F8	Telemetry and Control Improvements	System Wide	The existing system is difficult to operate, requires too much manual intervention, and is not optimized. The existing telemetry system is not fully operational and is not currently setup to provide data collection and alarm notification at all facilities.	This project would provide modifications to the existing system operations to enable a more simplified, automated control of the water system facilities with reduced operations costs. It would modify the control valves at the supply stations and reservoirs, as necessary, to enable a more automated and efficient operation of the system during two different operational scenarios: 1) during low water usage periods to optimize turnover in the reservoirs; and 2) during the summer demand metering periods to maintain steady supply station flow rates to avoid demand surcharges from Seattle Public Utilities (SPU). Modifications to the telemetry and supervisory control system will also be required to incorporate these water system operation modifications and to provide full data collection and alarm notification at all facilities. These improvements should be implemented in conjunction with or following the completion of CIP F6 and F7	$345
	F9	Meter Removal	Mobile Home Park	The water meters were originally installed years ago to meter total water usage within the Duvall Highlands mobile home park, but are no longer needed since individual meters have been installed for all mobile homes.	This task involves removing the existing meters located at the two entrances to the Duvall Highlands mobile home park, located near the intersection of NE 142nd Street and 282nd Place NE, and just south of the intersection of NE 144th Street and 280th Avenue NE. The mainline meters permit flow in one direction only, thereby reducing the available flow and water quality in the area.	$10

(1) "Total Project Cost" is estimated project cost presented in 2011 dollars.

The water system improvements are grouped into the following project type categories: Water Main Replacements (CIP R1 – R6), Water Main Looping (CIP L1 - L6) Pressure Reducing and Pressure Relief Facilities (CIP PRV1), City-wide Programs (CIP CW1 – CW4), Developer Improvements (CIP D1 – D8), and Facility Improvements (CIP F1- F9).

PROJECT COST ESTIMATES

Project costs were estimated for each of the planned improvements and are presented in 2011 dollars. The planning level project cost estimates include the estimated construction cost and indirect costs. The construction cost estimate portion includes all construction related costs, sales tax and a 10 percent contingency. The indirect cost portion is estimated at 35 percent of the construction cost and includes engineering (preliminary design, final design, and construction management services), surveying, permitting, legal, and administrative services.

Water Main Cost Estimates

Construction costs for water main projects were estimated using the water main unit costs (i.e., cost per foot length) shown in **Table 9-4**. The unit cost of construction for each water main size is based on estimates of all construction-related improvements, which include materials and labor for the water main installation, water services, fittings, valves, connections to the existing system, trench restoration, asphalt surface restoration, and other work for a complete installation. The indirect cost component is not included in the water main unit costs.

Table 9-4
Water Main Unit Costs for Construction

Water Main Diameter (inches)	Construction Cost per Foot Length (2011 $$/LF)
8	$195
12	$240

PRIORITIZING IMPROVEMENTS

The planned improvements were prioritized using established criteria to help guide the City with scheduling and budgeting water system improvement projects in future years. A description of the criteria is provided below.

Prioritizing Water Main Improvements

Table 9-5 shows the criteria used for prioritizing the water main improvements. The criteria are based on the existing water main deficiencies, as determined by the categories shown in the table. Each category is assigned a weight factor that reflects the relative importance of each category compared to the others. The *Existing Water Main Fire Flow Capability* category ranks the water main improvements based on the ability of the existing water mains to provide the required fire

flow, as determined from the results of the hydraulic analyses presented in **Chapter 8**. The *Existing Water Main Year of Installation* and *Existing Water Main Material* categories rank the water main improvements based on the existing pipe age and material. The *Existing Water Main Benefit Area* category ranks the water main improvements based on the size of the area that will benefit from the water main improvements.

The water main priority ranking criteria was applied to each water main improvement project, which resulted in a total ranking score for each project. The results of the priority ranking are summarized in **Table 9-6**. **Table 9-7** presents the results in an order that is sorted according to total ranking points.

Table 9-5
Water Main Improvements Priority Ranking Criteria

Points	Category	Weight Factor	Weighted Points
	Existing Water Main Fire Flow Capability		
3	Available Fire Flow is 69% or Less of Target Fire Flow	4	12
2	Available Fire Flow is 70% to 80% of Target Fire Flow	4	8
1	Available Fire Flow is 81% to 100% of Target Fire Flow	4	4
	Existing Water Main Year of Installation		
3	Before 1960	3	9
2	1960 - 1980	3	6
1	1980 & after	3	3
	Existing Water Main Material		
3	Asbestos Cement	2	6
2	Galvanized Iron, Steel, or Cast Iron	2	4
1	PVC or Ductile Iron	2	2
	Existing Water Main Benefit Area		
3	Large Benefit Area (i.e., Transmission Main)	2	6
2	Medium Benefit Area	2	4
1	Small Benefit Area (I.e., Localized Area)	2	2

Table 9-6
Water Main Improvements Priority Ranking – Sorted by CIP Number

CIP No.	Fire Flow Points	Pipe Year Points	Pipe Material Points	Benefit Area Points	Priority Rank Total	
					Points	Ranking
R1	0	6	6	2	14	Med
R2	8	6	6	2	22	High
R3	12	0	0	4	16	Med
R4	0	6	6	6	18	Med
R5	0	6	6	2	14	Med
R6	8	3	2	6	19	Med
L1	0	0	0	2	2	Low
L2	0	0	0	6	6	Low
L3	0	0	0	6	6	Low
L4	12	0	0	2	14	Med
L5	12	0	0	4	16	Med
L6	0	0	0	2	2	Low

Table 9-7
Water Main Improvements Priority Ranking – Sorted by Total Points

CIP No.	Fire Flow Points	Pipe Year Points	Pipe Material Points	Benefit Area Points	Priority Rank Total	
					Points	Ranking
R2	8	6	6	2	22	High
R6	8	3	2	6	19	Med
R4	0	6	6	6	18	Med
R3	12	0	0	4	16	Med
L5	12	0	0	4	16	Med
R1	0	6	6	2	14	Med
R5	0	6	6	2	14	Med
L4	12	0	0	2	14	Med
L2	0	0	0	6	6	Low
L3	0	0	0	6	6	Low
L1	0	0	0	2	2	Low
L6	0	0	0	2	2	Low

Prioritizing Other Improvements

All other improvements were prioritized based on project need, maintenance requirements, existing deficiencies, capacity requirements, and reliability considerations. The results of the priority ranking of the water main and all other improvements were used to schedule the improvements, as presented in the section that follows.

SCHEDULE OF IMPROVEMENTS

The results of prioritizing the improvements were used to assist in establishing an implementation schedule that can be used by the City to assist in the planning and budgeting of capital improvement projects for the Water Utility. The implementation schedule shown in **Table 9-8** includes the previously described water main improvements and all other improvements described earlier in this chapter that are planned in the next 20 years.

The project cost estimates shown in the table are based on 2011 dollars for all years shown. These cost estimates will be adjusted by the City at the time of project implementation to include an escalation factor that represents inflation and the construction market conditions anticipated at the actual time of construction. The financial program in **Chapter 10** describes in more detail the escalation factor to be used for future project cost adjustments.

Table 9-8
Planned Improvements Implementation Schedule

CIP No.	Description	Water Main Priority	Estimated Project Cost (2011 x$1000)	20-Year Schedule of Improvements Planned Year of Project and Estimated Cost in 2011 (x$1000)							
				2011	2012	2013	2014	2015	2016	2017-22	2023-30
Water Main Replacement											
R1	8" Water Main in NE Stella St from 3rd Ave NE to 4th Ave NE	Med	$255	$255							
R2	8" Water Main in NE Stella St from 2nd Ave NE to 3rd Ave NE	High	$171	$171							
R3	8" Water Main in NE Kennedy Dr from Dougherty Place NE to 4th PL NE	Med	$173					$173			
R4	12" Tolt 2 Supply Line from Tolt Supply Station to NE Big Rock Rd	Med	$1,854						$278	$1,576	
R5	8" Water Main in Bruett Rd from 3rd Ave NE to 3rd Pl NE	Med	$242								$242
R6	8" Water Main in 1st Ave NE from NE Stephens St to NE Ring St	Med	$219			$219					
Water Main Looping Improvements											
L1	NE 143rd Pl & 272nd Pl NE PRV Abandonment and 8" Water Main Loop in 272nd Ave NE from NE 143rd Pl to NE 144th St	Low	$301							$301	
L2	12" Water Main Loop in 3rd Ave NE from 143rd Pl to Big Rock Rd	Low	$1,045								$1,045
L3	12" Water Main Loop in Batten Rd NE from NE 140th Pl to Big Rock Rd	Low	$1,627								$1,627
L4	12" Water Main Loop in NE Stephens St from Main St NE to Railroad Ave NE	Med	$112							$112	
L5	8" Water Main Loop in 1st Ave NE from NE Virginia St NE to NE Stephens St	Med	$324								$324
L6	8" Water Main Loop in 266th Pl NE from NE 143rd Pl to 266th Circle NE	Low	$80								$80
Pressure Reducing Station and Relief Improvements											
PRV1	Remove 485/555 PRV's in NE Big Rock Rd & 275th Ave NE and reconfigure existing 450/555 PRV to a pressure relief station.		$135		$135						
City-wide Improvements											
CW1	Conservation Program and Leak Detection		$170	$9	$9	$9	$9	$9	$9	$50	$66
CW2	Water Reclamation Activity		$100	$5	$5	$5	$5	$5	$5	$30	$40
CW3	Cross-connection Control Program		$100	$5	$5	$5	$5	$5	$5	$30	$40
CW4	Comprehensive Water System Plan Update (Every 6 years)		$450						$150	$150	$150
Facility Improvements											
F1	Taylor's Landing Well Monitoring and Study		$100	$5	$5	$5	$5	$5	$5	$30	$40
F2	Crestview Estates Reservoir Seismic Evaluation/Improvements & Recoat		$531				$50	$150		$150	$181
F3	Big Rock Road Reservoir Re-coating		$682				$82			$300	$300
F4	Big Rock Road Reservoir Inlet/Outlet Improvements & Seismic Evaluation/Improvements		$500				$50	$100		$350	
F5	615 Zone Pump Station Improvements		$200						$100	$100	
F6	Tolt 1 Supply Station Improvements		$278		$50					$228	
F7	Tolt 2 Supply Station Improvements		$262		$50						$212
F8	Telemetry, Operation and Control Improvements		$345	$5	$50	$75	$125			$45	$45
F9	Meter Removal at Mobile Home Park		$10		$10						
Total Annual Cost (note - average cost per year is shown for years beyond 2016)			**$10,266**	**$455**	**$319**	**$318**	**$331**	**$447**	**$552**	**$575**	**$549**

H:\EVT Projects\10\1167\Figures\ArcGIS File for Figures\FIGURE 9 1 mxd 9/7/2011 2:02:30 PM DKH

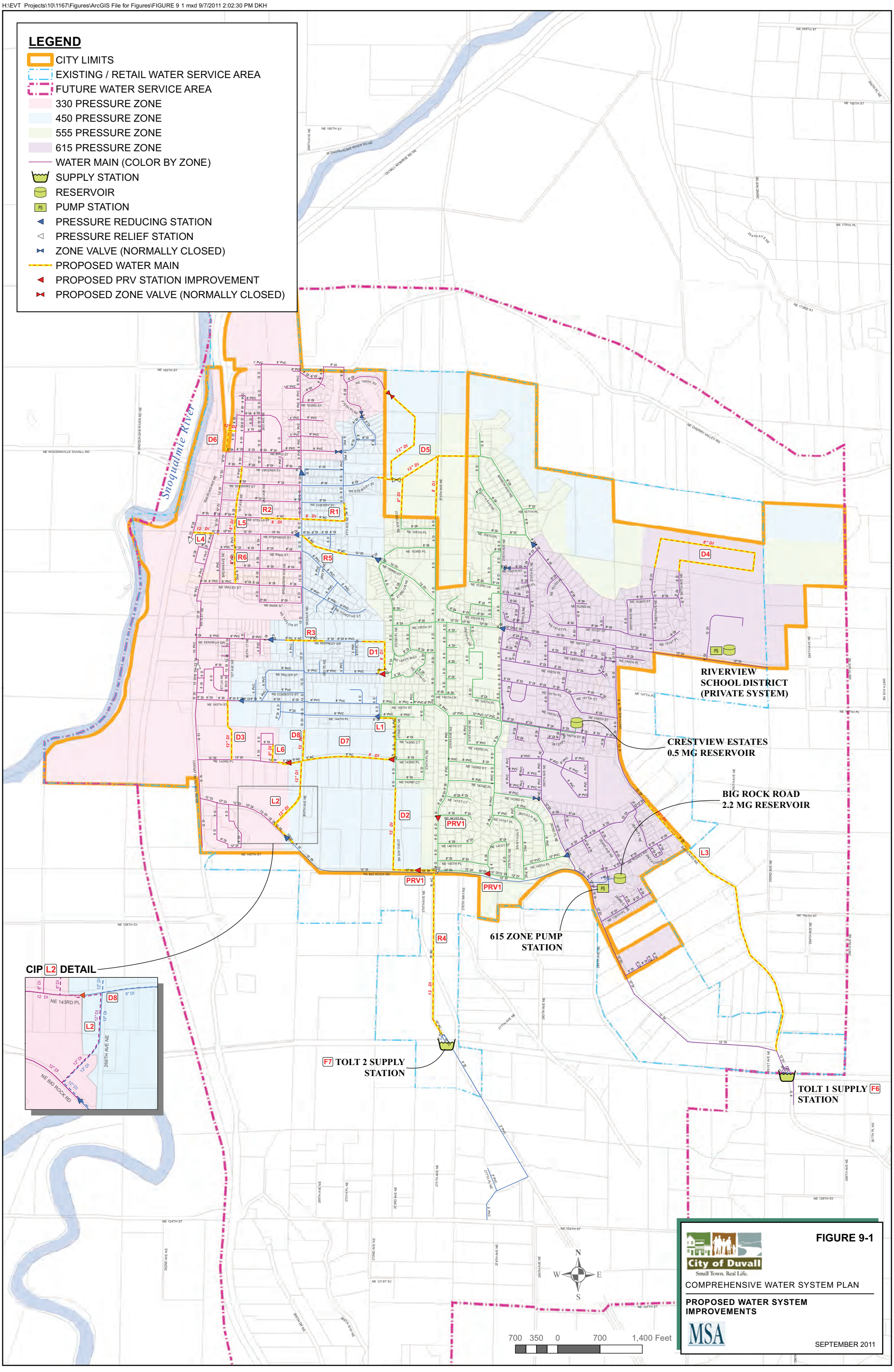

FIGURE 9-1

COMPREHENSIVE WATER SYSTEM PLAN

PROPOSED WATER SYSTEM IMPROVEMENTS

SEPTEMBER 2011

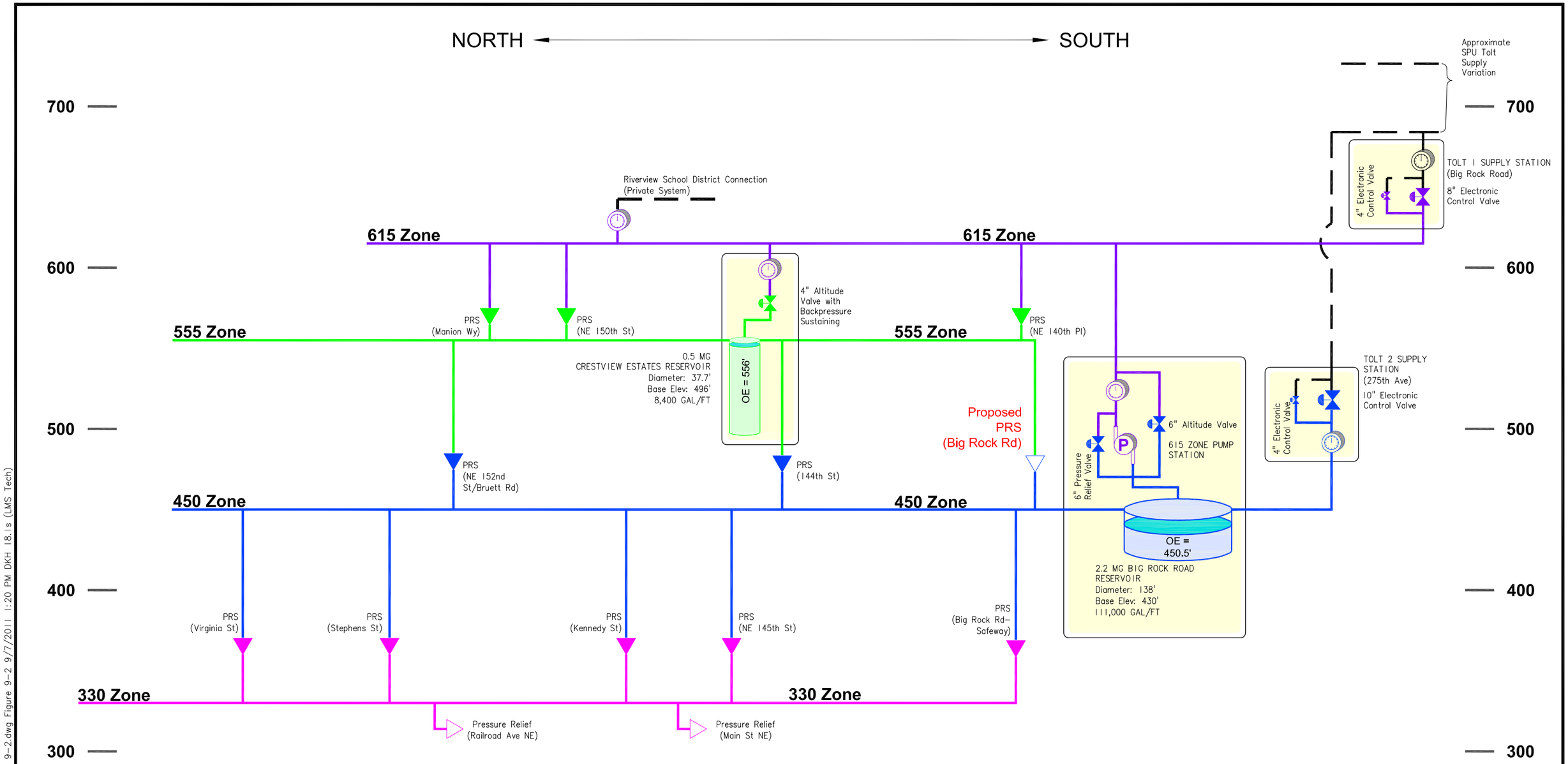

LEGEND

- 615 ZONE
- 555 ZONE
- 450 ZONE
- 330 ZONE
- ADJACENT SYSTEM FACILITIES AT SAME SITE
- PUMP STATION
- PRESSURE REDUCING STATION/VALVE
- CONTROL VALVE
- METER
- PRESSURE RELIEF STATION/VALVE

ABBREVIATIONS

ELEV	ELEVATION
FT	FEET
GAL	GALLONS
MG	MILLION GALLONS
OE	OVERFLOW ELEVATION

Figure 9-2

City of Duvall
Small Town. Real Life.

COMPRHENSIVE WATER SYSTEM PLAN

PROPOSED SYSTEM HYDRAULIC PROFILE

MSA

September 2011

H:\EVT_Projects\10\1167\CAD\10-1167-408-WA-FIG 9-2.dwg Figure 9-2 9/7/2011 1:20 PM DKH 18.1s (LMS Tech)

10

Financial Plan

INTRODUCTION

The objective of a water system financial plan is to identify the total cost of providing water service and provide a financial program that allows the water utility to remain financially viable during execution of its short-term (6-year) and long-term (20-year) Capital Improvement Program (CIP). This viability analysis considers the historical financial condition of the utility, the sufficiency of utility revenues to meet current and future financial and policy obligations, and the financial impact of executing the CIP. Furthermore, the financial plan provides a review of the utility's current rate structure with respect to rate adequacy, equity, promotion of water conservation, and customer affordability.

PAST FINANCIAL PERFORMANCE

This section includes a historical summary of financial performance as reported by the City of Duvall (City) on the Fund Resources and Uses Arising from Cash Transactions statements. The City operates on a cash basis and does not track accruals, depreciation, assets or liabilities.

The City's past financial performance is summarized as follows.

- The City maintains reserve levels in excess of 100% of annual charges for services.
- The City has maintained low levels of outstanding debt and cash-funded much of recent capital costs.
- Both Charges for Goods and Services and operating expenses have increased at an average of between four and five percent annually.
- The City has realized positive operating income in all summarized years, and positive net cash flow in all years except 2007 and 2009.
- Capital revenues peaked in 2006 and have declined through 2009 reporting.

Comparative statements for the previous six years (2004 through 2009) are summarized in **Table 10-1** for the 401 Water Fund and **Table 10-2** for the 407 Water Capital Improvement Fund. The City combined the two funds for reporting purposes in 2009, so the 2009 year does not compare to 2004 through 2008. The funds remain separate for internal tracking and use of funds.

Table 10-1
Fund Resources and Uses Arising from Cash Transactions – 401 Water Fund

401 Fund Resources and Uses Arising From Cash Transactions	2004	2005	2006	2007	2008	2009 [1]
Beginning Net Cash and Investments	$ 1,115,057	$ 1,357,785	$ 1,693,390	$ 1,944,110	$ 1,669,479	$2,317,036
Revenue and Other Sources						
Intergovernmental			$ 190,000		$ 276,195	$ 450,000
Charges for Goods and Services	$ 1,251,565	$ 1,241,144	$ 1,397,320	$ 1,389,885	$ 1,373,767	$ 1,521,450
Fines and Penalties	$ 42,186	$ 41,273	$ 46,167	$ 34,360	$ 50,047	$ 51,930
Miscellaneous	$ 22,952	$ 48,592	$ 63,977	$ 90,965	$ 65,798	$ 24,017
Capital Contributions						$ 129,212
Other Financing Sources				$ 402		
Total Revenue and Other Sources	$ 1,316,703	$ 1,331,009	$ 1,697,464	$ 1,515,612	$ 1,765,807	$ 2,176,610
Total Resources	$ 2,431,760	$ 2,688,794	$ 3,390,854	$ 3,459,722	$ 3,435,286	$ 4,493,646
Operating Expenditure						
General Government						$ 605
Physical Environment	$ 1,011,220	$ 898,175	$ 1,372,623	$ 1,062,093	$ 1,179,158	$ 1,250,922
Total Operating Expenditures	$ 1,011,220	$ 898,175	$ 1,372,623	$ 1,062,093	$ 1,179,158	$ 1,251,527
Operating Income/Loss	$ 305,483	$ 432,834	$ 324,841	$ 453,518	$ 586,649	$ 925,082
Debt Service						$ 64,494
Capital Outlay		$ 4,802	$ 19,620	$ 663,165	$ 237,691	$ 885,888
Other Financing Uses	$ 62,756	$ 92,428	$ 54,501	$ 64,984	$ 288,248	$ 35,363
Total Expenditures and Other Uses	$ 62,756	$ 97,230	$ 74,121	$ 728,149	$ 525,939	$ 985,746
Net Cash Flow	$ 242,728	$ 335,604	$ 250,720	$ (274,631)	$ 60,710	$ (60,663)
Excess (Deficit) of Resources Over Uses	$ 1,357,785	$ 1,693,389	$ 1,944,110	$ 1,669,479	$ 1,730,189	$ 2,256,373
Nonrevenues		$ 12,259				
Nonexpenditures		$ 12,259				$ 65,200
Ending Net Cash and Investments	$ 1,357,785	$ 1,693,390	$ 1,944,110	$ 1,669,479	$ 1,730,189	$ 2,191,173

[1] In 2009, Funds 401 and 407 are combined for reporting purposes, though remain separate for internal tracking and use of funds.

Table 10-2
Fund Resources and Uses Arising from Cash Transactions – 407 Water Capital Improvement Fund

407 Fund Resources and Uses Arising From Cash Transactions	2004	2005	2006	2007	2008	2009 [1]
Beginning Net Cash and Investments	$ 423,809	$ 350,049	$ 503,237	$ 657,484	$ 727,010	$2,317,036
Revenue and Other Sources						
Intergovernmental						$ 450,000
Charges for Goods and Services						$ 1,521,450
Fines and Penalties						$ 51,930
Miscellaneous		$ 9,127	$ 18,125	$ 31,597	$ 21,295	$ 24,017
Capital Contributions	$ 152,570	$ 281,837	$ 286,513	$ 189,596	$ 219,155	$ 129,212
Other Financing Sources						
Total Revenue and Other Sources	$ 152,570	$ 290,964	$ 304,638	$ 221,193	$ 240,450	$ 2,176,610
Total Resources	$ 576,379	$ 641,013	$ 807,875	$ 878,677	$ 967,460	$ 4,493,646
Operating Expenditure						
General Government						$ 605
Public Safety						$ 1,250,922
Physical Environment		$ 3,473	$ 543	$ 2,844	$ 3,113	
Exoenditures and Other Financial Uses	$ 226,330					
Total Operating Expenditures	$ 226,330	$ 3,473	$ 543	$ 2,844	$ 3,113	$ 1,251,527
Debt Service		$ 14,556	$ 12,871	$ 11,186	$ 9,500	$ 64,494
Capital Outlay						$ 885,888
Other Financing Uses		$ 36,671	$ 53,900	$ 54,560	$ 302,800	$ 35,363
Total Expenditures and Other Uses	$ -	$ 51,227	$ 66,771	$ 65,746	$ 312,300	$ 985,746
Excess (Deficit) of Resources Over Uses	$ 350,049	$ 586,313	$ 740,561	$ 810,087	$ 652,047	$ 2,256,373
Nonrevenues						
Nonexpenditures		$ 83,077	$ 83,077	$ 83,077	$ 65,200	$ 65,200
Ending Net Cash and Investments	$ 350,049	$ 503,237	$ 657,484	$ 727,010	$ 586,847	$ 2,191,173

[1] In 2009, Funds 401 and 407 are combined for reporting purposes, though remain separate for internal tracking and use of funds.

CURRENT FINANCIAL STRUCTURE

This section summarizes the current financial structure of the water utility, which is used as the baseline for the capital financing strategy and financial forecast developed for this financial plan.

Funds

The City maintains a Water Fund (401) and a Water Capital Improvement Fund (407). The Water Fund receives all operating revenues and makes payment for all operating expenditures.

The Water Capital Improvement Fund receives connection fee revenue and loan proceeds for projects. Capital projects and debt service are paid from this fund.

Financial Policies

A brief summary of the key financial policies employed by the City, as well as those recommended for the City's further study and evaluation, are discussed below.

Minimum Fund Balances

Operating reserves are designed to provide a liquidity cushion to ensure that adequate cash working capital will be maintained to deal with significant cash balance fluctuations, such as seasonal fluctuations in billings and receipts, unanticipated cash expenses or lower than expected revenue collections.

A capital contingency reserve is an amount of cash set aside in case of an emergency should a piece of equipment or a portion of the utility's infrastructure fail unexpectedly. Additionally, the reserve could be used for other unanticipated capital needs, including capital project cost overruns.

The City maintains a minimum balance policy equal to $600,000 in 2011 for the combined 401 and 407 funds, which grows with annual inflation year-to-year.

In order to ensure sufficient cash management levels in each of the funds, separate minimum policies for each fund are used for financial projects in this analysis. The financial plan incorporates a minimum balance target of 60 days of operations and maintenance (O&M) in the Water Fund (401). This is an appropriate and adequate level of operating reserve, particularly when recognizing that the City's single largest cost, purchased water, is based on volume used and thus mitigates downturns in water sales. The net balance of the $600,000 total minimum is used to set the minimum in the Water Capital Improvement Fund (407). For example, the 2011 minimum in the 401 Fund is $233,234. The minimum in the 407 Fund is then $366,766, for a total of $600,000 between the two funds.

System Reinvestment

The purpose of system reinvestment funding is to provide for the replacement of aging system facilities to ensure sustainability of the system for ongoing operation. Each year, the utility's assets lose value, and as they lose value they move toward eventual replacement. This accumulating loss in value and future liability is typically measured for reporting purposes through an annual depreciation expense, which is based on the original cost of the asset over its anticipated useful life. While this expense reflects the consumption of the existing asset and its original investment, the replacement of that asset will likely cost much more when factoring in inflation and construction conditions. Therefore, the added annual replacement liability is even greater than the annual depreciation expense.

The City operates on a cash basis and does not track accruals or asset balances and depreciation. The City does maintain asset records that allow a reasonable estimate of depreciation expense for the purpose of calculating an appropriate level of annual system reinvestment funding.

This analysis incorporates a policy of annual system reinvestment funding equal to the annual depreciation expense (estimated) less the annual principal repayment. Due to the combination of the City paying off all existing debt during the forecast period and no projected debt issuance,

applying this policy at 50% of the full level minimizes near-term rate increases to fund this policy, and future rate impacts when there is no debt principal to net against estimated annual depreciation.

Debt Management

The City has one outstanding revenue bond and two Public Works Trust Fund (PWTF) loans. Each of these shows payment complete within the six-year forecast period. The City should continue to maintain sound financial policies to position the City for favorable terms when securing future borrowing.

AVAILABLE FUNDING ASSISTANCE AND FINANCING

Feasible long-term capital funding strategies must be defined to ensure adequate resources are available to fund the CIP. In addition to the utility's resources, such as accumulated cash reserves and rate funded capital and connection charges, capital needs can be met from outside sources such as grants, low interest loans and bond financing.

Utility Resources

Utility resources appropriate for funding capital needs include accumulated cash above the operating reserve threshold; rate revenues designated for capital spending purposes; and capital related revenues, such as capital Plant Investment Fees and other connection fees.

General Facilities Charge

A General Facilities Charge (GFC), also called a connection charge as provided for in RCW 35.92.025, refers to a one-time charge imposed on new customers as a condition of connecting to the utility system. The purpose of the GFC is two-fold: 1) to promote equity between new and existing customers; and 2) to provide a source of revenue to fund capital projects. GFCs provide a way for new customers to share in the capital costs incurred to support their addition to the system. GFC revenues provide a source of cash flow that is used to support utility capital needs; however, the GFC revenue can only be used to fund utility capital projects or pay debt service incurred to finance capital projects. In the absence of a GFC, growth-related capital costs would be borne in large part by existing customers. In addition, the net investment in the utility already collected from existing customers, whether through rates, charges and/or assessments, would be diluted by the addition of new customers, effectively subsidizing new customers with prior customers' payments. To establish equity, a GFC should recover a proportionate share of the existing and future infrastructure costs from a new customer. From a financial perspective, a new customer should become financially equivalent to an existing customer by paying the GFC.

The City currently imposes a GFC of $6,320 per equivalent residential unit (ERU) to all new water customers (this does not include wholesale pass-through connection charges). Based upon current system investment, projected infrastructure needs identified in the 20-year CIP, and system capacity, a maximum of $6,424 per ERU is calculated for 2011. The City's policy is to apply an annual inflationary escalator to the GFC. Applying the construction cost level escalator used in the financial analysis results in a 2012 GFC of $6,656 per ERU. The financial plan presented herein assumes the utility-wide GFC would be implemented in 2012. The updated

City GFC calculation is shown in **Table 10-3** and charges by meter size are shown in **Table 10-4.**

Table 10-3
General Facilities Charge Calculation

Existing Cost Basis			Notes
PLANT-IN-SERVICE			
Utility Capital Assets		$ 28,839,146	Original cost of plant-in-service as of 2010
less: Contributed Capital		($13,931,120)	CIAC, Grants, and other contributed capital
plus: Interest on Non-Contr buted Plant		8,020,130	Interest on assets up to a maximum 10-year period
Existing Cash Balances	$1,872,876		Beginning cash balances for year 2011
less: Debt Principal Outstanding	(1,432,050)		Total principal outstanding for the existing debt
less: Net Debt Principal Outstanding		$ -	Debt principal outstanding, net of cash reserves
TOTAL EXISTING COST BASIS		**$ 22,928,156**	
Future Cost Basis			**Notes**
CAPITAL IMPROVEMENT PLAN			
Total Future Projects		$ 15,072,000	Total 2011-2030 CIP
less: Identified Repair & Replacement Projects		(1,560,981)	Not eligible for recovery hrough GFC
less: Contributed Future Upgrade & Expansion Assets		(5,328,500)	Not eligible for recovery hrough GFC
TOTAL FUTURE COST BASIS		**$ 8,182,519**	
Customer Base		**ERUs**	**Notes**
Existing Equivalent Residential Units		2,844	2010 Meter Capacity Equivalents (ERUs)
Future Equivalent Residential Units (Incremental)		1,999	Projected Incremental CIP Capacity
TOTAL CUSTOMER BASE		4,843	Projected CIP Capacity
Resulting Charge		**Total**	
Existing Cost Basis		$ 22,928,156	
Future Cost Basis		8,182,519	
Total Cost Basis		$ 31,110,676	
Total Customer Base		4,843	
2011 TOTAL CHARGE PER ERU for City Facilities		**$ 6,424**	
2012 TOTAL CHARGE PER ERU for City Facilities		**$ 6,656**	

Table 10-4
2012 General Facilities Charges by Meter Size

Meter Size	Capacity Ratio	Existing GFC	Calculated GFC
5/8-inch	1.00	$ 6,320	$ 6,656
3/4-inch	1.50	9,478	9,983
1-inch	2.50	15,797	16,639
1 1/2-inch	5.00	31,596	33,279
2-inch	8.00	50,552	53,246
3-inch	16.00	101,107	106,493

Local Facilities Charges

While a GFC is the manner in which new customers pay their share of general facilities costs, local facilities funding is used to pay the costs of local facilities that connect each property to the system's infrastructure. Local facilities funding is often overlooked in a rate forecast since it is funded upfront by either connecting customers and developers or through an assessment to properties, but typically not from rates. Although these funding mechanisms do not provide a capital revenue source toward funding CIP costs, the discussion of these charges is included because they impact the new system customers.

There are a number of mechanisms that can be considered toward funding local facilities. One of the following scenarios typically occurs: a) the utility charges a connection fee based on the cost of the local facilities (under the same authority as the GFC); b) a developer funds the extension of the system to their development and turns those facilities over to the utility (contributed capital); or c) a local assessment is set up called a Utility Local Improvement District (ULID/LID) that collects property assessments from benefited properties.

A Local Facilities Charge (LFC) is a variation of the connection charge authorized by RCW 35.92.025. It is a City-imposed charge to recover the cost related to extending service to local properties. Often called and applied as a front-footage charge imposed based on the length water main footage "fronting" a particular property, it is usually implemented as a reimbursement mechanism to a utility for the cost of a local facility that directly serves a property. It is a form of connection charge and, as such, can accumulate up to ten years of interest. LFCs typically apply to instances where no developer-installed facilities are needed through developer extension due to the prior existence of available mains already serving the developing property.

A Developer Extension is a requirement that a developer install onsite and sometimes offsite improvements as a condition of extending service. These are in addition to the GFC required and must be built to utility standards. Utilities are authorized to enter into developer extension agreements under RCW 35.91.020. Part of the developer extension agreement between a utility and developer might include a latecomer agreement, resulting in a latecomer charge to new connections to the developer extension.

Latecomer Charges are a variation of developer extensions whereby a new customer connecting to a developer-installed improvement makes a payment to a utility based on their share of the developer's cost (RCW 35.91.020). The utility passes this payment to the developer who installed the facilities. This is part of the developer extension process, and defines the allocation of costs and records latecomer obligations on the title of affected properties. No interest is allowed, and the reimbursement agreement cannot exceed 15 years in duration.

A LID/ULID is another mechanism for funding infrastructure that assesses benefited properties based on the special benefit received by the construction of specific facilities (RCW 35.43.042). Most often used for local facilities, some ULIDs also recover related general facilities costs. Substantial legal and procedural requirements can make this a relatively expensive process, and there are mechanisms by which a ULID can be rejected by a majority of property ownership within the assessment district boundary.

Outside Sources

Government Programs

Grants and low cost loans for Washington State utilities are available from the Departments of Ecology and Community Trade and Economic Development. Each includes programs for which the City might be eligible, but are primarily targeted at sewer programs or low income and/or rural communities.

Washington State Department of Ecology

The Department of Ecology (Ecology) Water Quality Program administers three major funding programs that provide low interest loans, grants or loans and grant combinations for projects that protect, preserve and enhance water quality in Washington State. These are primarily for wastewater projects and are not applicable to the City's water CIP. Further detail is available in the Funding Guidelines found at http://www.ecy.wa.gov/programs/wq/funding/funding.html.

Washington State Department of Commerce

The Department of Commerce has four grant and loan programs that the City could potentially be eligible for:

- Community Development Block Grants General Purpose Grant;
- Community Economic Revitalization Board Grant and Loan Program;
- Public Works Trust Fund Loan Program; and
- Drinking Water State Revolving Fund Loan Program.

Community Development Block Grants (CDBG) General Purpose Grants

CDBGs are made available to Washington State small cities, towns and counties in carrying out significant community and economic development projects that principally benefit low and moderate income persons. Eligible applicants are Washington State cities and towns with a population less than 50,000 and counties with a population less than 200,000 that are non-entitlement jurisdictions or are not participants in a HUD Urban County Entitlement Consortium. Eligible projects include public facilities for water, wastewater, storm sewer and streets. The application period is September through November annually.

Community Economic Revitalization Board (CERB)

CERB, a division of the Washington State Department of Commerce, primarily offers low cost loans; grants are made available only to the extent that a loan is not reasonably possible. The CERB targets public facility funding for economically disadvantaged communities, specifically for job creation and retention. Priority criteria include the unemployment rates, number of jobs created and/or retained, wage rates, projected private investment, and estimated state and local revenues generated by the project. Traditional construction projects are offered at a maximum dollar limit of $1 million per project. A local match of 25 percent is targeted.

Eligible applicants include cities, towns, port districts, special purpose districts, federally recognized Indian tribes and municipal corporations.

The CERB's policy is that all loans will be secured by a general obligation pledge of the taxing power of the borrowing entity. Terms do not exceed 20 years, including available payment deferral of interest and principal for up to 5 years. Interest rates match the most current rate of Washington State bonds (not to exceed 10 percent). Application deadlines are 45 days prior to a CERB meeting, which are scheduled 6 times per year. For more information, see www.choosewashington.com/SiteCollectionDocuments/CERB/CERB Fact Sheet.pdf

Public Works Trust Fund (PWTF)

Cities, towns, counties and special purpose districts are eligible to receive loans from the Public Works Board, a division of the Washington State Department of Commerce. Water, sewer, storm, roads, bridges and solid waste/recycling infrastructure projects are eligible and funds may be used for repair, replacement, rehabilitation, reconstruction and improvements including reasonable growth (generally the 20-year growth projection in the comprehensive plan).

PWTF loans are available at interest rates of 0.5 percent, 1 percent and 2 percent, with the lower interest rates given to applicants who pay a larger share of the total project costs. The loan applicant must provide a minimum local match of 5 percent towards the project cost to qualify for a 2 percent loan; 10 percent for a 1 percent loan; and 15 percent for a 0.5 percent loan. The useful life of the project determines the loan term up to a maximum of 20 years. Applications are accepted year-round.

For more information, see: http://www.pwb.wa.gov/

Drinking Water State Revolving Loan Program (DWSRL)

The DWSRL is jointly administered by the Public Works Board and the Department of Health. The program is intended to improve drinking water systems and protect public health for publicly and privately owned systems.

There is no match required, terms are not to exceed 20 years and project completion time is 36 months after loan execution. The loan limit is $3 million, with a loan fee of 1 percent, and interest rates range from 0 to 1.5 percent depending upon the number of households at or below the county's median income. Applications are accepted annually in May.

For more information, see: http://www.doh.wa.gov/ehp/dw/our_main_pages/dwsrf.htm

Bond Financing

General Obligation Bonds

General obligation (GO) bonds are secured by the full faith and credit of the issuing agency, committing all available tax and revenue resources to debt repayment. With this high level of commitment, GO bonds have relatively low interest rates and few financial restrictions. However, the authority to issue GO bonds is restricted in terms of the amount and use of the

funds, as defined by the Washington State Constitution and statute. Specifically, the amount of debt that can be issued is linked to assessed valuation.

RCW 39.36.020 states:

(ii) Counties, cities, and towns are limited to an indebtedness amount not exceeding one and one-half percent of the value of the taxable property in such counties, cities, or towns without the assent of three-fifths of the voters therein voting at an election held for that purpose.

(b) In cases requiring such assent counties, cities, towns, and public hospital districts are limited to a total indebtedness of two and one-half percent of the value of the taxable property therein.

While bonding capacity can limit availability of GO bonds for utility purposes, these can sometimes play a valuable role in project financing. A rate savings may be realized through two avenues: 1) the lower interest rate and related bond costs; and 2) the extension of repayment obligation to all tax-paying properties (not just developed properties) through the authorization of an ad valorem property tax levy.

Revenue Bonds

Revenue bonds are commonly used to fund utility capital improvements. The debt is secured by the revenues of the issuing utility and the debt obligation does not extend to the City's other revenue sources. With this limited commitment, revenue bonds typically bear higher interest rates than GO bonds and also require security conditions related to the maintenance of dedicated reserves (a bond reserve) and financial performance (added bond debt service coverage). The utility agrees to satisfy these requirements by ordinance as a condition of the bond sale.

Revenue bonds can be issued in Washington State without a public vote. There is no bonding limit, except perhaps the practical limit of the utility's ability to generate sufficient revenue to repay the debt and provide coverage. In some cases, poor credit might make issuing bonds problematic.

Funding Options Summary

An ideal funding strategy would include the use of grants and low cost loans when debt issuance is required. However, these resources are very limited and competitive in nature and do not provide a reliable source of funding for planning purposes (unless already approved). It is recommended that the City pursue these funding avenues but assume bond financing to meet needs above the utility's available cash resources. GO bonds may be useful for special circumstances; however, due to the bonding capacity, limits are most often reserved for other City (non-utility) purposes. Revenue bonds are a more reliably available financing mechanism for utility needs. The capital financing strategy developed to fund the CIP assumes the following funding priority:

- Accumulated capital cash reserves.
- Annual revenue collections from General Facilities Charges.

- Annual transfers of rate-funded capital or excess cash (above minimum balance targets) from operating accounts.
- Interest earnings on capital fund balances and other miscellaneous capital resources.
- Revenue bond financing.

FUNDING AND FINANCING THE CIP

The forecast of capital project funding is based on the 2011 through 2030 CIP. Costs are stated in 2011 dollars and escalated to the year of planned spending at an annual inflation rate of 3.62 percent, based on the historical average change in the ENR index for the most recent five-year period. The CIP identifies a total of $15.1 million. Of that, $5.3 million are identified as developer-funded projects. City-funded CIP costs total $455,000 for the current year (2011), $2.5 million ($2.9 escalated) for the 6-year forecast (2012-2017), and $6.7 million for the remainder of the 20-year period ($10.7 escalated). A summary of CIP costs is presented in **Table 10-5**.

Table 10-5
Summary of CIP Costs to Be Funded

CIP Summary	2011 $	Escalated
Total CIP	$ 15,072,000	
Developer-Funded	5,328,500	
City-Funded	$ 9,743,500	$ 14,082,977
Current (2011)	$ 455,000	$ 455,000
Six-Year (2012-2017)	2,542,417	2,927,028
Remaining (2018-2030)	6,746,083	10,700,949
	$ 9,743,500	$ 14,082,977

The capital funding plan defines a strategy for funding the CIP, including an analysis of available resources from rate revenues, existing reserves, GFCs, debt financing and any special resources that may be readily available (e.g. grants, developer contributions, etc.). The funding plan impacts rate levels where debt issuance is projected and therefore repayment required by annual revenues.

A summary of the 6-year and 20-year capital funding plan is shown in **Table 10-6**.

Table 10-6
Capital Funding Plan

Capital Funding	2011	2012	2013	2014	2015	2016	2017	2011-2017 CIP	2011-2030 CIP
Capital Projects (inflated)	**$ 455,000**	**$ 330,541**	**$ 341,427**	**$ 368,242**	**$ 515,286**	**$ 659,468**	**$ 712,063**	**$ 3,382,028**	**$ 14,082,977**
CDBG Grant - 2nd Ave Waterline	$ 98,000	$ -	$ -	$ -	$ -	$ -	$ -	$ 98,000	$ 98,000
Revenue Bond Proceeds	-	-	-	-	-	-	-	-	-
Use of Capital Fund balance [a]	357,000	330,541	341,427	368,242	515,286	659,468	712,063	3,284,028	13,984,977
Total Funding Sources	**$ 455,000**	**$ 330,541**	**$ 341,427**	**$ 368,242**	**$ 515,286**	**$ 659,468**	**$ 712,063**	**$ 3,382,028**	**$ 14,082,977**
Revenue Bond Issuance	**$ -**	**$ -**	**$ -**	**$ -**	**$ -**	**$ -**	**$ -**	**$ -**	**$ -**

[a] Includes annual GFC revenues and system reinvestment funding

The six-year CIP is projected to be 100% cash-funded through the combination of existing reserves, GFC revenue collection and system reinvestment funding reserves. The remainder of the 20-year CIP is also projected to be fully cash-funded.

REVENUE REQUIREMENTS FORECAST

The revenue requirement analysis forecasts the amount of annual revenue that needs to be generated by rates. The analysis incorporates operating revenues, O&M expenses, debt service payments, rate funded capital needs, and any other identified revenues or expenses related to utility operations, and determines the sufficiency of the current level of rates. Revenue needs are also impacted by debt covenants (typically applicable to revenue bonds) and specific fiscal policies and financial goals of the utility.

Typically, two revenue sufficiency criteria are tested to determine the annual revenue need: 1) cash needs must be met; and 2) debt coverage requirements must be realized. In order to operate successfully with respect to these goals, both tests of revenue sufficiency must be met.

Cash Test

The cash flow test identifies all known cash requirements for the utility in each year of the 2011 through 2017 planning period. Typically, these include O&M expenses, debt service payments, rate funded capital and any additions to specified reserve balances. The total annual cash needs of the utility are then compared to total operating revenues (under current rates) to forecast annual revenue surpluses or shortfalls.

Coverage Test

The coverage test is based on a commitment made by the City when issuing revenue bonds and some other forms of long-term debt. As a security condition of issuance, the City is required per covenant to agree that the revenue bond debt would have a higher priority for payment (a senior lien) compared to most other utility expenditures; the only outlays with a higher lien are O&M expenses. Debt service coverage is expressed as a multiplier of the annual revenue bond debt service payment. For example, a 1.0 coverage factor would imply no additional cushion is required. A 1.25 coverage factor means revenues must be sufficient to pay O&M expenses and

annual revenue bond debt service payments, plus an additional 25 percent of annual revenue bond debt service payments. The excess cash flow derived from the added coverage, if any, can be used for any utility purpose, including funding capital projects. The City has one outstanding revenue bond with a final payment year of 2016. The forecast includes a 1.25 coverage requirement through repayment of that bond. Though revenue bonds are the conservative debt instrument assumption for any borrowing to finance CIP projects, no borrowing is projected to be needed in the capital funding analysis and therefore, no coverage requirement is projected beyond 2016.

It should also be noted that the City's 2011 reserve levels appear sufficient to pay-off the balance of the outstanding revenue bond, rather than continue debt service repayment over the next five years, saving $124,000 in interest payments and releasing the City from the annual coverage obligation through 2016. A more detailed evaluation of this option might provide an opportunity to effectively lower the utility's overall costs and rate requirements.

In determining the annual revenue requirement, both the cash and coverage sufficiency tests must be met. The test with the greatest deficiency drives the level of deficiency in a given year.

Financial Forecast

The financial forecast is developed from the City's 2011 budget documents along with other key factors and assumptions, to develop a complete portrayal of the water utility's annual financial obligations. The following is a list of the key revenue and expense factors and assumptions used to develop the forecast.

- This financial plan assumes just under 2 percent annual growth to the customer base for the 6-year forecast.
- Water rate revenues are forecasted incorporating annual customer growth and based on actual 2010 water rate revenue reporting. (As 2010 was a low water sales year due to weather and economic conditions, this may prove a conservative basis for the revenue forecast).
- Interest earnings on cash balances are projected at 0.5 percent in 2011 and projected to increase at 0.5% per year until leveling off at 3% in 2016.
- The 2011 budget forms the baseline for operating costs.
- O&M expenses are escalated from the 2011 budget at 2 percent per year for general cost inflation (based on the last year of CPI change). State taxes are calculated based on prevailing tax rates.
- Purchased water from the City of Seattle is projected to increase at 3% in 2012 and growth plus CPI in the years following. This considers the anticipated net effect of a published 2012 SPU increase in and restructuring of charges, which have largely offsetting impacts for the City of Duvall.

- Existing debt service schedules were provided by the City and include one revenue bond and two PWTF loans.
- System reinvestment funding is implemented at 50% of annual depreciation net of debt principal repayment.

Although the capital funding plan is completed for the 20-year time horizon, the financial plan focuses on the current year, 2011, plus the 6-year planning period, 2012 through 2017. **Table 10-7** summarizes the forecasted financial performance and rate revenue requirements for 2011 through 2017 based on the above assumptions.

Table 10-7
Revenue Requirements Forecast 2011 through 2017

	Current Year	Projected					
Revenue Requirements	**2011**	**2012**	**2013**	**2014**	**2015**	**2016**	**2017**
Revenues							
Rate Revenues Under Existing (2011) Rates	$ 1,483,721	$ 1,504,222	$ 1,527,285	$ 1,552,910	$ 1,581,098	$ 1,611,849	$ 1,645,162
Use of GFC Revenue for Debt Repayment	261,407	266,250	281,747	273,128	279,239	15,836	15,681
Non-Rate Revenues	39,521	38,954	43,132	46,374	49,941	51,599	47,548
Total Revenues	**$ 1,784,648**	**$ 1,809,426**	**$ 1,852,163**	**$ 1,872,412**	**$ 1,910,278**	**$ 1,679,284**	**$ 1,708,391**
Expenses							
Cash Operating Expenses	$ 1,418,838	$ 1,465,233	$ 1,518,466	$ 1,575,875	$ 1,636,513	$ 1,705,780	$ 1,775,609
Existing Debt Service	261,407	279,695	281,747	273,128	279,239	15,836	15,681
New Debt Service	-	-	-	-	-	-	-
Rate-Funded System Reinvestment	-	87,671	173,647	177,061	173,244	200,734	307,328
Total Expenses	**$ 1,680,245**	**$ 1,832,599**	**$ 1,973,860**	**$ 2,026,064**	**$ 2,088,996**	**$ 1,922,349**	**$ 2,098,618**
Annual Surplus / (Deficiency)	**$ 104,404**	**$ (23,174)**	**$ (121,696)**	**$ (153,652)**	**$ (178,718)**	**$ (243,066)**	**$ (390,227)**
Net Revenue from Rate Increases	-	40,134	82,721	142,718	207,368	293,647	387,859
Use of Operating Reserves	(104,404)	(16,961)	38,975	10,934	(28,650)	(50,581)	2,368
Net Surplus / (Deficiency)	**$ -**	**$ 0**	**$ 0**	**$ (0)**	**$ (0)**	**$ -**	**$ 0**
CPI Policy Annual Increase		**2.00%**	**2.00%**	**2.00%**	**2.00%**	**2.00%**	**2.00%**
Incremental Rate Increase		**1.00%**	**1.00%**	**2.00%**	**2.00%**	**3.00%**	**3.00%**
Total Annual Rate Increase		**3.00%**	**3.00%**	**4.00%**	**4.00%**	**5.00%**	**5.00%**
Cumulative Annual Rate Adjustment		**3.00%**	**6.09%**	**10.33%**	**14.75%**	**20.48%**	**26.51%**
Monthly Rate @ 7 ccf	$43	$45	$46	$48	$50	$52	$55
General Facilities Charge [a]	$ 6,320	$6,656	$6,897	$7,147	$7,405	$7,673	$7,951

[a]The City will also impose an SPU Facility Charge pass-through.

A portion of the rate revenue requirement is made up of debt repayment that can also be funded by GFC revenue. It is the City's policy to use all available GFC revenue to support debt repayment. Debt repayment is projected to be fully supported by GFC revenue in all years except 2012 when it falls just short. It is generally inadvisable to rely on growth-based revenue such as GFCs to fulfill such a critical revenue need such as debt repayment, but since the City's existing debt is paid off within the near-term forecast and no future debt is projected, this forecast relies on the adopted policy and practice of GFC revenue fully funding debt repayment through completion in 2017.

Without GFC revenue for debt repayment, City rate revenues were insufficient in 2011 to meet all elements of the revenue requirement. Currently GFC revenue is funding the only capital element of the forecast, debt repayment. Once the debt is paid off, rate-funded system

reinvestment (RFSR) increases since there is no longer a debt principal payment reducing the estimated annual depreciation. Since GFC revenue cannot support RFSR, or any other operating requirement, rates are projected to increase to fund the City's total annual revenue requirement, along with other inflation-based cost increases.

It is the City's policy to implement annual CPI-U level rate increases each year as a minimum. The forecast assumes a 2% inflation rate, so the projected minimum annual rate increase is 2%, with incremental demands on rates driving incremental increases.

EXISTING RATE STRUCTURE

The existing water rate structure consists of a base monthly fee of $22.61 per month, which includes the first 200 cubic feet (cf) of water. Volume rates for use above 200 cf increase at each 200 cf interval with all use over 1,000 cf at $7.24 per hundred cf (ccf). The City does not charge according to rate class and the fixed charge does not vary by meter size. All water customers pay for water according to this rate structure. The City's existing water rates with future increases from the financial forecast applied are in **Table 10-8**.

Table 10-8
Projected 2012-2017 Water Rates

	Existing	With Projected Increases					
Water Rates	2011	2012	2013	2014	2015	2016	2017
Monthly Water Rates							
Fixed Charge (200 cf)	$22.61	$23.29	$23.99	$24.95	$25.94	$27.24	$28.60
Volume Charges							
201 cf to 400 cf	$3.37	$3.47	$3.58	$3.72	$3.87	$4.06	$4.26
401 cf to 600 cf	$4.33	$4.46	$4.59	$4.78	$4.97	$5.22	$5.48
601 cf to 800 cf	$5.29	$5.45	$5.61	$5.84	$6.07	$6.37	$6.69
801 cf to 1,000 cf	$6.26	$6.45	$6.64	$6.91	$7.18	$7.54	$7.92
>1,000 cf	$7.24	$7.46	$7.68	$7.99	$8.31	$8.72	$9.16

[1]Volume charges are per 100 cf within each range

To enhance conservation in the water rate structure, it is recommended that the City consider setting rates by class of customer, as usage patterns and appropriate rate structures vary between single family residential, commercial, irrigation and other classes of customers.

Structural changes to rates should derive from a cost-of-service rate study to provide an appropriate distribution and recovery of revenues.

Affordability

A common affordability benchmark for utility rates is to test the monthly median income equivalent against the existing and projected monthly utility rates. If monthly bills are less than 1.5 percent of the median household income for the demographic area, they are generally considered affordable. The 2009 median household was $114,460. Median income is forecasted to include 2 percent annual escalation. **Table 10-9** presents the single family residential monthly

water bills over the forecast period, tested against the 1.5 percent threshold. Based on this index, the projected rates remain within an affordable range.

Table 10-9
Affordability Test

	Current	With Projected Increases					
	2011	2012	2013	2014	2015	2016	2017
Median Income	$ 90,426	$ 92,234	$ 94,079	$ 95,960	$ 97,880	$ 99,837	$101,834
1.5% Monthly	$ 113.03	$ 115.29	$ 117.60	$ 119.95	$ 122.35	$ 124.80	$ 127.29
Projected Monthly Bill *	$43.30	$44.60	$45.94	$47.77	$49.69	$52.17	$54.78

* Assumes 7 ccf monthly

CONCLUSION

Based on the source data and assumptions used, the financial analysis indicates that the rate plan provided would be sufficient to fund utility operations and the CIP developed for this Comprehensive Water System Plan, while maintaining reasonably affordable rates.

It is recommended that the City complete a rate study to develop rate classes, evaluate equity and develop conservation-enhanced rate structures for each class.

APPENDIX A

Water Service Area Agreements

AGREEMENT
FOR ESTABLISHING WATER UTILITY SERVICE AREA BOUNDARIES
AS IDENTIFIED BY THE EAST KING COUNTY
COORDINATED WATER SYSTEM PLAN

PREAMBLE

The Agreement for the water utility service area boundary identifies the external boundary of the service area for which the designated water purveyor has assumed direct retail water service responsibility. The responsibilities accepted by the water purveyor are outlined in the East King County Coordinated Water System Plan (CWSP), and as defined by the adopted rules and regulations of the Department of Health (DOH). This agreement does not give new authorities or responsibilities to the water purveyor or to the County or State regulatory agencies, but rather acknowledges the geographical area for these designated service responsibilities.

The terms used within this Agreement shall be as defined in the implementing regulations of Chapter 70.116 RCW, except as identified below.

1. East King County Critical Water Supply Service Area Map shall mean the map referenced in the Agreement as Attachment A for the retail service area, except as amended in accordance with the CWSP procedures and with the concurrence of the affected water purveyors.

2. Retail Service Area shall mean the designated geographical area in which a purveyor shall supply water either by direct connection, by a satellite system, or through interim service by an adjacent utility or Satellite System Management Agency under agreement with the designated utility.

3. Wholesale Service Area shall mean the designated geographical area in which a purveyor, a group of purveyors, or another organization provides water to other water purveyors on a wholesale basis. A wholesale water supplier shall not provide water to individual customers in another purveyor's retail service area except with the concurrence of the purveyor responsible for the geographical area in question.

4. Lead Agency for administering the Agreement for Establishing Water Utility Service Area Boundaries shall be King County, unless otherwise established by amendment to the CWSP.

The authority for this Agreement is granted by the Public Water System Coordination Act of 1977, Chapter 70.116 RCW.

WHEREAS, Such an Agreement is required in WAC 248-56-730, Service Area Agreements-Requirement of the Public Water System Coordination Act; and

WHEREAS, Designation of retail water service areas, together with the cooperation of utilities, will help assure that time, effort, and money are best used by avoiding unnecessary duplication of service; and

WHEREAS, Definite future service areas will facilitate efficient planning for, and provision of, water system improvements within East King County as growth occurs; and

WHEREAS, Definite retail and wholesale service areas will help assure that water reserved for public water supply purposes within East King County will be utilized in the future in an efficiently planned manner,

NOW, THEREFORE, the undersigned party, having entered into this Agreement by signature of its authorized representative, concurs with and will abide by the following provisions:

Section 1. Service Area Boundaries. The undersigned party acknowledges that the East King County Critical Water Supply Service Area Map, included as Attachment A to this Agreement and as may be subsequently updated, identifies the utility's future water service area. The undersigned further acknowledges that there are no service area conflicts with adjacent water utilities, or, where such conflicts exist, agrees that no new water service will be extended within disputed areas until such conflicts are resolved.

Section 2. Common Service Area Transfer. It is understood that utilities may initially continue existing water service within the boundaries of neighboring utilities, as defined in Section 1 hereof. Such common service areas, if they exist, are described in Attachment B to this agreement. Also included in Attachment B are copies of, or a list of, all resolutions, ordinances, or agreements enabling these uncontested overlays. The undersigned party agrees that any water line for retail service extending outside of the retail service area boundary, as set for in Section 1, shall be phased out and service transferred to the designated adjacent utility on an economic basis or by mutual agreement.

Economic basis considerations may include, but are now limited to:

(a) A determination by the present owner of service lines that maintenance, repair, and/or replacement costs exceed attributable income.

(b) Planned or imminent major street improvements or major

improvements to either or both water systems which include an opportunity to transfer service. The terms of the transfer of service ares described in this Section shall be established in a separate agreement among the adjacent utilities whose boundaries are affected.

Section 3. Boundary Streets. Unless separate agreements exist with adjacent utilities concerning water services or other utility services, this party agrees that the water utility which is located to the north and/or east of boundary streets between this party and adjacent utilities will be entitled to provide future water service on both sides of those streets. Depth of service on boundary streets shall be limited to one platted lot or as otherwise agreed by the utilities. Existing services on boundary streets shall remain as connected unless transfer of service is agreed to by both parties, as per Section 2. These provisions do not disallow the placement of mains in the same street by adjacent utilities where geographic or economic constraints require such placement for the hydraulic benefit of both utilities.

Section 4. Boundary Adjustments. If, at some time in the future it is appropriate for the undersigned party to make service area boundary adjustments, such modifications must receive written concurrence (which shall not be unreasonably withheld) of all utilities that would be directly affected by such a boundary adjustment and the proper legislative authority(ies). This provision does not apply where boundary adjustments are made as a result of municipal annexations or incorporations, nor is it intended to modify the provisions of state law. These written modifications must be noted and filed with the designated King County lead agency and DOH. It is understood by the undersigned party that if, as provided by RCW 70.116.040, it is unable to provide service within its designated service area boundary it may decline to do so. But, in that case, an applicant may be referred to other adjacent utilities, to a pre-qualified Satellite System Management Agency (SSMA), or a new utility may be created and the original service area boundary will be adjusted accordingly.

Section 5. Service Extension Policies. The undersigned party agrees that in order to expand its water service area, other than by addition of retail customers to existing water mains, or to serve in the capacity of a pre-qualified SSMA, it shall have adopted design standards and Utility Service extension policies. The design standards shall meet or exceed the East King County Minimum Design Standards.

Municipalities further agree that if they identify a service area outside of their existing municipal corporate boundaries, the municipality will assume full responsibility for providing water service equivalent to (excluding rates and charges) the level of service provided for their inside-city customers. This will be in conformance with applicable land use policies.

The agreement by reference includes the following attachments:

Attachment A - East King County Critical Water Supply Service Area Map. (see Section 1)

Attachment B - Common Service Area Agreement - Option - Utility may attach copies or list such agreements if relevent (see Section 2)

IN WITNESS WHEREOF, the undersigned party has executed this Agreement as of 3-31-97.

City of Duvall
Water Utility

Glen Kuntz
Representative

Mayor
Title

Receipt Acknowledged:

King County

Date

Department

INTERLOCAL AGREEMENT REGARDING WATER SERVICE AREA BOUNDARIES

This Agreement ("Agreement") is executed this 20th day of October, 2000, by and between the City of Duvall (the "City") and King County Water District No. 119 (the "District"), both of which are municipal corporations of the State of Washington.

RECITALS

A. WHEREAS, pursuant to Chapter 70.116 RCW, the Public Water System Coordination Act, the City and the District previously agreed upon future water utility service area boundaries for the purpose of designating the water purveyor with the responsibility to provide water service within such designated water service area; and

B. WHEREAS, the future water utility service areas designated by the City and the District are contained in a Coordinated Water System Plan for East King County which was approved by the Washington State Department of Health and other government agencies with jurisdiction, pursuant to the requirements and procedures set forth in Chapter 70.116 RCW; and

C. WHEREAS, the parties now desire to modify and revise the future water service area boundary between the City and the District; now, therefore,

AGREEMENT

IT IS HEREBY AGREED by and between the parties hereto as follows:

1. Revised Water Service Area Boundary. The City and the District hereby agree upon a new future water service area boundary as such revised boundary is legally described on Exhibit "A" attached hereto and as such revised boundary is depicted on a map attached hereto as Exhibit "B" ("Revised Boundary").

2. Governmental Approvals. The Revised Boundary shall be approved by all governmental agencies with jurisdiction and the parties agree to give notice of the approval of this Agreement to Metropolitan King County, the Water Utility Coordinating Committee ("WUCC"), the Washington State Department of Health, the East King County Regional Water Authority, the Washington State Boundary Review Board for King County and any other governmental agencies which are required to review and approve this Agreement. The parties agree to cooperate and assist in any reasonable manner to obtain the approval of the Revised Boundary provided that the District shall pay all costs and expenses incurred to obtain such governmental agency approval including those costs and expenses incurred by the City.

3. Entire Agreement/1988 Water Service Area Agreement. This Agreement constitutes the entire agreement between the parties concerning the subject matter herein and there are no representations or agreements other than those incorporated herein. Future agreements may occur between the parties to identify, agree upon or revise future water service area boundaries. However, that portion of the District's water service area as described and depicted on Exhibit "A" ("the Anderson Area") of an agreement dated January 6, 1988 between the parties entitled "Agreement to Provide Water Service and Amending Water Planning Boundaries and Service Areas" as amended by further agreement dated June 16, 2000 (collectively the "1988 Agreement") shall be included in the City's water service area boundary and the City shall provide water service exclusively to such area if the District's water system is not extended to serve such area within seven (7) years from the date of this Agreement; in such event, the parties shall cooperate to obtain the approval of appropriate governmental agencies required for such change in service area; provided, that no other terms and conditions of the 1988 Agreement are modified or amended by this Agreement and the 1988 Agreement shall remain in full force and effect.

4. Service Area Obligation. Nothing herein shall be construed to alter the rights, responsibilities, liabilities or obligations of the either party regarding provision of water services to the future water service area designated herein except as specifically set forth herein.

Wherefore, the parties have executed this Agreement on the date and year first herein above written.

CITY OF DUVALL

Glen Kuntz 10-20-00

Mayor Date

ATTEST:

Arlee Schwarz 10-20-00

City Clerk Date

APPROVED AS TO LEGAL FORM

City Attorney

KING COUNTY WATER
DISTRICT NO. 119

By: _____
President, Board of Commissioners

EXHIBIT "A"

LEGAL DESCRIPTION

DATE: OCTOBER 2000

That portion of Township 26 North, Ranges 6 and 7 East, Willamette Meridian, King County, Washington described as follows:

Beginning at a point on the north line of Section 36, Township 26 North, Range 6 East, W.M. at the south margin of Carnation-Duvall Road NE; thence East along the north line of said Section 36 to the southwest corner of Section 30, Township 26 North, Range 7 East, W.M.; thence North along the west line of the Southwest Quarter of the Southwest Quarter of said Section 30 to the northwest corner of the South Half of the South Half of said Section 30; thence East along the north line of said South Half of the South Half of Section 30 to the west line of the East Half of the East Half of said Section 30; thence North along said west line of the East Half of the East Half to the southwest corner of the Northwest Quarter of the Northeast Quarter of the Northeast Quarter of said Section 30; thence East along the south line of the said Northwest Quarter of the Northeast Quarter of the Northeast Quarter to the southeast corner thereof; thence North along the east line of said Northwest Quarter of the Northeast Quarter of the Northeast Quarter to the northwest corner of the Northeast Quarter of the Northeast Quarter of the Northeast Quarter of Section 30, Township 26 North, Range 7 East, W.M.; thence East along the north line of said Northeast Quarter, of the Northeast Quarter, of the Northeast Quarter, to the northwest corner of Section 29, Township 26 North, Range 7 East, W.M.; thence continuing East along the north line of Section 29, Township 26 North, Range 7 East, W.M. to the southwest corner of the Southeast Quarter of the Southwest Quarter of Section 20, Township 26 North, Range 7 East, W.M.; thence North along the east line of the West Half of the West Half of said Section 20 to the southwest corner of the Southeast Quarter of the Southwest Quarter of Section 17, Township 26 North, Range 7 East, W.M.; thence continuing North along the east line of the West Half of the West Half of said Section 17 to the southwest corner of the Southeast Quarter of the Southwest Quarter of Section 8, Township 26 North, Range 7 East, W.M.; thence continuing North along the east line of the West Half of the West Half of said Section 8 to the southeast corner of the Northeast Quarter of the Northwest Quarter of the Northwest Quarter of said Section 8; thence West along the south line of the Northeast Quarter of the Northwest Quarter of the Northwest Quarter to the southwest corner thereof; thence North along the west line of the Northeast Quarter of the Northwest of the Northwest Quarter to the northwest corner thereof; thence West along the north line of Section 8 to the northwest corner of said Section 8, thence North along the west line of Section 5, Township 26 North, Range 7 East, W.M. to the northwest corner thereof and the northern limits of King County and the terminus point of this description.

EXHIBIT "B"

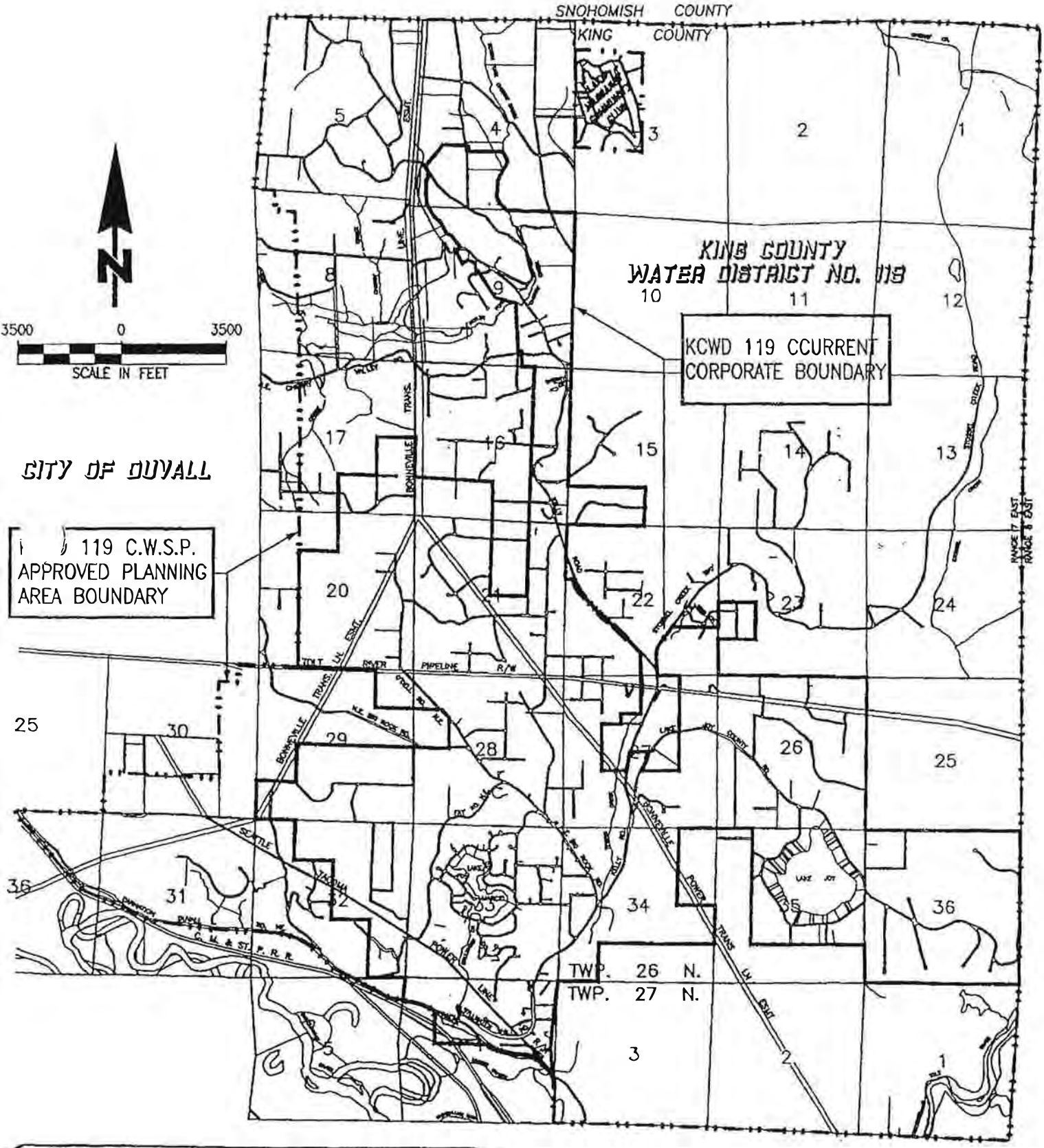

ECNW ENGINEERING CONSULTANTS NORTHWEST
35717 PACIFIC HWY. S.
FEDERAL WAY, WA 98003
(206) 952-7797
FAX (206) 952-7799

AGREEMENT TO PROVIDE WATER SERVICE & AMENDING
WATER PLANNING BOUNDARIES AND SERVICE AREAS
CITY OF DUVALL
WATER DISTRICT NO. 119

THIS AGREEMENT is made this the 6th day of January, 1988, between the City of Duvall, and Water District No. 119, King County.

WHEREAS, the City of Duvall is a code city under title 35A of the Revised Code of Washington, and maintains and operates a City of Duvall Water Department and municipal water supply system; and

WHEREAS, the real property outlined in Exhibit "A" attached hereto and incorporated herein by reference, consists of property the westerly 1/3 of which is in the City of Duvall's water planning area, and the balance of which is in water planning area of water District No. 119, and all of said area is geographically located close to the Big Rock Road water line, located in the City of Duvall's water service area; and

WHEREAS, Water District No. 119 requests water service from the City of Duvall so as to provide water service to the above-described real property; and

WHEREAS, the City of Duvall has offered to provide such water service to Water District No. 119 in the above described area as based upon discussions between the City Attorneys and Engineers and Water District No. 119 Attorneys and Engineers.

WHEREAS, the westerly one-third of the real property outlined above should be placed into the water planning and service area of Water District No. 119 due to engineering considerations once water service is provided under this Agreement.

NOW THEREFORE, it is hereby agreed as follows:

1. The City of Duvall shall install a tee and valve at the most southerly end of the Big Rock Road water line (this location is immediately just south of the north boundary of the Tolt pipeline right-of-way). Water District No. 119 shall reimburse the City of Duvall for its necessary expenses incurred in installing the tee and valve.

2. Water District No. 119 shall be responsible for all improvements beyond said valve, including pipelines, construction of lines, permits, water services, etc. It is expressly understood that all City of Duvall water service engineering standards as set forth by ordinance shall be applicable to such improvements including but not limited to an eight (8) inch main, installation of eight (8) inch main across frontages of properties requesting service, etc. All charges related to applying for City water service as provided by ordinance shall also be paid to the City by Water District No. 119. Water District No. 119 shall bear all costs and responsibility of maintaining and repairing the improvements. The City of Duvall shall have the right to maintain or repair the

improvements and shall be reimbursed by the Water District for same, if, after reasonable notice to the Water District of maintenance or repairs necessary in the judgment of the City, the Water District fails to effect same.

3. The water service shall be specifically limited to the real property outlined in Exhibit "A" attached hereto and incorporated herein by reference. Water District No. 119 shall be responsible for obtaining and verifying exact legal descriptions of the outlined property, and the same shall be attached hereto as Exhibit "B" and incorporated herein by reference. The same shall be submitted to and approved by the City attorneys and engineers prior to any construction.

4. Water District No. 119 shall be responsible for securing all necessary easements prior to any construction.

5. The City of Duvall shall read and total each water meter connection to the line, and shall bill Water District No. 119 accordingly. Water District No. 119 shall be responsible for billing the individual services off the line.

6. The City of Duvall shall bill Water District No. 119 for water service fees as follows: monthly service charge, basic, $18.00/400 CF; excess $1.20/100 CF; as currently set forth by city ordinance for outside City water service, or as the same may be amended by the City in the future for all outside City of Duvall water services. It is also agreed that Water District No. 119 shall reimburse the City of Duvall for any peak surcharges from the City of Seattle Water Department attributable to the water service authorized herein.

7. Water District No. 119 shall pay to the City of Duvall, prior to the installation of any improvements as authorized herein, the sum of $3,000.00 as a supplemental connection fee for reimbursement of City of Duvall expenses incurred in connection with the new Tolt Pipeline.

8. Water District No. 119 shall reimburse the City of Duvall for all fees associated with its attorneys and engineers related to the preparation of this Agreement and associated legal and engineering costs to the City of Duvall.

9. There shall be a maximum of (10) single family residence serviced by the water line authorized herein within the real property outlined above.

10. Once ten (10) single family residence water service connections are made, the City of Duvall and Water District No. 119 agree to negotiate regarding the costs attendant to the installation of a master meter.

11. Water District No. 119 will defend, protect, indemnify, and hold harmless, the City of Duvall from and against any and all claims, costs, damages, expenses or liability for any and all injuries to persons or tangible property arising from this Agreement, including the costs of attorney's fees incurred in defending any such action, involving the

improvements installed by the Water District as described in Paragraph 2 of this Agreement.

12. The parties understand and confirm that this Agreement is subject to the review and approval of the City of Seattle Water department. Water District No. 119, shall be responsible for securing the approval of the City of Seattle Water Department and be responsible for all costs, fees, permits, etc. attendant thereto. No construction or installation of water line and water service as authorized herein may commence until such approval has been duly secured.

13. The westerly one-third of the area to be serviced by Water District No. 119 by this Agreement is currently in the City of Duvall water planning area pursuant to prior agreement between the parties. The City of Duvall agrees to the placement of this area into Water District No. 119's water planning and service area. Water District No. 119 shall be responsible for obtaining the necessary governmental permits and approvals in order to have this property placed into the Water District's water planning and service area. The City of Duvall shall cooperate with Water District No. 119 in obtaining a change in the water planning and service area described herein.

14. The parties agree to review this Agreement biannually, and updates to the Agreement may be made as mutually agreed upon by the parties.

15. Both parties warrant that the signatures below of the duly authorized representatives of each are made by persons legally authorized to sign on behalf of each party, and the same have secured the permission of each party as provided by statute, ordinance, or otherwise in order to endorse this Agreement.

SIGNED this the 17th day of November 1987.

City of Duvall

Jeane Baldwin

Jeane Baldwin, Mayor
As authorized by the City
of Duvall Resolution, dated:

STATE OF WASHINGTON)
) ss.
COUNTY OF KING)

On this 12th day of November, 1987, before me, the undersigned, a Notary Public in and for the State of Washington, personally appeared before me Jeane Baldwin, to me known as the Mayor of the City of Duvall and acknowledges the said instrument to be the free and voluntary act and deed of said Mayor for the uses and purposes therein mentioned, and on oath stated that she is authorized to execute the said instrument.

Witness my hand and official seal hereto affixed the day and year first above written.

NOTARY PUBLIC in and for
the State of Washington,
residing at Kirkland
My commission expires: 3/1/91.

SIGNED this the 6th day of January ~~1987.~~ 1988

Water District No. 119

As authorized by WD119, dated:

STATE OF WASHINGTON)
) ss.
COUNTY OF KING)

On this 6th day of January, 1987, before me, the undersigned, a Notary Public in and for the State of Washington, personally appeared before me Andrew Dalla Pozza, to me known as President of King County Water District No. 119 and acknowledges the said instrument to be the free and voluntary act and deed of said District for the uses and purposes therein mentioned, and on oath stated that he is authorized to execute the said instrument.

Witness my hand and official seal hereto affixed the day and year first above written.

NOTARY PUBLIC in and for
the State of Washington,
residing at Seattle
My commission expires: 4/20/90

APPENDIX B

Water Supply Contract

CITY OF SEATTLE

FULL REQUIREMENTS CONTRACT

FOR THE

SUPPLY OF WATER

TO

CITY OF DUVALL

TABLE OF CONTENTS

Page(s)

SECTION I. DEFINITIONS **2**

SECTION II. TERM OF CONTRACT AND GUARANTEES **5**

II.A. TERM OF CONTRACT 5
II.B. AGREEMENT TO SUPPLY AND PURCHASE WATER 7
II.C. CONTINUITY OF SERVICE WITHIN THE TERM OF THE CONTRACT 10
II.D. WATER QUALITY 11
II.E. CONSERVATION 14

SECTION III. CONDITIONS OF SERVICE **16**

III.A. MINIMUM HYDRAULIC GRADIENT 16
III.B. RESALE TO OTHER PARTIES 17
III.C. INTERCONNECTION WITH OTHER SYSTEMS 17
III.D. DEVELOPMENT OF REGIONAL SUPPLY AND TRANSMISSION INFRASTRUCTURE 19
III.E. METERING EQUIPMENT 19

SECTION IV. COST OF WATER SUPPLY & TRANSMISSION **20**

IV.A. RATE-MAKING AND COST-ALLOCATION PRINCIPLES 20
IV.B. RATEMAKING FRAMEWORK 22
IV.C. WATER SUPPLY PRICING – BASIC SERVICES 23
IV.D. TRANSMISSION PRICING - BASIC SERVICES 25
IV.E. ALLOCATION OF COSTS AND REVENUES INTO COST POOLS 27
IV.F. ELECTIVE SERVICES 41
IV.G. RATE ADJUSTMENT 41
IV.H. RETAIL RATE-SETTING 42
IV.I. TRUING ACTUAL COSTS AND ACTUAL REVENUES 42

SECTION V. OPERATING BOARD **43**

SECTION VI. PLANNING **44**

VI.A. REPORTING OF PLANNING DATA 44
VI.B. SUBMITTAL OF WATER UTILITY WATER SYSTEM PLANS 44
VI.C. SEATTLE AS WATER PLANNING AGENCY 44
VI.D. COMPREHENSIVE CAPITAL FACILITIES PLAN 45
VI.E. EMERGENCY PLANNING 46

SECTION VII. PAYMENT **46**

VII.A. COLLECTION OF MONEY DUE CITY 46
VII.B. PENALTIES FOR LATE PAYMENT 46
VII.C. BILLING DISPUTES 46

SECTION VIII. CONTRACT AMENDMENTS **47**

SECTION IX. DISPUTE RESOLUTION **47**

IX.A. OPERATING BOARD REVIEW 47
IX.B. SEATTLE CITY COUNCIL REVIEW 48
IX.C. NON-BINDING MEDIATION 48

IX.D. RESORT TO LITIGATION 48
IX.E. EFFICIENCY OF REVIEW 49

SECTION X. MISCELLANEOUS 49

X.A. NOTIFICATION 49
X.B. SEVERABILITY 50
X.C. CONSENT 50
X.D. EMERGENCY SITUATIONS 51
X.E. NO JOINT VENTURE - INDIVIDUAL LIABILITY 51
X.F. COMPLETE AGREEMENT 51
X.G. RELINQUISHMENT OF PRIOR CONTRACT 51
X.H. VENUE, JURISDICTION AND SPECIFIC PERFORMANCE 51
X.I. DEFAULT 51
X.J. FORCE MAJEUR 52
X.K. SUCCESSORS 52
X.L. EXHIBITS 52

FULL REQUIREMENTS CONTRACT

BETWEEN
THE CITY OF SEATTLE
AND
THE CITY OF DUVALL

FOR THE SUPPLY OF WATER

THIS CONTRACT is entered into between the CITY OF SEATTLE ("Seattle"), a municipal corporation of the State of Washington, and the CITY OF DUVALL ("Water Utility"), a municipal corporation of the State of Washington.

RECITALS

1. Seattle owns and operates a system for the supply, transmission, and distribution of potable water and is authorized to sell and distribute water to its residents and to other persons and customers located outside the corporate limits of Seattle.
2. Seattle's water system is integral to the health and welfare of the residents located within the water service area shown in Seattle's Water System Plan. Seattle intends to provide water from the system to meet the current and future needs of the residents of such water service area when such service is requested from Seattle.
3. In meeting this service commitment, Seattle must ensure that this role does not place financial burdens on its retail customers for which they do not receive a corresponding benefit.
4. This contract and contracts of a similar nature with other wholesale customers of Seattle located within Seattle's service area are intended to provide those customers with the security of a long term service commitment and to describe the terms and conditions associated with that commitment.

5. Under this contract, Seattle intends to provide wholesale water to Water Utility at an equivalent Wholesale Level of Service with the same pricing and operational principles as it provides itself.

6. Given the extensive growth of Seattle and the surrounding areas and the impacts upon infrastructure and costs, this contract is intended to provide sufficient water for growth. As a general philosophy for cost sharing purposes, the parties desire to adopt the principle that "growth should pay for growth."

7. Seattle and Water Utility, together with other Wholesale Customers of Seattle, have agreed to establish an Operating Board comprised of representatives pledged to represent the best interests of the region in order to provide overall direction to the Administrator of the Seattle Regional Water Supply System.

NOW, THEREFORE, in consideration of mutual covenants herein, it is agreed as follows:

SECTION I. **DEFINITIONS**

For the purposes of this contract, the following terms have been defined as:

"1982 Water Purveyor Contract" – That certain Water Purveyor Contract between Water Utility and Seattle having an effective date of September 8, 1982 and expiring on December 31, 2011.

"Administrator" - The Director of Seattle Public Utilities or any other title given to that person who maintains the authority to operate and manage the Seattle Regional Water Supply System.

"Block Purchase Contract" – A contract in which Seattle sells a fixed quantity of water to a wholesale customer on a take or pay basis.

"Existing Supply Resources" - Current components of the Seattle Regional Water Supply System which consist of the Cedar River storage, treatment and diversion facilities, the Tolt River storage, treatment and diversion facilities, and the Seattle Well Fields as set forth in Exhibit VII.

"Full Requirements Contract" – A contract in which Seattle supplies a Wholesale Customer with its Full Water Requirements.

"Full Water Requirements" - All of the water needed by Water Utility to meet the needs of its present and future water customers within its service area as shown in Water Utility's water system plan and as shown on Exhibit X.

"Operating Board" – A board of representatives established by Section V hereof and having the powers and duties set forth in Sections II, III, and IV hereof.

"Partial Requirements Contract" - A contract in which Seattle supplies a Wholesale Customer with that portion of its Full Water Requirements above that provided by the Wholesale Customer's own supply.

"Partial Water Requirements" – The amount of water over and above Water Utility's own sources of supply as identified in Exhibits I and XIII and in accordance with this contract needed to meet the needs of its present and future water customers within its service area as shown in Water Utility's water system plan and on Exhibit X.

"Rate of Return on Investment" - Seattle's Average Cost of Debt, plus 1.5 percent.

"Regional Water Conservation Program" - A program which addresses water conservation goals for the Seattle Regional Water Supply System for Seattle, Wholesale Customers, and other customers who enter into a water supply contract with Seattle that includes participation in the Program.

"Seattle's Average Cost of Debt" - The weighted average interest rate on Seattle's water system debt outstanding over the course of a calendar year calculated at the end of each calendar year during the term of this contract.

"Seattle Retail Distribution System" – Seattle's retail water distribution system consisting of its retail customers within the Seattle retail service area as defined in its Water System Plan, and including storage facilities, distribution mains, pumps, disinfection facilities, service connections, and all other facilities not included in the Seattle Regional Water Supply System.

"Seattle Regional Water Supply System" - Seattle's water supply system consisting of dams, impounded water, supply and transmission mains, pumps, treatment facilities, and all other facilities utilized in conveying water to the Seattle Retail Distribution System, Water Utility, and other wholesale customers. This definition does not include the Seattle Retail Distribution System.

"Seattle Transmission Facilities" – Those facilities serving the transmission needs of the Seattle Regional Water Supply System as set forth in Exhibit VIII.

"Seattle Water System Plan" - Seattle's Water System Plan dated April, 2007, and amendments thereto, prepared by Seattle to comply with the requirements of WAC 246-290-100, and successor regulations.

"Service Connection" - The water meter and associated appurtenances, including everything from the outlet from the supply pipeline to the end of the Seattle Public Utilities vault, through which water is delivered from the Seattle Regional Water Supply System to a Wholesale Customer's water system.

"Stranded Costs" – Those water supply and related costs that Seattle and others have invested for the region which may not be recovered as a result of lost revenues.

"Wholesale Customer" – Those customers who purchase water from Seattle under a Full or Partial Requirements Contract for the purposes of reselling to others.

"Wholesale Level of Service" – Water delivered by Seattle in accordance with this contract to the Service Connection intended for Wholesale Customers' distribution to their retail customers. Seattle is not responsible for compliance with Department of Health ("DOH") standards, including fire flow, emergency back-up and water quality within Water Utility's retail service area.

SECTION II. TERM OF CONTRACT AND GUARANTEES

II.A. Term of Contract

1. Term. This contract shall be in effect beginning at 12:01 AM on the Effective Date of this contract and shall remain in effect until 12:00 AM on January 1, 2062.
2. Effective Date. This contract shall be effective upon the date that both parties have signed the contract after approval by their respective legislative bodies ("Effective Date").
3. Subsequent Right of First Refusal. At the end of the term of this contract, Water Utility shall have a right of first refusal to continue to purchase the amount of water then purchased from Seattle at the time of contract expiration.
4. Periodic Review and Right to Change Certain Terms and Conditions. The parties may review and change certain terms and conditions governing the sale of water hereunder by January 1, 2022 and January 1, 2042, or as soon as practicable thereafter, as follows.

a. Consensual Process. On or before January 1, 2021, and then again on or before January 1, 2041, either party may provide the other with a written proposal to amend the contract terms. The parties shall then meet and consider the proposal. If the parties agree to the proposal prior to January 1, 2022 and January 1, 2042, respectively, a written amendment to this contract shall be approved and executed by both parties and this contract shall be amended accordingly.

b. Seattle' s Right to Amend. If the parties are unable to agree on a proposal by Seattle pursuant to subsection a above within the respective one-year periods, Seattle may propose in writing its desired amendment to the Operating Board. Seattle and the Operating Board shall meet and consider the proposed amendment and use reasonable efforts to resolve any differences in the proposal. After 90 days from Seattle's written proposal to the Board, Seattle may propose its desired amendment to the Seattle City Council. If the Operating Board does not agree with such proposal, it may submit a revised proposal to the Seattle City Council within 90 days of Seattle's submission of its proposal to the Seattle City Council. After receiving the Operating Board's alternate proposal, or after the lapse of the 90 day period for the Operating Board to make an alternate proposal, the Seattle City Council may then deny both proposals or approve one of them and issue an amendment to this contract which shall be in effect for the remaining term of the contract from the date of issuance, unless later amended pursuant to subsection a above, or by mutual agreement.

c. Limitation on Seattle's Right to Amend. Notwithstanding subsection b above, Seattle shall not have the right to: (i) reduce its obligation to provide the Full or Partial Water Requirements of Water Utility, as appropriate; (ii) cease to provide wholesale water to Water Utility at an equivalent Wholesale Level of Service as it provides to itself; (iii) charge a higher wholesale rate for water supply and transmission to Water Utility than that charged to the Seattle Retail Distribution System; (iv) reduce its water quality obligations hereunder; (v) change the methodology for calculating Rate of Return on Investment; (vi) restrict Water Utility's right to terminate the contract or reduce its purchase commitment; (vii) disband or significantly reduce the powers of the Operating Board; or (viii) amend any contract provision that will apply only to Water Utility.

II.B. Agreement to Supply and Purchase Water

1. Full Requirements Commitment. Seattle shall supply the Full Water Requirements of Water Utility for the term of this contract. Except as set forth in Exhibit I and section II.B.5 below, Water Utility shall purchase its Full Water Requirements from Seattle.

2. Adjustments in Water Utility's Service Area. In the event Water Utility acquires additional service area that is: 1) located outside of the service area identified in Exhibit X and 2) which is not already served with water from the Seattle Regional Water Supply System, then Seattle shall supply the Full or Partial Water Requirements, as appropriate, of the additional service area subject to a) the availability of water in the Seattle Regional Water Supply System determined on the same basis as would be applied to determine the availability of water for new or expanded wholesale service customers of Seattle; b) the limitation of geographical boundaries in Seattle's water rights claims or permits; and c)

Water Utility's payment of Facilities Charges ("FCs") for the service connections in that additional service area.

3. Assumption or Transfer of Responsibilities. In the event Water Utility's entire service area and service responsibilities are assumed by or are transferred to another utility or utilities, then this contract shall become null and void at the time the assumption or transfer becomes effective; provided, however, if the transferee of the service area is a Wholesale Customer, Seattle shall provide water to the transferee according to the terms of the transferee's water supply contract with Seattle. If the transferee is not a Wholesale Customer, then Seattle shall issue the transferee a water supply contract for such area subject to terms and conditions as Seattle shall determine.

4. Annexation by Seattle. If the entire service area of Water Utility is annexed to Seattle, then this contract shall become null and void upon the effective date of Seattle's assumption of Water Utility's water system.

5. Water Utility's Right to Terminate or Reduce Purchase Commitment. Water Utility's commitment to purchase water from Seattle under this contract may be terminated or reduced subject to the terms and conditions set forth below. Water Utility shall provide Seattle at least 5 years written notice of termination or reduction, provided, however, if Seattle unilaterally amends the terms and conditions of this contract pursuant to Section II.A.4 above, Water Utility may terminate this contract at any time within 1 year thereafter by giving Seattle 1 year written notice.

   a. Automatically Permitted Reductions. Water Utility may, without restriction, upon five years written notice to Seattle, reduce its water purchases from Seattle by an

amount not to exceed 10 million gallons per day ("MGD") of its average annual demand.

b. Reductions Requiring Permission. Water Utility may reduce quantities of water purchased from Seattle by more than 10 MGD or by providing less than five years advance notice of such reduction if in the judgment of the Operating Board, using the criteria listed below, it determines that such reduction is in the best interest of the Seattle Regional Water Supply System as a whole.

c. Criteria. The criteria to be used by the Operating Board in determining the best interest of the Seattle Regional Water Supply System shall include but not be limited to the following:

i. The potential for Stranded Costs and impacts on rates to either the remaining Wholesale Customers or Seattle;

ii. The cost of new resources;

iii. The feasibility and benefit of reallocating to Seattle or other customers the amount of water foregone by Water Utility; and

iv. Environmental aspects of the proposed change.

The Operating Board shall act promptly and reasonably in evaluating and deciding upon Water Utility's request. The Operating Board may approve, with or without reasonable conditions, or deny Water Utility's request based on the above criteria. Approval conditions may include a requirement that Water Utility waive its rights to be served its Full Water Requirements. If the approval conditions are unacceptable to Water Utility, it may elect in writing to withdraw its request and this contract shall continue in full force and effect.

II.C. Continuity of Service within the Term of the Contract

1. Parity of Service. Seattle shall provide wholesale water to Water Utility at an equivalent Wholesale Level of Service that it provides to itself. In the event of a general emergency or weather-related water shortage affecting the entire Seattle Regional Water Supply System, general restrictions placed upon water deliveries to Water Utility shall be determined by the Operating Board and applied consistently to other Wholesale Customers and the Seattle Retail Distribution System. In the event of localized emergency problems, Water Utility acknowledges temporary, localized service interruptions may occur for the duration of the emergency.

2. Emergency Curtailment Measures. It is recognized by both parties that emergency water use curtailment measures may have to be adopted by Seattle to implement on a regional basis in order to meet an emergency condition or a regional water shortage. The procedures to be used in the event of a weather-related regional water shortage, or shortages caused by other emergency factors, shall be as described in Seattle's Water Shortage Contingency Plan in effect as of the effective date of this contract, or successor contingency plans. Successor water shortage contingency plans shall be developed and implemented by Seattle in consultation with the Operating Board. Water Utility shall assist with and support all procedures or emergency curtailment measures that are implemented under the Water Shortage Contingency Plan, or its successor.

3. Other Emergencies. Seattle may temporarily interrupt or reduce deliveries of water to Water Utility if Seattle determines that such interruption or reduction is necessary or reasonable in case of system emergencies or in order to install equipment, make repairs, replacements, investigations and inspections or perform other maintenance work on the

Seattle Regional Water Supply System. Except in cases of emergency, and in order that Water Utility's operations will not be unreasonably interrupted, Seattle shall give Water Utility and the Operating Board reasonable notice of any such interruption or reduction, the reasons for and the probable duration. Seattle shall use its best efforts to minimize service interruptions to Water Utility.

4. Waiver Of Charges. If interruption or reduction in deliveries of water to Water Utility requires that Water Utility draw water supply in a manner that subjects Water Utility to demand charges (as described in Exhibit III hereto), Seattle shall waive such charges during the period of such interruption or reduction.

II.D. Water Quality

1. Seattle Regional Water Supply System. Seattle shall be responsible for water quality within the Seattle Regional Water Supply System as set forth below. Seattle shall construct, operate and maintain water quality treatment facilities and use its best efforts to carry out its water quality responsibilities in the most cost-effective manner for the region.

2. Applicable Standards. Seattle shall at all times during the term hereof deliver water to Water Utility's system that meets or exceeds all applicable Federal, State and local regulations as the same may change from time to time.

3. System-wide Water Quality Plan. Seattle, in consultation with the Operating Board, may develop and maintain a system-wide regional water quality plan. The plan shall describe, at a minimum, goals, objectives, procedures and the means to satisfy legal requirements and industry standards for water quality, monitoring, information exchange, best management practices, adaptive management practices, public health protection, and

cross connection control. The Operating Board may form a technical subcommittee to provide input and review of such plan. Seattle shall share available water quality data and technical expertise with all Wholesale Customers.

4. Distribution Systems. Water Utility shall be responsible for compliance with all applicable federal, State and local water quality laws and regulations applicable to water in its distribution system including any water from its own supply sources.

5. Monitoring. Water quality monitoring shall be performed by Seattle in the Seattle Regional Water Supply System and by Water Utility in its distribution system to comply with federal, State and local water quality regulations, to verify the condition of water that is passing from one entity to the other, to enhance system operation and to document the aesthetic qualities of the water. Notwithstanding the foregoing, Water Utility may contract with Seattle for water quality monitoring services as an elective service under section IV.F. hereof.

6. Water Quality Notifications to Customers (Consumer Confidence Reports). Each party shall prepare at its sole cost periodic water quality notifications to its respective retail customers and regulatory agencies as required by law. Seattle shall provide Water Utility all water quality data in a timely manner regarding the Seattle Regional Water Supply System that Water Utility may be legally required to report in such notices.

7. Water Quality Best Management Practices and Adaptive Management Practices. The Operating Board may develop best management practices ("BMPs") and adaptive management practices ("AMPs") as reasonably necessary to protect water quality within the Seattle Regional Water Supply System. The BMPs and AMPs will include recommendations to prevent deterioration of water quality in transmission and

distribution systems. The parties shall use reasonable efforts to comply with the BMPs and AMPs.

8. Flushing. Water Utility shall be solely responsible for flushing water mains within its system. Flushing allowances will be provided by Seattle only when the Operating Board determines that flushing is required to maintain or improve regional water quality.

9. New Water Sources. Prior to the introduction of any new water supply source, including any direct or indirect potable reuse water, by Water Utility which mixes with water in the Seattle Regional Water Supply System, the proposed source must be evaluated using customary and reasonable water quality criteria developed in consultation with the Operating Board to ensure compatibility with Seattle water and approved in writing by Seattle. The proposed Water Utility source must also meet all federal, state and Seattle water quality and treatment standards. Upon Seattle's request, Water Utility shall also provide Seattle with satisfactory results from a blending study to determine the compatibility of the source with existing sources already in the Seattle Regional Water Supply System, the appropriate method and level of treatment and the probable distribution of the new supply within the Seattle Regional Water Supply System. Water Utility shall also complete a flavor rating analysis of no more than 3.0 as tested by Seattle's flavor profile panel according to the methodology described by the American Water Works Association, or its successor. Water Utility shall obtain all necessary and appropriate regulatory permits, reviews, and approvals for rights to and operational use of such water supply source.

The Operating Board may form a technical subcommittee to develop water quality standards and review and advise on the water quality evaluation criteria for proposed new

sources. Such criteria for new sources shall be the same for surface water and ground water.

10. Transfers Outside the Seattle Regional Water Supply System. If, with the written consent of Seattle, water from the Seattle Regional Water Supply System is transferred between Water Utility and another water utility in a manner that does not use the Seattle Regional Water Supply System, Water Utility, the other water utility, or both, shall be fully responsible for meeting all applicable water quality standards related to the transfer of such water between their respective systems. Seattle will not be responsible for water quality outside of the Seattle Regional Water Supply System or Seattle Retail Distribution System except as may be agreed to under Section II.D.5.

II.E. Conservation

The parties acknowledge that conservation prolongs the time before new supply resources are needed and thus constitutes an important ongoing tool in managing the water resources of the region. Accordingly, Water Utility hereby adopts and agrees to be bound by the Regional Water Conservation Program, as it may be amended from time to time during the term of this contract. In accordance with Part 1, Section B.1.5 of the Settlement Agreement between the Muckleshoot Indian Tribe and the National Marine Fisheries Services and the City of Seattle (Civ. No. 03-3775JLR), Water Utility will implement, through its participation in the Regional Water Conservation Program, conservation measures that are substantially similar to those implemented by Seattle within the Seattle Retail Distribution System.

1. Performance Measurements. For the purposes of determining water conservation performance, Water Utility's water use shall be measured in conjunction with the use of all other participants in the Regional Water Conservation Program. The Operating Board

may develop reasonable criteria to measure the participants' water conservation performance in accordance with such program.

2. Conservation Above the Regional Water Conservation Program. Water Utility acknowledges that water conservation beyond the Regional Water Conservation Program may be required as a condition of State or federal regulations, court orders, settlements or agreements made to avoid litigation, fines or penalties, or as otherwise determined to be reasonably necessary by the Operating Board. The Operating Board may adopt reasonable additional conservation measures and targets for such purposes. Such conservation measures and targets shall apply in the same manner to all holders of Full and Partial Requirements Contracts and the Seattle Retail Distribution System. Except as provided in the next subsection, Water Utility shall implement such additional water conservation measures and meet the additional adopted targets.

3. Water Utility's Option to be Conservation Service Provider. Water Utility may elect to provide its own water conservation program, beyond its commitment to the Regional Water Conservation Program to meet conservation targets adopted by the Operating Board, or more stringent targets. Water Utility shall bear the additional costs thereof and shall be solely responsible for its implementation. Under this option, Water Utility shall be evaluated for meeting the additional water conservation targets solely by its own performance.

4. Incentives and Penalties. The Operating Board may adopt penalties for shortfalls in water conservation and rewards for meeting or exceeding adopted targets. In the event Water Utility or Seattle fails to meet the adopted targets set by the Operating Board, the Operating Board may assess a penalty. Penalties may not exceed the cost of Seattle

undertaking those conservation measures reasonably needed to achieve the adopted target.

5. Postponing the Need for New Water Supply Facilities. In order to avoid the necessity of developing new physical water supply facilities for as long as reasonably practicable, any water saved through conservation in either Seattle's or Water Utility's retail service areas shall be dedicated first to the municipal and industrial water supply requirements of the Seattle Regional Water Supply System before any other use of such water may be undertaken.

SECTION III. CONDITIONS OF SERVICE

III.A. Minimum Hydraulic Gradient

1. Initial Minimum. Seattle shall maintain a minimum hydraulic gradient or head at a maximum flow rate in amounts and at locations described in Exhibit II attached hereto for each Service Connection from the Seattle Regional Water Supply System to Water Utility's distribution system. Such gradients and locations shall be contained in Seattle's and Water Utility's future water system plans. Seattle shall operate and maintain the Seattle Transmission Facilities necessary to carry out such obligation. If Seattle and the Operating Board find that a project resulting in the modification of such minimum gradient or head would benefit the Seattle Regional Water Supply System as a whole, the minimum hydraulic gradient or head described in Exhibit II may be modified by Seattle if such modification is feasible from an economic, land use and engineering perspective taking into account the facilities required to carry out and for Water Utility to adapt to such modification. Seattle may make these modifications only once during any fifteen

(15) year period provided that four (4) years advance written notice is given to Water Utility, unless a shorter notice is approved by the Operating Board.

2. Emergencies. If Seattle is prevented by emergency circumstances from providing such minimum hydraulic gradient, Seattle shall supply not less than the volume of water equivalent to the maximum 24-hour average flow rate required by Water Utility as shown on Exhibit II for each 24 hour period that the minimum hydraulic gradient is interrupted.

3. Additional Service Connections. Additional Service Connections between Water Utility's and Seattle Regional Water Supply System's water systems or adjusted minimum gradients may be established from time to time by mutual agreement between Seattle and Water Utility subject to approval by the Operating Board. Exhibit II shall be appropriately revised to reflect such additions or adjustments.

III.B. Resale to Other Parties

Water Utility may sell water supplied by Seattle to other water utilities located outside of Water Utility's existing or future service area only upon the prior written consent of Seattle (or oral, in case of emergency). Agreements for resale of water by Water Utility listed in Exhibit I are hereby approved by Seattle subject to whatever written terms, conditions and limitations that Seattle has imposed on such resale.

III.C. Interconnection With Other Systems

1. Prohibition on Interconnection. Water Utility shall not interconnect any part of its system supplied with water from Seattle with other water systems without the prior written approval of the Operating Board, or, in case of emergency, upon oral approval by Seattle, which shall not be unreasonably withheld. Any such interconnection shall be subject to

the approval of the Washington State Department of Health and the installation of a meter. Such other systems must be in compliance with all applicable local, State and federal laws and regulations including the requirement that they have a valid operating permit issued by the Washington State Department of Health.

2. Requests by Seattle to Interconnect. Seattle may request that Water Utility interconnect its water system to the water system of an adjacent Wholesale Customer. Water Utility shall comply with that request subject to the terms and conditions set forth below.

   a. Requirement for Interconnection. If Water Utility does not consent to Seattle's request for interconnection, Seattle may propose the interconnection of Water Utility's water system to the adjacent Wholesale Customer to the Operating Board. Water Utility may present facts and arguments to the Operating Board in opposition to the interconnection and document its costs in making the interconnection and conveying water to the adjacent Wholesale Customer. The Operating Board shall hear and consider the matter. Upon (a) a written finding by the Operating Board that the proposed interconnection with an adjacent Wholesale Customer is feasible taking into account Water Utility's capabilities, limitations, and obligations, (b) a written finding by the Operating Board that such interconnection benefits the Seattle Regional Water Supply System and (c) a written demand of the Operating Board that Water Utility carry out the interconnection, Water Utility shall be required to interconnect its facilities to the adjacent Wholesale Customer for the purpose of supplying water to that Wholesale Customer through the distribution system of Water Utility, provided that the adjacent Wholesale Customer agrees to perform the interconnection in a

location and according to a schedule which does not unduly disrupt Water Utility's operations, and to be responsible for the payment and indemnity obligations in Section III.C.2.b below.

b. Payment and Indemnity. Water Utility shall be paid its actual costs of providing such interconnection and water transmission service by the adjacent Wholesale Customer receiving the water, plus a reasonable amount for overhead, administration and rate of return (equal to Rate of Return on Investment) on such costs, and Water Utility shall be indemnified from any liability that may result from providing such interconnection by the adjacent Wholesale Customer. The Operating Board shall adopt a standard methodology for calculating costs that ensures that Water Utility is fairly compensated for such service.

III.D. Development of Regional Supply and Transmission Infrastructure

Final decisions and authority to approve construction of capital infrastructure related to the Seattle Regional Water Supply System shall rest with the Seattle City Council. Capital construction activities include, but are not limited to installations, renewals, replacements, upgrades, expansions, and any other costs included in Seattle's comprehensive capital facilities plan.

III.E. Metering Equipment

Seattle shall own and perform testing, cleaning and recalibration on appropriate metering devices and associated appurtenances to measure the amount of water delivered to Water Utility at the Service Connection pursuant to this contract. Seattle shall perform all other work at Water Utility's expense regardless of the cause provided that the cause is consistent with AWWA and

safety standards and practices. Water Utility shall operate and maintain its water system in a manner that the water flowing through the Service Connection meter operates within the normal operating range for the meter as specified by the manufacturer.

Until such time as Seattle determines it to be economical to install metering devices to measure the amount of water delivered from the Seattle Regional Water Supply System to the Seattle Retail Distribution System, the amount of water delivered to the Seattle Retail Distribution System shall be measured indirectly by subtracting the metered water delivered to all of Seattle's wholesale customers from 98% of the total amount of water exiting Seattle's sources of supply as measured by the supply meters.

SECTION IV. COST OF WATER SUPPLY & TRANSMISSION

Cost-based rates are a water industry accepted practice and the historical practice of Seattle and the Wholesale Customers. The rate-making principles, policies and methodologies set forth in this Section IV are intended to meet the objective of equitable and cost-based rates.

IV.A. Rate-making and Cost-allocation Principles

The parties will apply the following general principles and policies to the establishment of all rates, charges, and cost allocations for water supply, transmission, and related services under this contract.

1. No expenses attributable to electric power development may be allocated to the cost pools identified herein unless the pools are allocated a commensurate share of revenue derived from such development.
2. Seattle shall utilize generally accepted accounting principles, as may be amended from time to time, consistently applied as a basis for developing the financial information upon which rates and charges are based.

3. Abrupt changes in financial policies should be avoided.

4. The rate structure should encourage the efficient use of water, conservation and the timely development of new environmentally responsible water sources and should incorporate seasonal rates and other pricing approaches to encourage efficient use.

5. The rate structure should be innovative, flexible and adaptive whenever it is cost effective and beneficial in furthering the rate-making policies.

6. The rate structure should be simple to administer and easily understandable.

7. The rate structure should be fair and equitable while balancing the needs of all parties.

8. Capital costs which benefit only a new Wholesale Customer shall be allocated to that customer and not to any cost pool described in this contract.

9. Capital costs associated with improvements or facilities which benefit or serve individual Wholesale Customers or the Seattle Retail Distribution System may be allocated to a sub-regional or regional cost pool to the extent necessary to alleviate a disproportionate adverse impact to that Wholesale Customer or the Seattle Retail Distribution System from a regional or sub-regional capital improvement and where (i) such impact could have been reasonably avoided through a different project design, or (ii) the other Wholesale Customers, including the Seattle Retail Distribution System, receive tangible benefits, directly or indirectly, from the adopted capital facilities plan.

10. The Seattle Retail Distribution System shall be treated as the equivalent of a Wholesale Customer of the Seattle Regional Water Supply System for the purpose of charging Seattle the same wholesale rates and charges as Water Utility for water supply and transmission. Costs calculated under the costs pools described below shall apply to all Wholesale Customers and to the Seattle Retail Distribution System.

11. The allocation of costs associated with capital construction activities within the Seattle Regional Water Supply System shall be the responsibility of the Operating Board. The Operating Board shall use its best efforts to determine and approve a cost allocation method for infrastructure projects prior to the capital project obtaining construction approval from the Seattle City Council. Failure of the Operating Board to determine and approve a cost allocation method shall not hinder the Seattle City Council from approving capital infrastructure projects in order to assure Seattle's ability to fulfill the requirements of this contract.

12. All parties will use best efforts in establishing rates and cost allocations that reflect the rate-making and cost allocation principles set forth in this Section IV.A.

IV.B. Ratemaking Framework

Subject to the foregoing principles, wholesale rates and charges for the services described in this contract shall be developed by Seattle based on the following framework:

1. Water Supply and Transmission Service. The costs of water supply and transmission of water shall be accounted for separately in the water supply and transmission cost pools described below. The price for each service shall be recovered through separate rates for each service. All direct costs incurred in providing water supply and transmission services shall be allocated to the appropriate cost pool and recovered through the rates for each service. In addition, certain indirect costs consisting of a reasonable overhead and administration cost shall be allocated to the appropriate cost pool and recovered through rates for each service.

2. Water Supply - Basic and Elective Services. The costs of supplying water falls into two categories – basic and elective services. Basic service costs include direct and indirect

costs attributable to the delivery of water to the Wholesale Customers and to Seattle's Retail Distribution System pursuant to the foregoing principles. Elective services are optional services, such as water quality laboratory services and specific engineering support that Seattle makes available.

3. Conservation. Costs incurred by Seattle for the Regional Water Conservation Program shall be allocated to the New Supply Cost Pool and the Operating Board will determine how to recover those costs either through rates or Facility Charges "FCs" from Wholesale Customers and Seattle.

IV.C. Water Supply Pricing – Basic Services

1. Two Water Supply Cost Pools. For the purposes of determining costs of water supply, there shall be two cost pools: An existing supply cost pool ("Existing Supply Cost Pool") and a new supply cost pool (" New Supply Cost Pool").

   a. Existing Supply Cost Pool. The Existing Supply Cost Pool shall be accounted for as follows:

      i. A basic services rate for water supply shall be charged to recover the full costs of operating, maintaining, repairing, renewing and replacing the Existing Supply Resources incurred by Seattle.

      ii. All regional conservation programs undertaken by Seattle prior to January 1, 2002, shall be considered an Existing Supply Resource cost.

      iii. Renewal and replacement of Existing Supply Resources will be an Existing Supply Resource cost.

   b. New Supply Cost Pool. The New Supply Cost Pool shall be accounted for as follows:

i. Water supply resources developed after January 1, 2002 that expand the capacity of the Seattle Regional Water Supply System ("New Supply Resources"), including the costs of the Regional Water Conservation Program from January 1, 2002, shall be included in the New Supply Cost Pool. If any portion of a New Supply Resource project enhances reliability of Existing Supply Resources, the costs thereof may be allocated to the Existing Supply Cost Pool if the Operating Board and Seattle both agree.

ii. The cost of New Supply Resources plus Rate of Return on Investment may be recovered either through FCs or new supply rates charged to the holders of Full and Partial Requirements Contracts and the Seattle Retail Distribution System. The new supply rate shall be applied to all holders of Full and Partial Requirements Contracts and the Seattle Retail Distribution System.

iii. The Operating Board shall determine the portion of the New Supply Resource costs that shall be recovered through FCs or through new supply rates. The FCs and new supply rates may be scalable to create an incentive for developers to build housing or commercial units with efficient water usage levels. Water Utility, as well as each other Wholesale Customer and Seattle in setting rates for retail customers shall be free to choose the method of incorporating FCs or new supply rates into their own retail rates and charges.

iv. Holders of Full and Partial Requirements Contracts who have not purchased water from Seattle under the 1982 Water Purveyor Contract shall be assessed the full marginal costs of the operation, including Rate of Return on Investment, of the New Supply Resources. This assessment may be satisfied by either paying FCs and new supply rates or arranging a special water supply rate in lieu of paying FCs.

c. Emergency Surcharge. In the event of a drought, catastrophe, or other extraordinary condition that requires emergency expenditures to maintain a sufficient water supply, Seattle may impose an emergency surcharge on all holders of Full and Partial Requirements Contracts in order to pay for such expenditures or maintain financial stability of the Seattle Regional Water Supply System, or both. Any such emergency surcharge shall be presented to the Operating Board prior to adoption by the Seattle City Council. Seattle shall consider the comments of the Operating Board but shall nevertheless have the full authority to adopt the emergency surcharge.

IV.D. Transmission Pricing - Basic Services

1. Transmission Costs Pools. For purposes of determining the cost of the transmission of water to the Wholesale Customers there shall be two transmission cost pools consisting of an existing transmission cost pool ("Existing Transmission Cost Pool") and a new transmission cost pool ("New Transmission Cost Pool").

a. Existing Transmission Cost Pool. Costs to be allocated to the Existing Transmission Cost Pool shall consist of the following: operation, maintenance, repairs, renewals, and replacements to the Seattle Transmission Facilities.

i. The Seattle Transmission Facilities are owned and operated as a regional network by Seattle to convey water to wholesale customers and to the Seattle Retail Distribution System. Therefore, the price of transmission for water transmitted within the Seattle Transmission Facilities shall be calculated on the same basis to holders of Full and Partial Requirements Contracts and the Seattle Retail Distribution System.

ii. Costs incurred for purposes of transmission reliability may be included in the Existing Transmission Cost Pool subject to the approval of the Operating Board and Seattle.

b. New Transmission Cost Pool. The cost of new transmission facilities shall be included in the New Transmission Cost Pool. The renewal, replacement, upgrade, expansion, or modification of existing Seattle Transmission Facilities which create an expansion of transmission capacity may be allocated to the New Transmission Cost Pool. The Operating Board shall decide what portion of costs of renewal, replacement, upgrade, expansion or modification of existing Seattle Transmission Facilities may be allocated to the New Transmission Cost Pool and what portion of costs of a transmission project that extends the geographic extent of the transmission system that shall be allocated to the New Transmission Cost Pool or recovered from a new Wholesale Customer if the project benefits only that new Wholesale Customer. Except for costs allocated to a specific Wholesale Customer, New Transmission Cost Pool costs shall be recovered through new transmission rates or FCs as determined by the Operating Board. The new

transmission rate shall be applied in a uniform manner to all holders of Full and Partial Requirements Contracts and the Seattle Retail Distribution System.

2. Demand Charge

a. Seattle may adopt a demand charge in accordance with the methodology described in Exhibit III. The demand charge rate (i.e., dollars per 1000 gallons of deficient storage) shall be based on the equivalent cost of providing the deficient storage.

b. The proceeds of the demand charge will be treated in rate setting as a credit to the New Transmission Cost Pool.

c. Seattle shall suspend the demand charge rate in the event of emergencies and unforeseen conditions.

3. Cost of New or Changed Service Connection. If Seattle requests a change in the location of the Service Connection to Water Utility for the benefit of the Seattle Regional Water Supply System, then the costs, including any retirement costs of the old Service Connection, shall be included in the appropriate transmission cost pool. If Water Utility requests a new Service Connection or a change in location of an existing Service Connection, then Water Utility shall pay the costs of the new or changed Service Connection, including any retirement costs of the old Service Connection regardless of the cause provided that the cause is consistent with AWWA and safety standards and practices.

IV.E. Allocation of Costs and Revenues into Cost Pools

1. Accounting. Seattle shall maintain a cost accounting system consistent with the provisions of this contract and generally accepted accounting principles, as amended

from time to time, consistently applied in developing the financial information for determining the costs of acquisition, construction, repair, renewal, replacement, upgrade, expansion, maintenance, and operation of the facilities in each cost pool.

a. Asset Accounts. An asset account shall be maintained for each facility and within that account Seattle shall record the original cost of that facility plus betterments and less retirements.

b. Depreciation. Facilities shall be depreciated according to industry-standard water system asset lives and a record of life-to-date depreciation shall be maintained for each facility. No depreciation shall be recorded in the first calendar year of operation of a facility. A full year's depreciation shall be recorded in every subsequent year.

c. Net Book Value. The net book value of any facility shall be its original cost plus betterments and less retirements as recorded in its facility asset account, less life-to-date depreciation.

2. Infrastructure Costs. Each cost pool shall include the infrastructure costs for its respective facilities, calculated on a utility, cash or other basis depending upon the facility and the cost pool as set forth below.

a. Utility Basis. The utility basis shall be used to calculate the infrastructure costs for all Existing Supply Resources and Seattle Transmission Facilities, as well as their replacements and betterments. The utility basis may also be used for New Supply Resources and new transmission facilities in Seattle's discretion. Under the utility basis, the infrastructure cost for a facility in any year shall be the sum of (i) the annual depreciation expense recorded for that facility and (ii) the

product of the net book value of that facility and the Rate of Return on Investment.

At Seattle's discretion, interest costs may be considered current infrastructure costs during the construction of a facility. However, any such interest costs must be considered contributions in aid of construction, and not included in the Net Book Value of the facility for purposes of calculating Utility Basis costs in future years.

b. Cash Basis. The cash basis may be used in Seattle's discretion for New Supply Resources and transmission facilities or a portion thereof. Under the cash basis, the infrastructure cost for a facility in any year shall be the actual cash expenditure made by Seattle in that year for either the payment of construction costs or actual principal and interest costs on debt issued to finance its construction. In the event that the depreciation lifetime of the facility is less than the term of the debt issued to finance all or a portion of the facility, debt maturities will be selected such that the construction cost of the facility will be fully amortized at the end of its depreciation lifetime.

c. Other Basis. Seattle, with the approval of the Operating Board, may determine one or more other bases on which to calculate infrastructure costs and may apply these bases to facilities in the New Supply and New Transmission Cost Pools. Disposition of any facilities under another basis will be determined at the same time in accordance with Section IV.E.4.

3. Operations Costs. The costs of operating the assets assigned to a cost pool shall be included in the cost pool. The annual operations costs of a cost pool shall be the labor,

materials, equipment and other direct costs required for the operation, maintenance, and repair of the facilities in that cost pool, together with any net profit or expense from the disposition of facilities in that pool. Operations costs shall include the cost of general and administrative overhead applied in a manner consistent with its application to capital construction projects.

a. Existing Supply Operations Costs. The parties agree that an efficient way of handling operations costs for the Existing Supply Cost Pool shall be as follows: The operations cost base in the Existing Supply Cost Pool for the year 2010 shall be determined in accordance with the line item labeled "2010 Costs in identified activities" under Existing Supply in Note 2 – Operations Costs, Notes to the Wholesale Statements for the City of Seattle, Seattle Public Utilities, Water Fund, during the annual cost-audit process for 2010 in accordance with Section IV.E.10, which occurs by the end of 2011 and applies to all Wholesale Customers and Seattle. Seattle will notify Water Utility of the actual 2010 operations cost base in the Existing Supply Cost Pool in writing, which shall become incorporated as part of this contract at that time. In each succeeding year, the amount of the operations cost base from the previous year shall be adjusted by the percentage increase in the operations cost in the Existing Supply cost centers identified in Exhibit IX, as amended from time to time.

b. Existing Transmission Operations Costs. The parties agree that an efficient way of handling operations costs for the Existing Transmission Cost Pool shall be as follows: the operations costs base in the Existing Transmission Cost Pool for the year 2010 shall be determined in accordance with the line item labeled "2010

Costs in identified activities" under Existing Transmission in Note 2 – Operations Costs, Notes to the Wholesale Statements for the City of Seattle, Seattle Public Utilities, Water Fund, during the annual cost-audit process for 2010 in accordance with Section IV.E.10, which occurs by the end of 2011 and applies to all Wholesale Customers and Seattle. Seattle will notify Water Utility of the actual 2010 operations cost base in the Existing Transmission Cost Pool in writing, which shall become incorporated as part of this contract at that time. In each succeeding year, the amount of the operations cost base from the previous year shall be adjusted by the percentage increase in the operations cost in the Existing Transmission cost centers identified in Exhibit IX, as amended from time to time.

c. New Supply Operations Costs. The operation costs of the Regional Water Conservation Program after January 1, 2002, together with the costs of operating facilities assigned to the New Supply Cost Pool and any other costs allocated by the Operating Board, shall be assigned to the New Supply Cost Pool. The operations cost base in the New Supply Cost Pool for 2010 shall be determined in accordance with the line item labeled "2010 Costs in identified activities" under New Supply in Note 2 – Operations Costs, Notes to the Wholesale Statements for the City of Seattle, Seattle Public Utilities, Water Fund, during the annual cost-audit process for 2010 in accordance with Section IV.E.10, which occurs by the end of 2011 and applies to all Wholesale Customers and Seattle. Seattle will notify Water Utility of the actual 2010 operations cost base in the New Supply Cost Pool in writing, which shall become incorporated as part of this contract at that time. In each succeeding year, the amount of the operations cost base shall

be adjusted by the percentage increase in the operations costs in the New Supply cost centers as identified in Exhibit IX, as amended from time to time.

d. New Transmission Operations Costs. The actual costs of operating facilities assigned to the New Transmission Cost Pool and any other costs allocated by the Operating Board, shall be assigned to the New Transmission Cost Pool.

4. Disposition Costs. The costs of disposing of assets within a cost pool shall be included in the cost pool. Net disposition costs shall be calculated as follows:

a. Disposition Under the Utility Basis. The net book value of the facility, less any sales, salvage, or other revenues derived from the disposition of that facility.

b. Disposition Under the Cash Basis. The value of principal of unpaid maturities of debt used to finance the construction cost of the facility, less any sales, salvage or other revenues derived from the disposition of that facility.

c. Disposition Under Other Basis. Disposition of any facilities whose infrastructure costs are calculated on another basis under section IV.E.2.c. above shall be determined by the parties as part of the definition of such other basis.

5. Creation of Additional Cost Pools. Seattle, in its discretion, may create additional cost pools to provide equity and flexibility in payment arrangements and the allocation of costs as the Seattle Regional Water Supply System expands to include new infrastructure, operations, and customers. The costs in an additional cost pool, or a portion thereof, may be added to an existing cost pool subject to the consent of the Operating Board if the costs to be allocated satisfy the criteria for allocation to the existing cost pool.

6. Facilities Charge Revenues. Supply FC revenues, which consist of those revenues from FCs the Operating Board has determined are to recover a certain portion of New Supply

Resources costs, shall offset infrastructure costs in the New Supply Cost Pool. Surpluses and deficits in actual Supply FC revenues over costs to be recovered through the Supply FC shall be carried forward and earn simple interest at Seattle's Average Cost of Debt.

Any current-year deficit (including any surplus balance available from previous years) shall be paid by rates for the New Supply Cost Pool. New Supply Cost Pool rates shall be discounted by surplus Supply FC revenues until any deficit Supply FC balance is repaid, except the amount of this discount shall not exceed, without the agreement of the Operating Board, twice the maximum annual deficit paid by the rate for the New Supply Cost Pool in any one year.

In the event that Supply FC surplus balances exceed the Net Book Value of assets whose costs are allocated to the Supply FC, the difference between the Supply FC balance and the Net Book Value of these assets shall be used to discount the rate for the New Supply Cost Pool (and the Supply FC surplus balance shall be reduced by the amount of this discount). The use and accounting for transmission FCs shall be done in a like manner to supply FCs. Seattle and Water Utility agree that FC revenues are the sole property of Seattle.

7. Allocation of Cost Pools by Customer Class. The costs in cost pools shall be allocated within the pools as follows:

   a. Allocation of Existing Supply Cost Pool. The total cost of the Existing Supply Cost Pool shall be allocated to two customer classes as follows:

      i. Block Purchase Customer Class. The portion of costs in the Existing Supply Cost Pool allocated to holders of Block Purchase Contracts shall be determined pursuant to those contracts.

ii. Full and Partial Requirements Customer Class. The holders of Full and Partial Requirements Contracts and the Seattle Retail Distribution System shall be allocated the remaining costs in the Existing Supply Cost Pool.

b. Allocation of New Supply Cost Pool. The costs allocated to the New Supply Cost Pool shall be:

i. Block Purchase Customer Class. The holders of Block Purchase Contracts shall be allocated no costs from the New Supply Cost Pool.

ii Full and Partial Requirements Customer Class. The holders of Full and Partial Requirements Contracts and the Seattle Retail Distribution System shall be allocated all costs in the New Supply Cost Pool.

c. Allocation of Existing Transmission Cost Pool. The costs of the Existing Transmission Cost Pool shall be allocated as follows:

i. Block Purchase Customer Class. The proportion of costs in the Existing Transmission Cost Pool allocated to holders of Block Purchase Contracts shall be determined pursuant to those contracts.

ii Full and Partial Requirements Customer Class. The holders of Full and Partial Requirements Contracts and the Seattle Retail Distribution System shall be allocated the remaining costs in the Existing Transmission Cost Pool.

d. Allocation of New Transmission Cost Pool.

i. Block Purchase Customer Class. The holders of Block Purchase Contracts shall be allocated no costs from the New Transmission Cost Pool.

ii Full and Partial Requirements Customer Class. The holders of Full and Partial Requirements Contracts and the Seattle Retail Distribution System shall be allocated all costs in the New Transmission Cost Pool.

e. Allocation of Additional Cost Pools. At the time an additional cost pool is created by Seattle pursuant to Section IV.E.5, the additional cost pool will be allocated by customer class.

8. Facilities Charges. If Seattle establishes FCs as authorized herein, then such charges shall be calculated as follows:

a. ERU Definition. Seattle shall develop a definition of an Equivalent Residential Unit ("ERU") based on, meter size as set forth in Exhibit VI, number of residential units, water use, or other basis which shall be consistent with accepted industry standards. The Operating Board shall have the right to review and comment on the definition and Seattle shall consider the Operating Board's comments.

b. Record-Keeping. Water Utility shall provide Seattle with an annual accounting, in a form acceptable to Seattle, of its retail water service connections by January 31st of each year, which shall be accurate as of December 31st of the preceding year. Water Utility shall report the size of the meter and other pertinent data such as the number of residential units or square footage served or water use. Seattle shall provide Wholesale Customers with an annual accounting of its retail service connections on the same basis. Upon reasonable notice, Water Utility shall make its billing and connection records available to Seattle for inspection and copying

during normal business hours and Seattle's billing and connection records shall be made available to any Wholesale Customer on the same basis.

c. Annual Calculation of ERUs. Until such time as Seattle develops another basis, the calculation of ERUs in any year shall be the annual growth in the number of meters installed by Water Utility during the year taking into account the size of each meter.

d. Imposition of Facilities Charges. Seattle shall collect and Water Utility shall pay FCs based on the following:

i. the number of ERUs added during the previous month determined by the number of meters installed. Seattle shall pay FCs into the accounts of the Seattle Regional Water Supply System on the same basis.

ii. Seattle Report on ERUs. Seattle shall prepare and distribute a report no later than March 31st of each year showing the ERU count of the Seattle Retail Distribution System and each Wholesale Customer on such basis for the previous year and each year since the effective date of this contract.

e. Rate Setting. The structure of FCs or water rates charged to the holders of Full and Partial Requirements Contracts shall be determined by Seattle, at its sole discretion, except that the price may not, without the consent of Water Utility, be set to collect more than the costs forecast under Section IV hereof and Rate of Return on Investment. FCs shall be calculated as set forth on page 1 of Exhibit VI.

9. Cost Audit. At the end of each fiscal year, Seattle shall provide a statement of actual costs allocated to each cost pool and other costs and revenues received, which statement may be audited by an external auditor selected by the Operating Board. In addition,

Water Utility may have the statement audited by an external auditor of its choice, solely at Water Utility's expense.

10. Transition.

a. Settling the Purveyor Balance Account. The parties agree that they will settle the Purveyor Balance Account, as that term is used in Section III.I of the 1982 Water Purveyor Contract, in the following manner no later than December 31, 2011, unless the parties enter into a payment agreement in accordance with this subsection. The Purveyor Balance Account shall be credited if there is a surplus or charged if there is a deficit, to the Wholesale Customers who remained under the 1982 Water Purveyor Contract until the Effective Date of this contract. The Purveyor Balance Account as of December 31, 2010 (which will be finally audited in the 3rd quarter of 2011), shall be prorated by each of those Wholesale Customer's share of the total Purveyor demand (e.g flow) since the most recent year that the balance was at zero. There will be separate prorations for the Old Water and New Water accounts as those terms are defined in the 1982 Water Purveyor Contract. In the event the appropriate credits or charges are not or cannot be paid in full by December 31, 2011, the parties shall be entitled to pay the appropriate credits or charges over a term of up to three years with the then current interest at Seattle's Average Cost of Debt. The specific terms of any payment agreement between the parties shall be reasonable and subject to the review and approval of the parties.

b. Prior Operating Board Decisions. Water Utility acknowledges and agrees it will be bound by decisions the Operating Board has made under the authority in this

contract that have been made prior to the Effective Date of this contract so that such decisions apply to all holders of Full and Partial Requirements Contracts.

c. Application of Facilities Charges based on Meter or Connection Size. Seattle and Water Utility acknowledge and agree that Water Utility has unresolved concerns relating to guidance issued by the Operating Board in 2002 regarding the application of FCs based on meter or connection size where other requirements (e.g. operational, regulatory) may dictate the meter or connection size, and therefore, may not be an appropriate indicator of the annual demand placed on water supplies. The parties agree that circumstances have changed since that guidance was issued that warrant reconsideration of the guidance. Therefore, Seattle will initiate a discussion with the Operating Board in 2011, which Water Utility may participate in to present its concerns, and will endeavor to resolve the issue for action by the Operating Board as soon as practicable after Water Utility becomes represented by the Operating Board.

d. Waiver of Facilities Charges. Seattle shall not charge Water Utility FCs until January 1, 2012 if the amount of water it purchases from Seattle does not exceed its old water allowance under the 1982 Water Purveyor Contract. This waiver, however, shall not relieve Water Utility from the record-keeping requirement of subsection IV.E.8 above.

e. Transition Growth Surcharge. A transition growth surcharge of $0.60 per CCF shall be applied to the rates of Water Utility for delivery of water in excess of the old water allowance of the 1982 Water Purveyor Contract through December 31, 2011. The revenue from this surcharge shall be used to discount the base rates of

the holders of Full and Partial Requirements Contracts by not more than $0.16 per CCF. In the event that the revenues generated by the surcharge exceed those required to fund the discount, Seattle may keep the difference.

f. Early Contract Signing Fee. Within two months of the Effective Date of this contract, Water Utility agrees to pay to Seattle an Early Contract Signing Fee of $13,235. If Water Utility requires a longer period, it may pay the fee in monthly increments until December 2011 at 1% interest.

g. Transfer to Full and Partial Rates and Facilities Charges.

i. Within two months of the Effective Date of this contract, Seattle will: 1) make appropriate changes to its billing system to charge Water Utility for water supplied under this contract at the then current rates for Full or Partial Requirements Contracts under Seattle Municipal Code ("SMC") Section 21.04.440.E.2 ("Billing System Change Date"); and 2) credit back to Water Utility the difference between the amount Water Utility paid for water supplied at the then current rates for Water Purveyor Contracts under SMC 21.04.440.E.1 and what the Water Utility would have paid for water supplied at the then current rates for Full or Partial Requirements Contracts under SMC 21.04.440.E.2 from January 1, 2011 until the Billing System Change Date.

ii. Within two months of the Effective Date of this contract, Water Utility will submit to Seattle an accounting of the number of retail connections made to its water system between January 1, 2011 and the Effective Date of the contract and payment of any FCs at the then current FC rate under

SMC 21.04.440.E.2 that would have been paid in accordance with this contract from January 1, 2011 until the Effective Date of this contract.

h. Existing Regional Deficit. The parties acknowledge and agree that as of December 31, 2010, there may be an existing regional deficit or surplus in the running balance under Section IV.I.1 that was created by Wholesale Customers signing contracts prior to 2011 and the Seattle Regional Distribution System. Although Water Utility did not contribute to the existing deficit or surplus, it will have to pay higher or lower rates in the 2012-2014 rate period to help eliminate the deficit or surplus, respectively. In the event of a deficit, Seattle agrees to credit back to Water Utility, 70% of the amount that Water Utility will contribute to eliminating the existing deficit through higher rates. In the event of a surplus, Water Utility agrees to pay Seattle 70% of the amount that Water Utility will benefit from eliminating the existing surplus through lower rates. The actual amount of the existing deficit or surplus will be determined during the annual cost audit process for 2010, which is targeted for third quarter 2011. The amount to be credited or charged will be based on Water Utility's percentage of 2010 annual flow times the total existing regional deficit or surplus times 70%. Upon the completion of the 2010 annual cost audit process, Seattle will provide Water Utility with an accounting of the total credit or charge in writing. Beginning January 2012, Seattle will provide one or more monthly credits or charges on Water Utility's water bill until the entire credit or charge balance is paid off. Seattle or Water utility, as appropriate, will pay the entire balance by December 31, 2012. Any outstanding credit or charge balance will accrue interest at

Seattle's average cost of debt from December 31, 2010 until the entire balance is paid off.

IV.F. Elective Services

1. Water Supply Services. Seattle may provide certain elective services (e.g. conservation, engineering) to Water Utility upon request by Water Utility. Such services shall be negotiated and contracted for separately between Water Utility and Seattle.

2. Transmission Wheeling. In consultation with the Operating Board, excess transmission capacity may be made available by Seattle for a fee for purposes of wheeling water between points within the Seattle Regional Water Supply System to Water Utility or to others.

3. Water Quality. So long as Seattle owns and operates a water quality lab, Water Utility may request the services of that lab based on its published rates.

IV.G. Rate Adjustment

1. Rate Adjustment. Upon 120-days notice to Water Utility of its intent to do so, Seattle may adjust water service rates and FCs to Water Utility subject to the terms of this contract. Rate adjustments will be effected only within five years of the completion of a cost of service study to be conducted by Seattle, which shall include an analysis of the allocation of operation, maintenance and capital costs between cost pools. Such study shall be prepared in accordance with accepted industry standards. In addition, Seattle shall review the Operating Board's comments and recommendations on the rate proposal and provide a written explanation of any recommendations that are not accepted.

2. Rate Consultant. An independent rate consultant shall be selected by Seattle in consultation with the Operating Board. Detailed information and progress reports from

the consultant will be made to Water Utility during the course of the study upon drafting of each major study section directly affecting Water Utility and other Wholesale Customers. A final consultant report shall be made available to Water Utility not less than 30 days before Seattle formally transmits any resulting rate adjustment proposal to the Operating Board.

IV.H. Retail Rate-Setting

Each party to this contract shall have sole authority for establishing retail rates, connection charges and other fees and charges within its respective jurisdiction.

IV.I. Truing Actual Costs and Actual Revenues

A mechanism for reconciling revenue targets for the various cost pools and the actual revenues received during each year shall be implemented by Seattle as follows:

1. For each previously identified class of customers in each cost pool, Seattle shall maintain a running balance of the excess or deficit of actual rate revenues collected less actual expenses incurred. Each balance shall earn simple interest at the rate of Seattle's Average Cost of Debt. At the end of each year, each balance shall be adjusted to reflect the operating results of that year. The statement of these balances shall be reviewed and approved by an external auditor.
2. FC balances shall be carried forward as set forth in Section IV.E.6.
3. Each wholesale rate study shall adjust rates to eliminate the cost pool balances. ERU fees shall be based on the costs of increments in supply and transmission capacity, and shall not be adjusted to reflect surpluses or deficits in FC revenues.

SECTION V. **OPERATING BOARD**

1. Purpose. The purpose of the Operating Board is to provide certain limited authority to a board of representatives over policy and operational matters as they affect the Seattle Regional Water Supply System.

2. Structure and Authority. The Operating Board shall have the powers and authority as set forth herein. Exhibit IV describes the structure and authority of the Operating Board. In the event of a conflict between provisions of this contract which grant specific powers to the Operating Board and Exhibit IV, such grants of specific powers shall control.

3. Review. The structure and authority of the Operating Board may be reviewed as of January 1, 2012 and every five years thereafter to determine its effectiveness in addressing regional and contractual issues. The review may address the composition of the Board and its powers and authority as set forth herein and in Exhibit IV, provided that notwithstanding any other term or provision of this contract, Seattle shall not have the power to disband the Operating Board nor take away or diminish the powers vested in the Operating Board as set forth in Sections II, III and IV of this contract. Either party may initiate the review. The reviewing party shall provide the other with its comments and proposals. The parties agree to consider the other party's comments and proposals and to respond in writing stating its reasons for rejecting any proposals and the reasons for its own counter-proposal. After consideration of all comments and proposals at each five year interval, Seattle may make changes in the structure and authority of the Operating Board that are not inconsistent with the provisions of this subsection.

SECTION VI. PLANNING

VI.A. Reporting of Planning Data

1. By no later than April 1 of each year, Water Utility shall report to Seattle and the Operating Board as follows:

   a. Its annual and peak day total system demand for each year, during the term of this contract, as of December 31st of the previous year.

   b. Its forecast of Full or Partial Water Requirements, as appropriate, for the year including estimates of annual water consumption and maximum 24-peak demand for the ensuing calendar year, and for the fifth, tenth, and fifteenth year in the future. Such forecasts shall reflect the best judgment of Water Utility.

2. Water Utility shall report other data relating to water supply and demand as may be reasonably requested by Seattle for water planning purposes.

3. Records relevant to water supply and consumption within the possession of Seattle or Water Utility shall be provided to the other upon reasonable request.

VI.B. Submittal of Water Utility Water System Plans

Water Utility shall provide a copy of its water system plan, including any amendments, to Seattle for review.

VI.C. Seattle as Water Planning Agency

Seattle shall be the lead agency and primary planning authority for the purposes of fulfilling its obligations to provide for the Full or Partial Water Requirements of Water Utility, as appropriate. Seattle, in consultation with the Operating Board, shall examine and investigate water supplies suitable and adequate to meet the present and reasonable future needs of Seattle and the

Wholesale Customers. Seattle shall prepare and adopt a plan for acquiring such water supplies in a timely fashion. The plan shall provide for the lands, waters, water rights and easements necessary therefor, and facilities for retaining, storing and delivering such waters, including dams, reservoirs, aqueducts and pipelines to convey same throughout the Seattle Regional Water Supply System. In preparing or adopting the plan, Seattle shall consider as possible alternatives or additional water supply sources, the acquisition of water from sources controlled or developed by individual water utilities, legally constituted groups of water utilities or utilities which are not presently supplied by the Seattle Regional Water Supply System. Seattle has final responsibility for the plan and for fulfilling the obligations of this contract. However, the Operating Board may participate in developing the plan by proposing goals and objectives for the Seattle Regional Water Supply System, by making any additional suggestions and by acting in a review capacity.

VI.D. Comprehensive Capital Facilities Plan

Before ordering any major improvements to fulfill the requirements of this contract, Seattle shall adopt and maintain a comprehensive capital facilities plan for the Seattle Regional Water Supply System, which provides for such improvements. Any capital facilities plan adopted by Seattle for the Seattle Regional Water Supply System shall comply with and implement the Rate-making and Cost Allocation Principles in Section IV.A of this contract. This plan shall identify any reasonable costs for capital improvements to alleviate a disproportionate adverse impact to the distribution system(s) of Water Utility, another Wholesale Customer represented on the Operating Board or Seattle, to the extent it is caused by a capital improvement in the capital facilities plan for the Seattle Regional Water Supply System. When such plan is updated or amended, it shall be reviewed by the Operating Board prior to submission to the Seattle City Council. The Operating Board shall respond within 60 days of receipt of the plan, or its approval

shall be presumed to be given. The response submitted by the Operating Board regarding facilities substantially affecting Water Utility and other Wholesale Customers shall be seriously considered by Seattle. Seattle shall reply to the Operating Board within 90 days with its comments. The Operating Board and Seattle shall use their best efforts to arrive at a mutually acceptable plan.

VI.E. Emergency Planning

An emergency plan shall be prepared and maintained by Seattle as part of its Water System Plan to provide for water supply in the event of drought or disaster. Such plan shall be prepared pursuant to the procedure outlined in Section VI.D. Water Utility shall use reasonable efforts to comply with the provisions of such plan, or alternatively, Water Utility may adopt its own emergency plan if it believes it is prudent to do so.

SECTION VII. PAYMENT

VII.A. Collection of Money Due City

Seattle shall bill Water Utility on a monthly basis for all charges due under this contract. Water Utility shall pay such charges within 60 days of the billing date.

VII.B. Penalties for Late Payment

All late payments, and any refund of an amount in dispute that was paid under protest, shall accrue interest at 1% per month.

VII.C. Billing Disputes

Water Utility may dispute the accuracy of any portion of charges billed by Seattle by notifying Seattle in writing within the 60-day payment period of the specific nature of the dispute and paying the undisputed portion of the charges. This provision is not intended to limit Water

Utility's right to dispute billing errors or charges that are not reasonably discoverable by Water Utility within the 60-day payment period.

Seattle shall consider and decide any billing dispute in a reasonable and timely manner. Any billing disputes that remain after such consideration shall be reconciled pursuant to the dispute resolution procedures of this contract.

SECTION VIII. **CONTRACT AMENDMENTS**

Seattle shall notify Water Utility and all other holders of Full or Partial Requirements Contracts of any amendments to such contracts within 30 days of the execution of such amendment. Water Utility shall then have 90 days to decide whether to include such amendment in this contract by giving written notice to Seattle of its election to do so. Upon the issuance of such notice, Seattle shall issue the amendment to Water Utility and the amendment shall be final and binding upon both parties upon mutual execution.

SECTION IX. **DISPUTE RESOLUTION**

Dispute resolution shall proceed as follows:

IX.A. Operating Board Review

Any dispute regarding this contract that remains unresolved after good faith negotiations between Water Utility and Seattle shall be referred to the Operating Board for consideration and recommendation. Each party shall submit a written statement regarding the dispute to the Operating Board.

1. If the dispute cannot be resolved in discussions with the Operating Board, then the Operating Board shall provide written recommendations to each party within 60 days of the above submittal setting forth its interpretation of the applicable facts and law.

2. If either party rejects the written recommendation of the Operating Board, that party shall, within 10 days, notify the other party in writing of its reasons.

IX.B. Seattle City Council Review

The written statements of the parties, the recommendations of the Operating Board, if applicable, and the written reasons for either party's rejection of those recommendations shall then be submitted to the Seattle City Council for review.

1. Within 60 days of the submittal of the written materials, the Seattle City Council shall provide written recommendations to resolve the dispute.
2. If either party rejects the written recommendation of the Seattle City Council, that party shall, within 10 days, notify the other party in writing of its reasons.

IX.C. Non-binding Mediation

Within 10 days of receiving the written rejection of the Seattle City Council's recommendations by one or both parties, each party shall designate in writing not more than 5 candidates it proposes to act as a non-binding mediator.

1. If the parties cannot agree on one of the mediators from the combined list within 5 days, the Operating Board shall, within an additional 5 days, select one of the mediators from either list to serve as mediator.
2. Upon selection of the mediator, the parties shall use reasonable efforts to resolve the dispute within 30 days with the assistance of the mediator.

IX.D. Resort to Litigation

If mediation fails to resolve the dispute within 30 days of selection of the mediator, the parties may thereafter seek redress in court subject to Section X.H below.

IX.E. EFFICIENCY OF REVIEW

In order to facilitate a more efficient review of disputes under this Section, the Parties agree to skip the step in Section IX.A above in order to avoid a redundant act. The Parties may also mutually agree to skip the step in Section IX.C, if it is in the best interests of the Parties in resolving the dispute.

SECTION X. MISCELLANEOUS

X.A. Notification

Whenever written notice is required by this contract, that notice shall be given to the following representatives by actual delivery or by the United States mail (registered or certified with return receipt requested,) addressed to the respective party at the following addresses or a different address hereafter designated in writing by the party):

SEATTLE:	WATER UTILITY:
Director	Public Works Manager
Seattle Public Utilities	City of Duvall
Seattle Municipal Tower	PO Box 1300
700 Fifth Ave., Suite 4900	Duvall, WA 98019
PO Box 34018	
Seattle, WA 98124-4018	

The date of giving such notice shall be deemed to be the postmarked date of mailing.

X.B. Severability

The purpose of this contract is to provide for long-term water supply planning and certainty for both Seattle and Water Utility through adoption of orderly plans calling for the expenditure of significant sums of money for regional water supply and transmission facilities. It is the intent of the parties that if any provision of this contract or its application is held by a court of competent jurisdiction to be illegal, invalid, or void, the validity of the remaining provisions of this contract or its application to other entities, or circumstances shall not be affected. The remaining provisions shall continue in full force and effect, and the rights and obligations of the parties shall be construed and enforced as if the contract did not contain the particular invalid provision; provided, however, if the invalid provision or its application is found by a court of competent jurisdiction to be substantive and to render performance of the remaining provisions unworkable and non-feasible, is found to seriously affect the consideration and is inseparably connected to the remainder of the contract, the entire contract shall be null and void.

X.C. Consent

Whenever it is provided in this contract that the prior written consent or approval of either party is required as a condition precedent to any actions, in each such instance said consent or approval shall not be unreasonably withheld, and in each such instance where prior consent is sought, failure of the party to respond in writing within 90 days of the request shall be deemed as that party's consent or approval unless expressly stated herein. This provision does not apply to requests for amendments of this contract.

X.D. Emergency Situations

Nothing in this contract shall be deemed to preclude either party from taking necessary action to maintain or restore water supply in emergency situations and such action shall not be deemed a violation of this contract.

X.E. No Joint Venture - Individual Liability

This is not an agreement of joint venture or partnership, and no provision of this contract shall be construed so as to make Water Utility individually or collectively a partner or joint venturer with any other Wholesale Customer or with Seattle. Neither party is an agent of the other. Neither Seattle nor Water Utility shall be liable for the acts of the other in any representative capacity whatsoever.

X.F. Complete Agreement

This contract represents the entire agreement between the parties hereto concerning the subject matter hereof. This contract may not be amended except as provided herein.

X.G. Relinquishment of Prior Contract

Upon the Effective Date of this contract, Water Utility relinquishes its then existing 1982 Water Purveyor Contract with Seattle and the terms and conditions of that 1982 Water Purveyor Contract shall have no further force and effect.

X.H. Venue, Jurisdiction and Specific Performance

In the event of litigation between the parties, venue and jurisdiction shall lie with the King County Superior Court of the State of Washington. The parties shall be entitled to specific performance of the terms hereof.

X.I. Default

In the event of default of any provision of the contract, the non-defaulting party shall issue written notice to the other party setting forth the nature of the default. If the default is for a monetary payment due hereunder, the defaulting party shall have thirty (30) days to cure the default. In the event of other defaults, the defaulting party shall use its best efforts to cure the default within ninety (90) days. If such default cannot be reasonably cured within such ninety (90) day period, the defaulting party shall, upon written request prior to the expiration of the ninety (90) day period be granted an additional sixty (60) days to cure the default.

X.J. Force Majeur

The time periods for the parties' performance under any provisions of this contract shall be extended for a reasonable period of time during which a party's performance is prevented, in good faith, due to fire, flood, earthquake, lockouts, strikes, embargoes, acts of God, war and civil disobedience. If this provision is invoked, the parties agree to immediately take all reasonable steps to alleviate, cure, minimize or avoid the cause preventing such performance, at their sole expense.

X.K. Successors

This contract shall inure to the benefit of and be binding upon the parties and their successors and assigns.

X.L. Exhibits

Exhibits I through X are attached hereto and are hereby incorporated by reference as if set forth in full herein.

SIGNATURE PAGE

IN WITNESS WHEREOF, the parties hereby execute this contract.

THE CITY OF DUVALL

BY: _____

TITLE: _____

DATE _____

AUTHORIZING LEGISLATION: ORDINANCE/RESOLUTION _____

THE CITY OF SEATTLE

BY: _____
Director, Seattle Public Utilities

DATE: _____

AUTHORIZING LEGISLATION: ORDINANCE No.

SIGNATURE PAGE

IN WITNESS WHEREOF, the parties hereby execute this contract.

THE CITY OF DUVALL

BY: _____

TITLE: Mayor, City of Duvall

DATE 3/24/11

AUTHORIZING LEGISLATION: ORDINANCE/RESOLUTION AB11-14

THE CITY OF SEATTLE

BY: _____
Director, Seattle Public Utilities

DATE: 5/5/11

AUTHORIZING LEGISLATION: ORDINANCE No.

LIST OF EXHIBITS

I. Contract Sections II.B and III.B list

II. Service Connections, Minimum Hydraulic Gradients, and Maximum Flow Rates of Water Supplied

III. Demand Charge Methodology

IV. Operating Board Structure

V. Reserved

VI. Calculation of ERUs as a Part of Facilities Charges

VII. Seattle Supply Facilities

VIII. Seattle Transmission Facilities

IX. Cost Centers used for Operations Cost Indexes

X. Water Utility Service Area

EXHIBIT I

List of documents, commitments, adjustments, reductions, agreements, and/or written approvals by Seattle regarding the supply, purchase or resale of water according to Sections II.B. and III.B of this Contract:

1. Intertie Agreements:

Entity/location	Meter Size	Capacity	Type of Service	Comment
City of Duvall near intersection of Big Rock Road and Tolt River Pipeline	--	As needed	Continuous	See Below*

2. Independent Well Sources:

3. Water Supply Contracts To Other Water Utilities:

*The City has an intertie with the Water District 119 from which five customers of the District are supplied in an area not yet connected to the District's main system. This will eventually become an emergency intertie with Water District 119 when the District mains are further extended to that location.

SERVICE CONNECTIONS, MINIMUM HYDRAULIC GRADIENTS, AND MAXIMUM FLOW RATES OF WATER SUPPLIED

SERVICE CONNECTION[1]				MINIMUM HYDRAULIC GRADIENT FOR PLANNING PURPOSES AT STATION UPSTREAM OF METER (FEET NAVD-88 Datum)	MAXIMUM FLOW RATE UP TO WHICH THE MINIMUM HYDRAULIC GRADIENT APPLIES (gpm) [3,4]
LOCATION	STATION NUMBER [2]	PIPELINE SEGMENT NUMBER[2]	SIZE OF METER (IN.)		
Tolt Pipeline & Big Rock Road NE	112	23	6	645	1,800
Tolt Pipeline near Pipeline station 714 (275 Ave NE)	111	23	4	640	backup
				TOTAL:	1,800

Notes:

(1) Water is provided to Service Connections at a Wholesale Level of Service.

(2) Station and Pipeline Segment Numbers pertain to cost allocations and the demand metering program.

(3) City of Seattle's estimate of Water Utility's average daily demand for 2030 with a peaking factor of 2.0 for peak day use.

(4)

EXHIBIT III

DEMAND CHARGE METHODOLOGY

The policy of Seattle Public Utilities is to supply water to its Wholesale Customers at, as near as is practical, the twenty-four hour average flow rate, during the peak demand season (June through August). To comply, the Wholesale Customers have to construct adequate storage volume within their individual systems, or sometimes collectively, so as to avoid excessive peak flow withdrawals from the Seattle Transmission Facilities. The Demand Metering Program is established to set performance standards, and to monitor the Wholesale Customer's compliance with this policy. If an individual Water Utility exceeds the prescribed threshold, a "demand charge" is calculated.

Except where other agreements supersede the provisions of this contract, each Water Utility shall be subject to a demand charge based on effective deficient storage, as determined by the peak instantaneous flow rate, and the equivalent financing costs to provide storage. The demand charge rate (i.e., dollars per 1000 gallons of deficient storage) shall be based on the equivalent cost of providing the deficient storage. This rate will be determined as part of each rate study.

The Demand Metering Program is charged with implementation of the "demand charge" methodology. It shall be the responsibility of Seattle, in consultation with the Operating Board, to determine the appropriate means to achieve the program's purpose. The options that may be considered range from temporary suspension on a year by year basis to full activation, as described below.

There shall be no requirement for Seattle to install demand-metering equipment at each Service Connection in order to assess a demand charge. Seattle may choose to apply "demand metering" selectively to certain parts of the Seattle Transmission Facilities that are designated as "critical" from the standpoint of hydraulic capacity or other operational considerations. Seattle may choose to apply "demand metering" intermittently in various parts of the Seattle Transmission Facilities for the purpose of monitoring for compliance by individual Wholesale Customers or groups of Wholesale Customers on a given line segment.

EXHIBIT IV

OPERATING BOARD STRUCTURE

1. Structure. The Operating Board (or "Board") shall be structured as follows:

   a. The Board shall consist of seven (7) members, composed of three members representing Seattle Public Utilities (SPU), three members representing Seattle's Wholesale Customers selected as described below and one independent party selected as set forth below to be a tie-breaker as needed. Board members shall, to the best of their ability, act in the best interests of the Seattle Regional Water Supply System as a whole and shall not represent the interest of a group of utilities or an individual utility.

   b. The term of each Board position shall commence on January 1 and shall be for four (4) years. Terms of each Board position shall be staggered such that no more than two positions are renewed in any single year. Board members may serve not more than three successive terms.

   c. Three Board members representing the Wholesale Customers will be selected from the holders of Full and Partial Requirements Contracts . Wholesale Customers will be sorted into three categories based on utility size. The selected categories will be small, medium and large utilities, which will be made up from approximately equal numbers of holders of Full and Partial Requirements Contracts. Each category of utility may elect, by majority vote (one vote per utility) its representative to the Operating Board. The Board will be recomposed on January 1, 2012 and every 5 years thereafter.

   d. The seventh member of the Board shall be a person having expertise in the operations of regional water supply systems. Such person shall be selected by majority vote of the other Board members. In the event of a deadlock in selecting the independent representative, the independent Board member shall be selected by Judicial Arbitration and Mediation Services Inc., of Seattle, Washington or its successor. The seventh member shall not vote on issues coming before the Board unless there is a deadlock in the voting among the other six Board members. The seventh member may nevertheless express his or her opinions in Operating Board discussions. Such member shall have no employment, financial or contractual relationship with Seattle nor any Wholesale Customer or any other actual or apparent conflict of interest in holding this position.

2. Voting. Except as otherwise provided above, each member of the Board shall have one vote on all matters coming before the Board. Each Board member may appoint an alternate to vote in his or her absence. A quorum of four (4) Board members present shall be required for any vote. Members of the Board may not grant proxies for any vote.

3. Chairperson. The Board shall have a Chairperson who will be selected and have duties as defined below:

   b. The Chairperson shall be selected at the first regularly scheduled meeting of each new year.

c. All Chairpersons shall be selected by the Board using a nomination and voting process.

d. Nomination for the position of Chairperson shall be taken from Board members. The Chairperson shall be selected based upon the simple majority vote of Board members. Should the Board fail to elect a Chairperson at the first regularly scheduled meeting of the new year, a designated representative from SPU shall be the Acting Chairperson until such time as the Board elects a Chairperson.

e. The Chairperson shall have the responsibility to call meetings, determine the agenda and preside over meetings. In the absence of the Chairperson, for whatever reason, a designated representative from SPU shall be the Acting Chairperson for that meeting. The Chairperson shall also act as the spokesperson for the Board and liaison between the Administrator and the Seattle City Council's Committee on Seattle Public Utilities & Neighborhoods or successor committees.

4. Schedule/Procedures. The Board shall adopt a regular meeting schedule and notify all Wholesale Customers of the schedule. The Operating Board may adopt it own internal procedures. The latest edition of Roberts Rules of Order shall, in the absence of agreement by the Operating Board on procedural matters, govern all meetings and votes of the Operating Board.

5. Reporting. The Board will provide reports to the Wholesale Customers and to the Seattle City Council Committee on Seattle Public Utilities & Neighborhoods, or successor City Council committee, on its decisions and recommendations in a timely manner.

6. Responsibilities and Authority of the Board. Where no clear responsibility or authority on an issue is established in this contract the responsibility and authority shall rest with the Seattle City Council.

7. Expenses. The Board shall be authorized to incur reasonable expenses which will be allocated by the Board to either or both of the New Transmission or Supply Cost Pools.

EXHIBIT V - RESERVED

EXHIBIT VI

Calculation of ERUs as a Part of Facilities Charges

The ERU Fee is:

- the flat debt service payment required to finance the facility providing the ERU over the lesser of (i) the facility life or (ii) the period over which new demand will fully utilize the facility's supply

- divided by -

- the number of new ERUs of demand expected in each year.

Seattle's Average Cost of Debt shall be used as the interest rate in this calculation. In the event that several New Supply Resources are added simultaneously, the facilities may be considered together as providing a total new supply capacity for a total construction cost.

Example: A new facility costing $100 million is built with a capacity of 100,000 ERUs. Growth of 5,000 ERUs per year is expected over the next 20 years, so the facility is projected to be supplying its full capacity in 20 years. Were this facility financed over 20 years at 6% interest, the flat annual debt service payment would be $8.7 million. Each ERU would cost 0.02% of this annual amount, or about $1,740.

At the time a New Supply Resources is added, the ERU price for this supply shall be calculated. This ERU price shall then be averaged with the then-current ERU Fee. This average shall be weighted by the number of unpurchased ERUs available at the then-current ERU fee and the number of new ERUs being added at the new ERU price. This weighted average shall be the new ERU Fee, and the number of ERUs available at the fee shall be the sum of the unsold ERUs at the previous fee and the ERU capacity of the new facility.

Example: 10 years ago, a $100 million facility was constructed that can supply 100,000 ERUs. Growth and demand projections have proven accurate, and now 50,000 ERUs have been purchased, each for $1,740. The facility also has an additional 50,000 ERUs still available at the same price. This year, we construct a facility worth $70 million, with a capacity of 40,000 ERUs. Based on demand projections, this facility (on its own) would be fully utilized in 10 years, and its ERU price is therefore $2,375. The average price of any of the 90,000 available ERUs is therefore $2,022.

EXHIBIT VI

ERUs by Connection Size

Connection Size	Number of ERUs
¾" and smaller	1
1"	2
1 1/2"	5
2"	8
3"	22
4"	31
6"	66
8"	112
10"	169
12"	238

ERU Proving Methodology

The size of the water service connection used to serve an establishment depends upon both the total demand of that establishment and the instantaneous flow required by that establishment. For this reason, connection size is only a general indicator of the annual demand placed on water supplies by the establishment.

EXHIBIT VII

Seattle Supply Facilities

1. **Cedar Source**
   - All roads, buildings, structures, water supply facilities, recreational and educational facilities, and fisheries enhancement and mitigation facilities located within or close to the Cedar River Hydrographic Watershed boundary as defined by Seattle land ownership, including the land itself, and any capitalized studies related to the above. Excepted are facilities solely owned by Seattle City Light for the purpose of power generation. Facilities shared by Seattle City Light and Seattle Public Utilities shall be part of the Seattle Regional Water Supply System only to the extent of SPU share or responsibility.
   - All facilities located within the Lake Youngs Reservation as defined by Seattle ownership of the land except for conveyance facilities used to transport finished water during non-emergency operation
   - All facilities located within the Lake Youngs Aqueduct, the Landsburg Tunnel, and the Lake Youngs Supply Lines right-of-way, including the right-of-way itself
   - Existing Morse Lake Floating Pump Stations

2. **Tolt Source**
   - All roads, buildings, structures, water supply facilities, recreational and educational facilities, and fisheries enhancement and mitigation facilities located within or close to the South Fork Tolt River Hydrographic Watershed boundary as defined by Seattle land ownership, including the land itself, and any capitalized studies related to the above. Excepted are facilities solely owned by Seattle City Light for the purpose of power generation. Facilities shared by Seattle City Light and Seattle Public Utilities shall be part of the Seattle Regional Water Supply System only to the extent of SPU share or responsibility.
   - Tolt Treatment Facility

3. **Seattle Wellfields**
   - Riverton Wells, including all pumping and treatment equipment, original yard piping, to the connection to CRPL4, and the low flow piping to Riverton Reservoir
   - Boulevard Well, including all pumping and treatment equipment, and all piping up to the connection to CRPL4

4. **Other**
   - One Percent Conservation Program through December 31, 2001
   - GIS Projects related to facilities identified herein as part of the Seattle Regional Water Supply System

EXHIBIT VIII

Seattle Transmission Facilities

1. Pipelines

- Tolt Pipeline No. 1 from the Tolt Regulating Basin to Lake Forest Reservoir, including any transfer and ancillary small diameter parallel pipes
- Tolt Pipeline No. 2 (where constructed), including any transfer and ancillary small diameter parallel pipes
- Tolt Tieline
- Tolt Eastside Supply Line (from TESS Junction to the intersection of SE 16th ST and 145th Place SE)
- Tolt Eastside Line Extension (from the intersection of SE 16th ST and 145th Place SE to Eastside Reservoir)
- The 540 head Pipeline from Maple Leaf Reservoir to Lake Forest Reservoir
- Lake Youngs Bypass No. 4 from the outlet of each of the Cedar Treatment Facility clearwells to Control Works
- Lake Youngs Bypass No. 5 from the outlet of each of the Cedar Treatment Facility clearwells to the Lake Youngs Tunnel
- The Lake Youngs Tunnel (from the original lake outlet to Control Works)
- The Maple Leaf Pipeline (from the intersection of 18th Avenue E. and E. Prospect Street to Maple Leaf Reservoir)
- Cedar River Pipeline No. 1 from Control Works to Volunteer Reservoir
- Cedar River Pipeline No. 2 from Control Works to Lincoln Reservoir
- Cedar River Pipeline No. 3 from Control Works to the intersection of 18th Avenue E. and E. Prospect Street
- 30" intertie between Cedar River Pipelines 2 and 3 in east Olive Street
- Cedar River Pipeline No. 4 from Control Works to the West Seattle Pipeline
- Cedar Eastside Supply Line (from the Cedar Wye to the intersection of SE 16th St and 145th Place SE)
- West Seattle Pipeline from Augusta Gatehouse to Cedar River Pipeline 4
- The 8th Avenue S. Pipeline between S. 146th Street and S. 160th Street
- The Bow Lake Pipeline (between 8th Avenue S. and CRPL 4, and as relocated outside runways at Seatac Airport)
- The Burien Feeder (in S. 146th Street between 8th Avenue S. and CRPL 4)
- The Fairwood Line (between Fairwood Pump Station and Soos Reservoirs)
- The 24-inch discharge pipeline of Lake Youngs Pump Station up to Soos Reservoirs
- The 12-inch discharge pipeline of Lake Youngs Pump Station up to Soos Reservoirs
- The 630 head pipeline between Lake Youngs Pump Station and the Cedar River WSD pump station at the eastern boundary of the Lake Youngs Reservation

2. Reservoirs, Tanks, and Standpipes, including overflow pipes, all valves, appurtenances, and disinfection facility located on the premises of each storage facility, unless otherwise noted

- Lake Forest Reservoir
- Eastside Reservoir
- Riverton Reservoir
- Maple Leaf Reservoir (excluding Roosevelt Way Pump Station and its suction and discharge piping, Maple Leaf Tank and 520 zone piping, except where solely serving the disinfection facility)
- Soos Reservoirs

3. Pump Stations, Major Valve Structures, and other Facilities

- Eastgate Pump Station
- TESS Junction Pump Station
- Lake Hills Pump Station
- Maplewood Pump Station
- Maple Leaf Pump Station
- Bothell Way Pump Station
- Fairwood Pump Station
- Lake Youngs Pump Station
- The Control Works
- Augusta Gatehouse

4. Service Connections to Wholesale Customers installed before January 1, 2002 are part of the Seattle Transmission Facilities. Service Connections to Wholesale Customers installed after December 31, 2001shall not be part of the Seattle Transmission Facilities.

The Seattle Transmission Facilities include all necessary and convenient appurtenances, including, but not limited to, rights of way, line valves, system meters, and remote automation devices.

Cost Centers Used for Operations Cost Indices

The following costs centers or successor cost centers, as reflected in the amended Exhibit IX, and as amended further from time to time, that capture the direct costs of operation of Existing Supply Facilities, Seattle Transmission Facilities and the Regional Water Conservation Program shall be used as the indices for operations cost in the Existing Supply Cost Pool, Existing Transmission Cost Pool and for the Regional Water Conservation Program in the New Supply Cost Pool.

Supply

Program	Project	Project Name	Activity
Communications	N1203	Communications Activity Group	N120304 Purveyor Relations
Audit & Accounting	N3303	Customer Audit	N330303 Purveyor Audit
Watershed Management	N5401	Program Management	N540194 Department Support
Watershed Management	N5401	Program Management	N540195 General Expense
Watershed Management	N5401	Program Management	N540196 General Management
Watershed Management	N5401	Program Management	N540197 Training
Watershed Management	N5401	Program Management	N540198 Safety
Watershed Management	N5401	Program Management	N540199 Personnel
Watershed Management	N5401	Program Management	N540289 Capital Purchase
Watershed Management	N5403	Support Services	N540301 Modified Duty
Watershed Management	N5403	Support Services	N540302 Procuring/Paying/Receiving
Watershed Management	N5403	Support Services	N540303 Vehicle Equipment Downtime
Watershed Management	N5404	Watershed Protection	N540401 Hydrological Data Collection
Watershed Management	N5404	Watershed Protection	N540402 Fire Protection
Watershed Management	N5404	Watershed Protection	N540403 Inspection
Watershed Management	N5404	Watershed Protection	N540404 Boundaries
Watershed Management	N5405	Facility Management	N540501 WS Grounds
Watershed Management	N5405	Facility Management	N540502 WS Buildings
Watershed Management	N5405	Facility Management	N540503 WS Facilities & Roads
Watershed Management	N5406	Watershed Road Maintenance	N540601 Grade/Gravel/Ditching
Watershed Management	N5406	Watershed Road Maintenance	N540602 Bridges/Streams Culvert
Watershed Management	N5406	Watershed Road Maintenance	N540603 Roads/Row/Vegetation Cutting
Watershed Management	N5406	Watershed Road Maintenance	N540604 Tolt Roads & Streams
Watershed Management	N5407	Watershed Operations Support	N540701 Veh/Equipment Management
Watershed Management	N5407	Watershed Operations Support	N540702 Veh/Equip/Tool Repair
Watershed Management	N5408	Water Quality & Hydrology	N540801 Water Quality Monitoring
Watershed Management	N5408	Water Quality & Hydrology	N540802 Hydrological Monitoring
Watershed Management	N5409	Public/Cultural Programs	N540901 Recreation Planning
Watershed Management	N5409	Public/Cultural Programs	N540902 Management & Research
Watershed Management	N5409	Public/Cultural Programs	N540903 Watershed Education
Watershed Management	N5409	Public/Cultural Programs	N540904 Watershed Public Information
Watershed Management	N5410	Wildlife & Fisheries Programs	N541001 Program Planning & Evaluation
Watershed Management	N5410	Wildlife & Fisheries Programs	N541002 Interagency/Public Involvement
Watershed Management	N5410	Wildlife & Fisheries Programs	N541003 Ecological Monitoring & Research
Watershed Management	N5410	Wildlife & Fisheries Programs	N541004 Habitat & Species Inventory
Watershed Management	N5410	Wildlife & Fisheries Programs	N541005 Habitat Enhancement/Restoration
Watershed Management	N5411	Resource Information Mgmt	N541101 Program Plan/Evaluation
Watershed Management	N5411	Resource Information Mgmt	N541102 Information Maintenance

Program	Project	Project Name	Activity
Watershed Management	N5411	Resource Information Mgmt	N541103 Information Services
Watershed Management	N5412	Special Projects	N541202 Silviculture
Watershed Management	N5412	Special Projects	N541205 Land Exchanges/Acquisitions
Watershed Management	N5415	Cedar HCP	N541501 ASSESS OF EXPAND FOREST STAND
Watershed Management	N5415	Cedar HCP	N541502 ASSESS EXPAND FOREST ATTRIBUTE
Watershed Management	N5415	Cedar HCP	N541503 AUGMENT FOREST HABITAT INV
Watershed Management	N5415	Cedar HCP	N541504 LONG-TERM FOREST HABITAT
Watershed Management	N5415	Cedar HCP	N541505 OLD-GROWTH CLASSIFICATION
Watershed Management	N5415	Cedar HCP	N541506 RIPARIAN RESTOR PROJECT MONIT
Watershed Management	N5415	Cedar HCP	N541507 UP0LAND FOREST RESTOR PROJ MONT
Watershed Management	N5415	Cedar HCP	N541515 GIS DATA COMPATIBILITY STUDY
Watershed Management	N5415	Cedar HCP	N541516 FOREST HABITAT MODELING
Watershed Management	N5415	Cedar HCP	N541517 SPECIE HABITAT RELATION MODEL
Watershed Management	N5416	Cedar HCP	N541601 CRHCP GIS SUPPORT
Watershed Management	N5416	Cedar HCP	N541603 CRHCP TECHNICAL SUPPORT
Watershed Management	N5417	Cedar HCP	N541701 ROAD MAINTENANCE
Watershed Management	N5418	Cedar HCP	N541801 EXPERIMENTAL STREAM MONITORING
Watershed Management	N5418	Cedar HCP	N541802 LONG-TERM STREAM MONITORING
Watershed Management	N5418	Cedar HCP	N541803 AQUATIC RESTORATION MONITORING
Watershed Management	N5418	Cedar HCP	N541804 BULL TROUT SURVEYS (ADULT)
Watershed Management	N5418	Cedar HCP	N541805 BULL TROUT SPAWNING SURVEY
Watershed Management	N5418	Cedar HCP	N541806 BULL TROUT FRY/JUVENILE SURVEY
Watershed Management	N5418	Cedar HCP	Riparian Zone Studies
Watershed Management	N5418	Cedar HCP	N541809 BULL TROUT STREAM DISTRIBUTION
Watershed Management	N5418	Cedar HCP	N541810 BULL TROUT REDD INUNDATION STU
Watershed Management	N5418	Cedar HCP	N541811 COMMON LOON MONITORING
Water Quality & Supply	N5503	Water System Operations	N550301 Water Management
Water Quality & Supply	N5503	Water System Operations	N550302 Water System Control
Water Quality & Supply	N5503	Water System Operations	N550303 Anadromous Fishery Mgmt
Water Quality & Supply	N5503	Water System Operations	N550304 SCADA Management
Water Quality & Supply	N5503	Water System Operations	N550305 Highline Well Field
Water Quality & Supply	N5503	Water System Operations	N550306 Morse Lake PS
Water Quality & Supply	N5503	Water System Operations	N550307-SAFETY PROCESS MGMT COMPLIANCE
Water Quality & Supply	N5503	Water System Operations	N550308-EPA RISK MGMT COMPLIANCE
Water Quality & Supply	N5504	Water System Analysis	N550401 Eng Analysis/Modeling
Water Quality & Supply	N5504	Water System Analysis	N550402 Water Rights Mgmt
Water Quality & Supply	N5504	Water System Analysis	N550403 DEMAND METERING
Water Quality & Supply	N5505	Surface Water Trtmnt Rule	N550501 Monitoring, Reporting & Admin
Water Quality & Supply	N5505	Surface Water Trtmnt Rule	N550502 Cholrination Facilities O&M
Water Quality & Supply	N5505	Surface Water Trtmnt Rule	N550503 Watershed Management
Water Quality & Supply	N5506	Total Coliform Rule Compl.	N550601 Monitoring, Reporting & Admin
Water Quality & Supply	N5508	Lead & Copper Rule Compl.	N550801 Monitoring, Reporting & Admin
Water Quality & Supply	N5508	Lead & Copper Rule Compl.	N550802 Corrosion Trtmnt Facil O&M
Water Quality & Supply	N5509	Fluoridation Program	N550901 Fluoridation Program O&M
Water Quality & Supply	N5510	Other Reg Comp/Monitoring	N551001 Otr Reg/Operational Analysis
Water Quality & Supply	N5510	Other Reg Comp/Monitoring	N551002 Disinfection By-Product Rule
Water Quality & Supply	N5510	Other Reg Comp/Monitoring	N551003 Limnology
Water Quality & Supply	N5510	Other Reg Comp/Monitoring	N551005 WQ Lab
Water Quality & Supply	N5510	Other Reg Comp/Monitoring	N551006 DW Reg Dev & App Research
Water Quality & Supply	N5510	Other Reg Comp/Monitoring	N551007 Public Information/Notification
Water Quality & Supply	N5511	Special Projects	N551104 LIMS & QA/QC

Water Quality & Supply	N5512	Cedar HCP	N551201 INTERIM CHINOOK COHO
Water Quality & Supply	N5513	Cedar HCP	N551301 HCP STREAMFLOW GAUGING
Water Quality & Supply	N5513	Cedar HCP	N551302 SWITCHING CRITERIA STUDY
Water Quality & Supply	N5513	Cedar HCP	N551303 STEELHEAD REDD MONITORING
Water Quality & Supply	N5513	Cedar HCP	N551304 CHINOOK STUDIES
Water Quality & Supply	N5513	Cedar HCP	Salmonid Studies
Water Quality & Supply	N5514	WQ Monitoring	N551403 DRINKING WATER QUALITY MONITOR
Water Quality & Supply	N5515	HCP Fisheries	N551501 FRY CONDITION AT RELEASE
Water Quality & Supply	N5515	HCP Fisheries	N551502 FRY MARKING & EVALUATION
Water Quality & Supply	N5515	HCP Fisheries	N551503 FRY TRAPPING & COUNTING
Water Quality & Supply	N5515	HCP Fisheries	N551504 FISH HEALTH
Water Quality & Supply	N5515	HCP Fisheries	N551505 SHORT-TERM FRY REARING
Water Quality & Supply	N5515	HCP Fisheries	N551506 LAKE WASHINGTON PLANKTON STUDY
Water Quality & Supply	N5515	HCP Fisheries	N551508 ADULT SURVIVAL DISTRIBUTION
Water Quality & Supply	N5515	HCP Fisheries	N551509 PHENOTYPIC & GENETIC STUDY
Water Quality & Supply	N5516	Tolt DBO	N551601-CONTRACTOR PAYMENTS
Water Quality & Supply	N5516	Tolt DBO	N551603-MANAGEMENT COSTS
Resource Planning	N5609	Water Resource & Habitat Issues	N560903-ESA

Transmission

Program	Project	Project Name	Activity
Water Operation	N6540	WT - Headwork/Storage	N654001 Program Maintenance
Water Operation	N6540	WT - Headwork/Storage	N654002 Event Driven Repairs
Water Operation	N6541	WT - Transmission Pipeline Maint	N654101 Program Maintenance
Water Operation	N6541	WT - Transmission Pipeline Maint	N654102 Event Driven Repairs
Water Operation	N6542	WT - Value Op/Maint - Water Tran	N654201 Program Maintenance
Water Operation	N6542	WT - Value Op/Maint - Water Tran	N654202 Event Driven Repairs
Water Operation	N6543	WT - Grounds/Roads/ROW	N654301 Grade/gravel roads - P
Water Operation	N6543	WT - Grounds/Roads/ROW	N654302 Grade/gravel roads - E
Water Operation	N6543	WT - Grounds/Roads/ROW	N654303 Bridges/culverts - P
Water Operation	N6543	WT - Grounds/Roads/ROW	N654304 Bridges/culverts - E
Water Operation	N6543	WT - Grounds/Roads/ROW	N654305 Fences/gates - P
Water Operation	N6543	WT - Grounds/Roads/ROW	N654306 Fences/gates - E
Water Operation	N6543	WT - Grounds/Roads/ROW	N654307 Mow ROW - P
Water Operation	N6543	WT - Grounds/Roads/ROW	N654308 Mow ROW - E
Water Operation	N6543	WT - Grounds/Roads/ROW	N654309 Mow Other
Water Operation	N6544	WT - Facility Maintenance	N654401 Program Maintenance
Water Operation	N6544	WT - Facility Maintenance	N654402 Event Driven Repairs
Water Operation	N6545	WT - Castings	N654501 Casting Adjustments
Water Operation	N6546	WT - Customer Services	N654601 Communications/Dispatch
Water Operation	N6546	WT - Customer Services	N654602 Locating/Marking
Water Operation	N6547	WT - Damage by Others	N654701 P/L/ROW/Facility
Water Operation	N6548	WT - Transmission Shops	N654801 Shops/Fabrication
Water Operation	N6549	WT - General Expenses	N654905 Tools/small equipment
Water Operation	N6549	WT - General Expenses	N654906 Standy
Water Operation	N6549	WT - General Expenses	N654907 Truck Inventory
Water Operation	N6549	WT - General Expenses	N654908 Downtime - Job Related
Water Operation	N6549	WT - General Expenses	N654909-DISASTER-EMERG RESPONSE

Regional Water Conservation Program

Program	Project	Project Name	Activity
Community Services	N5303	Resource Conservation	N530301 1% Conservation

Cost Centers Used for Operations Cost Indices

amended 12/31/2009

Existing Supply

Program	Project	Project Name	Activity	Description
SPU General Expense	N0108	Emergency Response	NN90036	4/23/09 Tolt Trmt Plant Emrgcy
SPU General Expense	N0503	Water Fund Contracts	N050302	Tolt DBO Contract Payments
SPU General Expense	N0503	Water Fund Contracts	N050303	Cedar DBO Contract Payments
Branch Administration	N3106	Water Wholesale Contracts	N310601	Wholesale Water Contracts Mgmt
Customer Billing Services	N3303	Customer Audit	N330303	Purveyor
Cedar & Tolt Watershed Srvcs	N5401	Program Management	N540198	Safety
Drainage & Wastewater	N6210	Landsburg Mgmt & HCP Support	N621001	Oprtn of Passage Facility-HCP
Drainage & Wastewater	N6210	Landsburg Mgmt & HCP Support	N621002	Interim Hatchery Ops-HCP
Water Operation	N6510	Misc Water Operations	N651004	Alternative Duty
Water Operation	N6540	Headwork/Storage	N654003	(Cedar) Chlorination Facility O&M
Water Operation	N6540	Headwork/Storage	N654004	Fluoridation Program O&M
Water Operation	N6540	Headwork/Storage	N654005	RMP/PSM Compliance
Water Operation	N6573	In-Town Reservoir Treatment	N657304	Highline Well F(Location Code)
Asset Data Systems	N6903	SCADA Development & Support	N690301	SCADA SYSTEM PLANNING
Asset Data Systems	N6903	SCADA Development & Support	N690302	SCADA INFRASTRUCTURE O&M
Asset Data Systems	N6903	SCADA Development & Support	N690303	DAM SAFETY SCADA
Surface Water LOB	N7311	Landsburg Mtgtn & HCP Support	N731101	Fry Condition @ Release - HCP
Surface Water LOB	N7311	Landsburg Mtgtn & HCP Support	N731102	Fry Marking & Evaluation - HCP
Surface Water LOB	N7311	Landsburg Mtgtn & HCP Support	N731103	Fry Tapping & Counting - HCP
Surface Water LOB	N7311	Landsburg Mtgtn & HCP Support	N731104	Fish Health – HCP
Surface Water LOB	N7311	Landsburg Mtgtn & HCP Support	N731105	Adult Survival Distribution - HCP
Surface Water LOB	N7311	Landsburg Mtgtn & HCP Support	N731106	Pheno & Gen Study - HCP
Surface Water LOB	N7311	Landsburg Mtgtn & HCP Support	N731107	Zooplnktn Stds (Sprng) - HCP
Surface Water LOB	N7311	Landsburg Mtgtn & HCP Support	N731108	HCP Support
Surface Water LOB	N7311	Landsburg Mtgtn & HCP Support	N731109	Operation of Passage Facility - HCP
Surface Water LOB	N7311	Landsburg Mtgtn & HCP Support	N731110	Landsburg Fish Ladder - HCP
Surface Water LOB	N7311	Landsburg Mtgtn & HCP Support	N731111	DW Quality Monitoring - HCP
Surface Water LOB	N7311	Landsburg Mtgtn & HCP Support	N731112	Interim Hatchery Ops - HCP
Surface Water LOB	N7311	Landsburg Mtgtn & HCP Support	N731113	Adaptive Mgmt - Sockeye Hatch
Drinking Water LOB	N7503	Water LOB Planning & Perf	N750303	Network Hydraulic Model Dev
Drinking Water LOB	N7504	Water Resource Business	N750403	Hydrology Model Dev & Maintenance
Drinking Water LOB	N7504	Water Resource Business	N750404	Water Resource Operation Mgmt
Drinking Water LOB	N7504	Water Resource Business	N750406	Morse Lake Pump Plant
Drinking Water LOB	N7504	Water Resource Business	N750407	Anadromous Fishery Mgmt
Drinking Water LOB	N7504	Water Resource Business	NN90053	Tolt Spillway Leak Repair
Drinking Water LOB	N7505	HCP Instream Flow Monitor & Res	N750501	Existing Stream Gage At Cedar F
Drinking Water LOB	N7505	HCP Instream Flow Monitor & Res	N750502	Exist. Stream Gage Below Landsburg
Drinking Water LOB	N7505	HCP Instream Flow Monitor & Res	N750503	New Stream Gag Above Powerhouse
Drinking Water LOB	N7505	HCP Instream Flow Monitor & Res	N750504	New Gage At Renton
Drinking Water LOB	N7505	HCP Instream Flow Monitor & Res	N750505	Temporary Gages In Lower River
Drinking Water LOB	N7505	HCP Instream Flow Monitor & Res	N750506	Accretion Flow Study
Drinking Water LOB	N7505	HCP Instream Flow Monitor & Res	N750507	Switching Criteria Study
Drinking Water LOB	N7505	HCP Instream Flow Monitor & Res	N750509	Instream Flow Commission
Drinking Water LOB	N7505	HCP Instream Flow Monitor & Res	N750511	Dead Strg Bull Trout Dlta Mdln
Drinking Water LOB	N7505	HCP Instream Flow Monitor & Res	N750512	Steelhead Redd Monitoring
Drinking Water LOB	N7507	Water Quality & Treatment Business Area	N750705	Tolt Management Costs
Drinking Water LOB	N7507	Water Quality & Treatment Business Area	N750707	Cedar DBO Management Costs
Drinking Water LOB	N7509	Operations Plan & System Control	N750802	Water System Monitor & Control
Drinking Water LOB	N7511	Landsburg Mitigation. & HCP Support	N751101	Fry Condition @ Release - HCP

Drinking Water LOB	N7511	Landsburg Mitigation. & HCP Support	N751102	Fry Marking & Evaluation - HCP
Drinking Water LOB	N7511	Landsburg Mitigation. & HCP Support	N751103	Fry Trapping & Counting - HCP
Drinking Water LOB	N7511	Landsburg Mitigation. & HCP Support	N751104	Fish Health – HCP
Drinking Water LOB	N7511	Landsburg Mitigation. & HCP Support	N751105	Adult Survival Distribution - HCP
Drinking Water LOB	N7511	Landsburg Mitigation. & HCP Support	N751106	Pheno & Gen Study – HCP
Drinking Water LOB	N7511	Landsburg Mitigation. & HCP Support	N751107	Zooplnktn Stds (Sprng) - HCP
Drinking Water LOB	N7511	Landsburg Mitigation. & HCP Support	N751108	HCP Support
Drinking Water LOB	N7511	Landsburg Mitigation. & HCP Support	N751109	Operation of Passage Facility - HCP
Drinking Water LOB	N7511	Landsburg Mitigation. & HCP Support	N751110	Landsburg Fish Ladder - HCP
Drinking Water LOB	N7511	Landsburg Mitigation. & HCP Support	N751112	Interim Hatchery Ops - HCP
Tech systems	N7705	SCADA Development & Support	N770501	SCADA System Planning
Tech systems	N7705	SCADA Development & Support	N770502	SCADA Infrastructure O&M
Watershed Management	N7801	Program Management	N780196	General Management
Watershed Management	N7803	Support Services	N780301	Procuring/Paying/Receiving
Watershed Management	N7804	Watershed Protection	N780401	Hydrological Data Collection
Watershed Management	N7804	Watershed Protection	N780402	Fire Protection
Watershed Management	N7804	Watershed Protection	N780403	Inspection
Watershed Management	N7804	Watershed Protection	N780404	Boundaries
Watershed Management	N7804	Watershed Protection	N780405	Facilities Security
Watershed Management	N7805	Facility Management	N780501	WS Grounds
Watershed Management	N7805	Facility Management	N780502	WS Buildings
Watershed Management	N7805	Facility Management	N780503	WS Edu Facilities Mgmt
Watershed Management	N7806	Watershed Road Maintenance	N780601	Grade/Gravel/Drain
Watershed Management	N7806	Watershed Road Maintenance	N780602	Bridges/Streams Culvert
Watershed Management	N7806	Watershed Road Maintenance	N780603	Roads/ROW/Vegetation Cutting
Watershed Management	N7806	Watershed Road Maintenance	N780604	Tolt Roads & Streams
Watershed Management	N7807	Watershed Operations Support	N780701	Vehicle/Equipment Management
Watershed Management	N7807	Watershed Operations Support	N780702	Vehicle/Equip/Tool Repair
Watershed Management	N7808	Water Quality & Hydrology	N780801	Hydrological Monitoring
Watershed Management	N7809	Public/Cultural Programs	N780901	Recreation Planning
Watershed Management	N7809	Public/Cultural Programs	N780902	CR Management & Research
Watershed Management	N7809	Public/Cultural Programs	N780903	Watershed Education
Watershed Management	N7809	Public/Cultural Programs	N780904	Watershed Public Information
Watershed Management	N7809	Public/Cultural Programs	N780905	Educational Center Operations
Watershed Management	N7809	Public/Cultural Programs	N780906	Cedar River Watershed Institute
Watershed Management	N7809	Public/Cultural Programs	N780907	Tolt WS MP Impl Cultural Rest
Watershed Management	N7810	Wildlife & Fisheries Programs	N781001	Program Planning & Evaluation
Watershed Management	N7810	Wildlife & Fisheries Programs	N781002	Interagency/Public Involvement
Watershed Management	N7810	Wildlife & Fisheries Programs	N781003	Ecological Monitoring & Research
Watershed Management	N7810	Wildlife & Fisheries Programs	N781004	Habitat & Species Inventory
Watershed Management	N7810	Wildlife & Fisheries Programs	N781005	Habitat Enhancement/Restoration
Watershed Management	N7811	Resource Information Mgmt	N781101	Information Services
Watershed Management	N7812	Special Projects	N781201	Silviculture
Watershed Management	N7813	CRHCP WS Terestrl Mnitr/Resrch	N781301	Assess Of Expand Forest Stand
Watershed Management	N7813	CRHCP WS Terestrl Mnitr/Resrch	N781302	Assess Expand Forest Attribute
Watershed Management	N7813	CRHCP WS Terestrl Mnitr/Resrch	N781303	Long-Term Forest Habitat Inventory
Watershed Management	N7813	CRHCP WS Terestrl Mnitr/Resrch	N781304	Old-Growth Classification
Watershed Management	N7813	CRHCP WS Terestrl Mnitr/Resrch	N781305	Riparian Restoration Project Monitoring
Watershed Management	N7813	CRHCP WS Terestrl Mnitr/Resrch	N781306	Upland Forest Restoration Project Mont
Watershed Management	N7813	CRHCP WS Terestrl Mnitr/Resrch	N781308	Experimental Murrelet Habitat
Watershed Management	N7813	CRHCP WS Terestrl Mnitr/Resrch	N781309	Spotted Owl Baseline Survey
Watershed Management	N7813	CRHCP WS Terestrl Mnitr/Resrch	N781311	OPTION SPECIES/HABITAT SURVEYS
Watershed Management	N7813	CRHCP WS Terestrl Mnitr/Resrch	N781312	GIS Data Compatibility Study
Watershed Management	N7813	CRHCP WS Terestrl Mnitr/Resrch	N781313	Species Habitat Relation Modeling
Watershed Management	N7814	CRHCP Program Support	N781401	CRHCP Technical Support
Watershed Management	N7814	CRHCP Program Support	N781402	BPA Mitigation Program - Watershed
Watershed Management	N7815	CRHCP Watershed Road Managment	N781501	Road Maintenance
Watershed Management	N7816	CRHCP WS Aquatic Monitr/Resrch	N781601	Long-Term Stream Monitoring

Watershed Management	N7816	CRHCP WS Aquatic Monitr/Resrch	N781602	Aquatic Restoration Monitoring
Watershed Management	N7816	CRHCP WS Aquatic Monitr/Resrch	N781604	Bull Trout Spawning Survey
Watershed Management	N7816	CRHCP WS Aquatic Monitr/Resrch	N781605	Bull Trout Fry/Juvenile Survey
Watershed Management	N7816	CRHCP WS Aquatic Monitr/Resrch	N781606	Bull Trout Stream Distribution
Watershed Management	N7816	CRHCP WS Aquatic Monitr/Resrch	N781607	Common Loon Monitoring
Watershed Management	N7817	Watershed Svc MIT Implement	N781701	Watershed Tribal Relations Coordination
Watershed Management	N7818	Tolt WS MP Impl Habitat Rest	N781801	Tolt WS MP Impl Habitat Rest
Laboratory Services	N7903	WQ Regulatory Compliance	N790301	SWTR Monitoring, Reporting & Adm
Laboratory Services	N7903	WQ Regulatory Compliance	N790302	TCR Monitoring, Reporting & Adm
Laboratory Services	N7903	WQ Regulatory Compliance	N790303	LCR Monitoring, Reporting & Adm
Laboratory Services	N7903	WQ Regulatory Compliance	N790304	DBP Monitoring, Reporting & Adm
Laboratory Services	N7903	WQ Regulatory Compliance	N790305	Public Information/Notification
Laboratory Services	N7903	WQ Regulatory Compliance	N790306	Regulatory Support
Laboratory Services	N7904	WQ Monitoring	N790402	Operations Support
Laboratory Services	N7904	WQ Monitoring	N790403	Limnology
Laboratory Services	N7905	Customer Support	N790502	Applied Research
Laboratory Services	N7906	Lab Systems	N790601	WQ Lab Facility O&M
Laboratory Services	N7906	Lab Systems	N790602	Lab System Administration & Support
Laboratory Services	N7906	Lab Systems	N790603	QA Admin
Pre-Capital	N5001	E - Water Fund	E100078	Cedar Falls Railroad Hazard
Pre-Capital	N5001	E - Water Fund	E101008	Rock Creek Fishway
Pre-Capital	N5001	E - Water Fund	E105018	BPA - Rd Improve
Pre-Capital	N5001	E - Water Fund	E105019	BPA Roads Other Decommission
Pre-Capital	N5001	E - Water Fund	E105035	BPA Forest ROW Plant Removal
Pre-Capital	N5001	E - Water Fund	E105036	BPA Forest ROW Wood Rplment
Pre-Capital	N5001	E - Water Fund	E105038	BPA Old Forest Restore
Pre-Capital	N5001	E - Water Fund	E107004	Watershed Emergency/Opportunity
Pre-Capital	N5001	E - Water Fund	E107015	Watershed Vegetation Management
Pre-Capital	N5001	E - Water Fund	E107016	Muckleshoot Agreement Implementation Plan
Pre-Capital	N5001	E - Water Fund	E107019	Restoration Thinning Slash Tree
Pre-Capital	N5001	E - Water Fund	E109001	BPA Cedar Invasive Vegetation Mgmt
Pre-Capital	N5001	E - Water Fund	E109002	BPA Restoration Slash Treatment
Pre-Capital	N5001	E - Water Fund	E109003	BPA Information Mgmt Systems

Existing Transmission

SECTION XI. OGRAM	PR	Project	Project Name	Activity	
Water Operation		N6540	WT - Headwork/Storage	N654001	Program Maintenance
Water Operation		N6540	WT - Headwork/Storage	N654002	Event Driven Repairs
Water Operation		N6541	WT - Transmission Pipeline Mai	N654101	Program Maintenance
Water Operation		N6541	WT - Transmission Pipeline Mai	N654102	Event Driven Repairs
Water Operation		N6541	WT - Transmission Pipeline Mai	NN90043	CRPL4 at Airport Expressway
Water Operation		N6542	WT - Valve Op/Maint-Water Tran	N654201	Program Maintenance
Water Operation		N6542	WT - Valve Op/Maint-Water Tran	N654202	Event Driven Repairs
Water Operation		N6543	WT - Grounds/Roads/Row	N654301	Grade/Gravel Roads - P
Water Operation		N6543	WT - Grounds/Roads/Row	N654302	Grade/Gravel Roads - E
Water Operation		N6543	WT - Grounds/Roads/Row	N654303	Bridges/Culverts – P
Water Operation		N6543	WT - Grounds/Roads/Row	N654304	Bridges/Culverts – E
Water Operation		N6543	WT - Grounds/Roads/Row	N654305	Fences/Gates – P
Water Operation		N6543	WT - Grounds/Roads/Row	N654306	Fences/Gates – E
Water Operation		N6543	WT - Grounds/Roads/Row	N654307	Mow Row – P
Water Operation		N6543	WT - Grounds/Roads/Row	N654308	Mow Row – E
Water Operation		N6543	WT - Grounds/Roads/Row	N654309	Mow Other
Water Operation		N6543	WT - Grounds/Roads/Row	NN90042	Derby Creek and Tolt ROW
Water Operation		N6544	WT - Facility Maintenance	N654401	Program Maintenance
Water Operation		N6544	WT - Facility Maintenance	N654402	Event Driven Repairs
Water Operation		N6545	WT - Castings	N654501	Casting Adjustments
Water Operation		N6546	WT - Customer Services	N654601	Communications/Dispatch

Water Operation	N6546	WT - Customer Services	N654602	Locating/Marking
Water Operation	N6547	WT - Damage By Others	N654701	P/L/Row/Facility
Water Operation	N6548	WT - Transmission Shops	N654801	Shops/Fabrication
Water Operation	N6549	WT - General Expenses	N654905	Tools/Small Equipment
Water Operation	N6549	WT - General Expenses	N654906	Standby
Water Operation	N6549	WT - General Expenses	N654907	Truck Inventory
Water Operation	N6549	WT - General Expenses	N654908	Downtime - Job Related
Water Operation	N6549	WT - General Expenses	N654909	Disaster-Emergency Response

New Supply

Program	Project	Project Name	Activity	
Customer Service	N3904	Resource Conservation	N390401	Water Conservation
Customer Service	N3904	Resource Conservation	N390412	Water Conservation-Landscape

New Transmission

Program	Project	Project Name	Activity	
Branch Administration	N3106	Water Wholesale Contracts	N310602	Operating Board Website

DUVALL ULTIMATE SERVICE AREA

Duvall

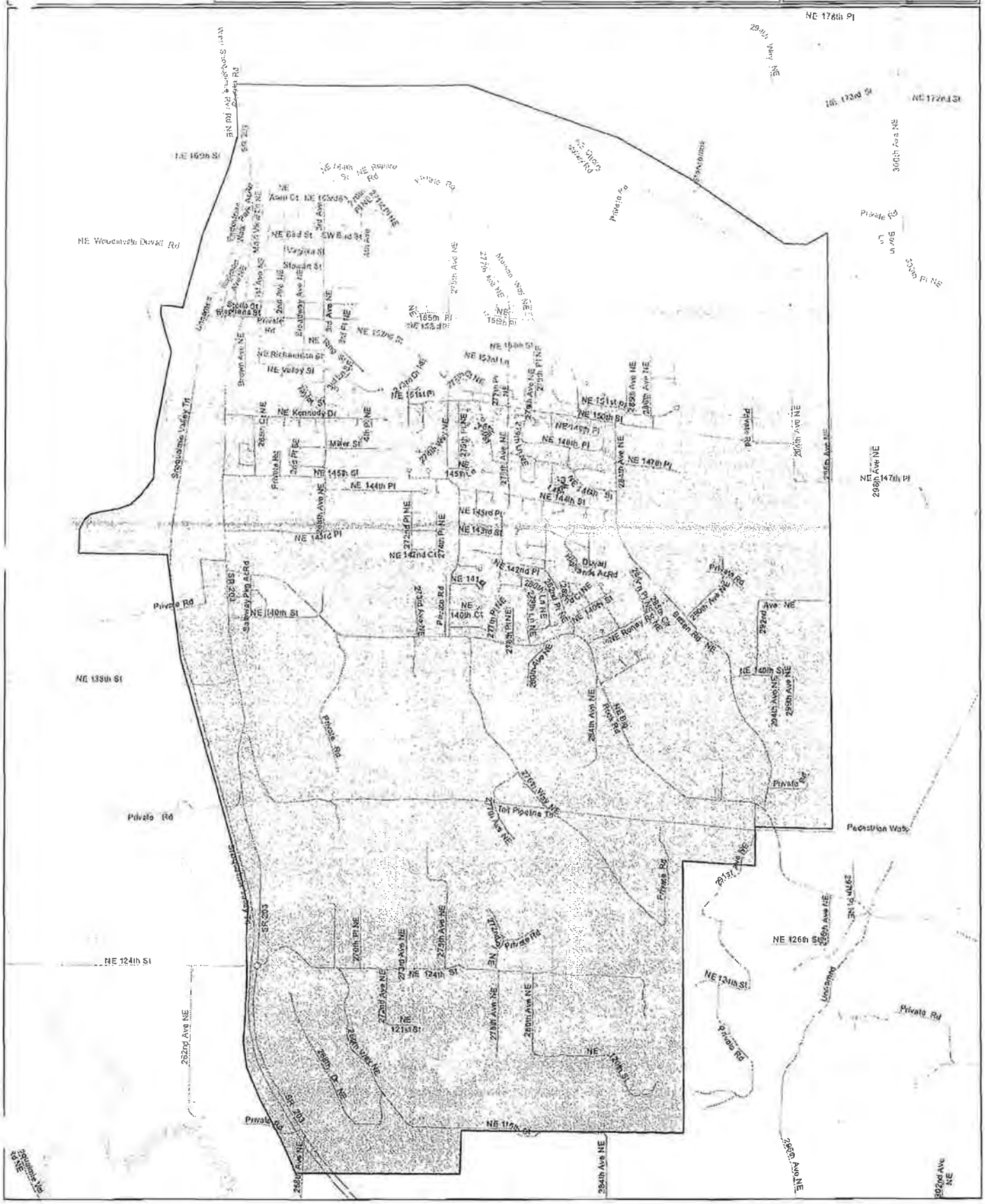

OPERATING BOARD ANIZATIONAL CHART

By Category

	FUTURE?			CURRENT		INTERIM 2011	Representative
1	Northshore	2,394,673		Northshore		Northshore	Matt Everett - OB Member
2	Highline	2,143,580		Highline		Highline	Ron Speer - Alternate
3	Soos Creek	1,873,183	LARGE	Soos Creek	LARGE	Soos Creek	
4	Woodinville	1,781,785		Woodinville		Woodinville	
5	WD 20	1,237,780				WD 20	Walt Canter - OB Member
6	Mercer Island	855,678				Mercer Island	Terry Smith - Alternate
1	Cedar River	800,755		WD 20		Cedar River	
2	Shoreline	771,973	MEDIUM	Mercer Island	MEDIUM	Shoreline	
3	Bothell	640,359		Cedar River		Bothell	
4	WD 49	556,683		Shoreline		WD49	
5	WD 125	515,485				WD 125	Steve Moye - OB Vice Chair
6	Coal Creek	485,859				Coal Creek	John Thompson - Alternate
1	WD 90	433,468		WD 125		Olympic View	
2	Olympic View	361,712	SMALL	Coal Creek	SMALL	WD 45	
3	Duvall	224,298		Olympic View		WD 90	
4	WD 119	115,579		WD 45		WD 119	
5	WD 45	100,229				Duvall	
6	Renton	59,904				Renton	
		2010 10 ccf Consumption					

May 3, 2011

EXHIBIT X

Water Utility Service Area

SEE NEXT PAGE

APPENDIX C

Water Facilities Inventory (WFI) Form

Washington State Department of Health
Division of Environmental Health
Office of Drinking Water

WATER FACILITIES INVENTORY (WFI) FORM

ONE FORM PER SYSTEM

RECEIVED
JAN 24 2011
CITY OF DUVALL

Quarter: 1
Updated: 12/21/2010
Printed: 01/13/2011
WFI Printed For: On-Demand
Submission Reason: Annual Update

RETURN TO: Northwest Regional Office, 20435 72nd Ave S STE 200, Kent, WA 98032

1. SYSTEM ID NO.	2. SYSTEM NAME	3. COUNTY	4. GROUP	5. TYPE
50 8	DUVALL, CITY OF	KING	A	Comm

6. PRIMARY CONTACT NAME & MAILING ADDRESS

STEVE LENISZEWSKI [PW DIRECTOR]
PO BOX 1300
DUVALL, WA 98019

7. OWNER NAME & MAILING ADDRESS — **8. Owner Number** 001625

DUVALL, CITY OF
STEVE LENISZEWSKI
PO BOX 1300
DUVALL, WA 98019

TITLE: OWNER ORG - PRIMAR

STREET ADDRESS IF DIFFERENT FROM ABOVE

ATTN
ADDRESS 15535 MAIN ST NE
CITY DUVALL STATE WA ZIP 87019

STREET ADDRESS IF DIFFERENT FROM ABOVE

ATTN
ADDRESS 15535 MAIN ST NE
CITY DUVALL STATE WA ZIP 98019

9. 24 HOUR PRIMARY CONTACT INFORMATION

Primary Contact Daytime Phone:	(425) 788-3434
Primary Contact Mobile/Cell Phone:	(206) 255-1601
Primary Contact Evening Phone:	(425) 788-3434
Fax: (425) 788-0311	E-mail: steven.leniszewski@duvallwa.gov

10. OWNER CONTACT INFORMATION

Owner Daytime Phone:	(425) 788-3434
Owner Mobile/Cell Phone:	
Owner Evening Phone:	
Fax:	E-mail:

WAC 246-290-420(9) requires that water systems provide 24-hour contact information for emergencies.

11. SATELLITE MANAGEMENT AGENCY - SMA (Check only one)

- [x] Not applicable (Skip to #12)
- [ ] Owned and Managed
- [ ] Managed Only
- [ ] Owned Only

SMA NAME: _____ SMA Number: _____

12. WATER SYSTEM CHARACTERISTICS (mark ALL that apply)

- [x] Agricultural
- [x] Commercial / Business
- [x] Day Care
- [x] Food Service/Food Permit
- [ ] 1,000 or more person event for 2 or more days per year
- [x] Hospital/Clinic
- [x] Industrial
- [x] Licensed Residential Facility
- [ ] Lodging
- [ ] Recreational / RV Park
- [x] Residential
- [x] School
- [ ] Temporary Farm Worker
- [x] Other (church, fire station, etc.): _____

13. WATER SYSTEM OWNERSHIP (mark only one)

- [ ] Association
- [ ] County
- [ ] Investor
- [ ] Special District
- [x] City / Town
- [ ] Federal
- [ ] Private
- [ ] State

14. STORAGE CAPACITY (gallons): 2,700,000

15. Source Number	16. SOURCE NAME (LIST UTILITY'S NAME FOR SOURCE AND WELL TAG ID NUMBER. Example: WELL #1 XYZ 5. IF SOURCE IS PURCHASED OR INTERTIED LIST SELLER'S NAME. Example: SEATTLE)	17. INTERTIE (INTERTIE SYSTEM ID NUMBER)	18. SOURCE CATEGORY: WELL	WELL FIELD	WELL IN A WELL FIELD	SPRING	SPRING FIELD	SPRING IN SPRING FIELD	SEAWATER	SURFACE WATER	RAINEY WELL GALLERY	OTHER	19. USE: PERMANENT	SEASONAL	EMERGENCY	20. SOURCE METERED	21. TREATMENT: NONE	CHLORINATION	FILTRATION	FLUORIDATION	IRRADIATION (UV)	OTHER	22. DEPTH (FIRST OPEN INTERVAL IN FEET)	23. CAPACITY (GALLONS PER MINUTE)	24. SOURCE LOCATION: TAX LOT	SECTION NUMBER	TOWNSHIP	RANGE
S	0Y/SEATTLE	77050 Y											X				X							0			00N	00E

WATER FACILITIES INVENTORY (WFI) FORM - Continued

1. SYSTEM ID NO.	2. SYSTEM NAME	3. COUNTY	4. GROUP	5. TYPE
20750 8	DUVALL, CITY OF	KING	A	Comm

	ACTIVE SERVICE CONNECTIONS	DOH USE ONLY CALCULATED ACTIVE CONNECTIONS	DOH USE ONLY APPROVED CONNECTIONS
25. SINGLE FAMILY RESIDENCES (How many of the following do you have?)	0	2574	Unspecified
A. Full Time Single Family Residences (Occupied 180 days or *more* per year)	2212		
B. Part Time Single Family Residences (Occupied *less than* 180 days per year)	0		
26. MULTI-FAMILY RESIDENTIAL BUILDINGS (How many of the following do you have?)			
A. Apartment Buildings, condos, duplexes, barracks, dorms	40		
B. Full Time Residential Units in the Apartments, Condos, Duplexes, Dorms that are occupied *more than* 180 days/year	362		
C. Part Time Residential Units in the Apartments, Condos, Duplexes, Dorms that are occupied *less than* 180 days/year	0		
27. NON-RESIDENTIAL CONNECTIONS (How many of the following do you have?)			
A. Recreational Services and/or Transient Accommodations (Campsites, RV sites, hotel/motel/overnight units)	74	74	
B. Institutional, Commercial/Business, School, Day Care, Industrial Services, etc.	113	113	
28. TOTAL SERVICE CONNECTIONS		2761	

29. FULL-TIME RESIDENTIAL POPULATION

A. How many residents are served by this system 180 or *more* days per year? 5990

30. PART-TIME RESIDENTIAL POPULATION	JAN	FEB	MAR	APR	MAY	JUN	JUL	AUG	SEP	OCT	NOV	DEC
A. How many part-time residents are present each month?												
B. How many days per month are they present?												

31. TEMPORARY & TRANSIENT USERS	JAN	FEB	MAR	APR	MAY	JUN	JUL	AUG	SEP	OCT	NOV	DEC
A. How many total visitors, attendees, travelers, campers, patients or customers have access to the water system each month?												
B. How many days per month is water accessible to the public?												

32. REGULAR NON-RESIDENTIAL USERS	JAN	FEB	MAR	APR	MAY	JUN	JUL	AUG	SEP	OCT	NOV	DEC
A. If you have schools, daycares, or businesses connected to your water system, how many students daycare children and/or employees are present each month?	1475	1475	1475	1475	1475	1475			1475	1475	1475	1475
B. How many days per month are they present?	20	20	20	20	20	20			20	20	20	20

33. ROUTINE COLIFORM SCHEDULE Requirement is exception from WAC 246-290	JAN	FEB	MAR	APR	MAY	JUN	JUL	AUG	SEP	OCT	NOV	DEC
	8	6	6	6	6	6	5	5	6	6	6	6

35. Reason for Submitting WFI:

☐ Update - Change ☐ Update - No Change ☐ Inactivate ☐ Re-Activate ☐ Name Change ☐ New System ☐ Other _____

36. I certify that the information stated on this WFI form is correct to the best of my knowledge.

SIGNATURE: _____ **DATE:** _____

PRINT NAME: _____ **TITLE:** _____

Washington State Department of Health
Division of Environmental Health
Office of Drinking Water

WATER FACILITIES INVENTORY (WFI) FORM

OCT 18 2010

ONE FORM PER SYSTEM

Quarter: 1
Updated: 12/18/2009
Printed: 10/08/2010
WFI Printed For: Annual
Submission Reason: Annual Update

RETURN TO: Northwest Regional Office, 20435 72nd Ave S STE 200, Kent, WA, 98032

1. SYSTEM ID NO.	2. SYSTEM NAME	3. COUNTY	4. GROUP	5. TYPE
50 3	DUVALL, CITY OF	KING	A	Comm

6. PRIMARY CONTACT NAME & MAILING ADDRESS

STEVE LENISZEWSKI [PW DIRECTOR]
PO BOX 1300
DUVALL, WA 98019

7. OWNER NAME & MAILING ADDRESS — 8. Owner Number: 001620

DUVALL, CITY OF
STEVE LENISZEWSKI
PO BOX 1300
DUVALL, WA 98019

TITLE: OWNER ORG - PRIMAR

STREET ADDRESS IF DIFFERENT FROM ABOVE

ATTN
ADDRESS 15535 Main St NE
CITY Duvall STATE WA ZIP 98019

STREET ADDRESS IF DIFFERENT FROM ABOVE

ATTN
ADDRESS 15535 MAIN ST NE
CITY DUVALL STATE WA ZIP 98019

9. 24 HOUR PRIMARY CONTACT INFORMATION

Primary Contact Daytime Phone:	(425) 788-3434
Primary Contact Mobile/Cell Phone:	(206) 255-1601
Primary Contact Evening Phone:	(425) 788-3434
Fax: (425) 788-0311	E-mail: steven.leniszewski@duvallwa.gov

10. OWNER CONTACT INFORMATION

Owner Daytime Phone:	(425) 788-3434
Owner Mobile/Cell Phone:	
Owner Evening Phone:	
Fax:	E-mail:

WAC 246-290-420(9) requires that water systems provide 24-hour contact information for emergencies.

11. SATELLITE MANAGEMENT AGENCY - SMA (check only one)

- [x] Not applicable (Skip to #12)
- [ ] Owned and Managed
- [ ] Managed Only
- [ ] Owned Only

SMA NAME: _____ SMA Number:

12. WATER SYSTEM CHARACTERISTICS (mark ALL that apply)

- [x] Agricultural
- [x] Commercial / Business
- [x] Day Care
- [x] Food Service/Food Permit
- [ ] 1,000 or more person event for 2 or more days per year
- [x] Hospital/Clinic
- [x] Industrial
- [x] Licensed Residential Facility
- [ ] Lodging
- [ ] Recreational / RV Park
- [x] Residential
- [x] School
- [ ] Temporary Farm Worker
- [x] Other (church, fire station, etc.):

13. WATER SYSTEM OWNERSHIP (mark only one)

- [ ] Association
- [ ] County
- [ ] Investor
- [ ] Special District
- [x] City / Town
- [ ] Federal
- [ ] Private
- [ ] State

14. STORAGE CAPACITY (gallons): 2,700,000

15. Source Number	16. Source Name (List Utility's Name for Source and Well Tag Number. Example: WELL 1 (X-Y-Z) 5c. If Source is Purchased or Intertied, List Seller's Name. Example: SEATTLE)	17. Intertie (Intertie System ID Number)	18. Source Category: Well	Well Field	Well in a Well Field	Spring	Spring Field	Springs in a Spring Field	Surface Water	Rainwater Cistern	Other	19. Use: Permanent	Seasonal	Emergency	20. Source Metered	21. Treatment: None	Chlorination	Filtration	Fluoridation	Iodination	Other	22. Depth (Depth of first open interval if well)	23. Capacity (gallons per minute)	24. Source Location: Quarter Section	Section Number	Township	Range
1	50Y/SEATTLE	77050 Y										X				X							0			00N	00E

WATER FACILITIES INVENTORY (WFI) FORM - Continued

1. SYSTEM ID NO.	2. SYSTEM NAME	3. COUNTY	4. GROUP	5. TYPE
20750 8	DUVALL, CITY OF	KING	A	COMM

	ACTIVE SERVICE CONNECTIONS	DO NOT USE ONE CONNECTION	DO NOT USE ONE CONNECTION
25. SINGLE FAMILY RESIDENCES (How many of the following do you have?)	0	2476	Unspecified
A. Full Time Single Family Residences (Occupied 180 days or *more* per year)	~~2117~~	2212	
B. Part Time Single Family Residences (Occupied *less than* 180 days per year)	0		
26. MULTI-FAMILY RESIDENTIAL BUILDINGS (How many of the following do you have?)			
A. Apartment Buildings, condos, duplexes, barracks, dorms	~~41~~	40	
B. Full Time Residential Units in the Apartments, Condos, Duplexes, Dorms that are occupied *more than* 180 days/year	362		
C. Part Time Residential Units in the Apartments, Condos, Duplexes, Dorms that are occupied *less than* 180 days/year	0		
27. NON-RESIDENTIAL CONNECTIONS (How many of the following do you have?)			
A. Recreational Services and/or Transient Accommodations (Campsites, RV sites, hotel/motel/overnight units)	74	74	
B. Institutional, Commercial/Business, School, Day Care, Industrial Services, etc.	~~99~~ 113	99	
28. TOTAL SERVICE CONNECTIONS		2652	

29. FULL-TIME RESIDENTIAL POPULATION

A. How many residents are served by this system 180 or *more* days per year? ~~5980~~ 5990

30. PART-TIME RESIDENTIAL POPULATION	JAN	FEB	MAR	APR	MAY	JUN	JUL	AUG	SEP	OCT	NOV	DEC
A. How many part-time residents are present each month?												
B. How many days per month are they present?												

31. TEMPORARY & TRANSIENT USERS	JAN	FEB	MAR	APR	MAY	JUN	JUL	AUG	SEP	OCT	NOV	DEC
A. How many total visitors, attendees, travelers, campers, patients or customers have access to the water system each month?												
B. How many days per month is water accessible to the public?												

32. REGULAR NON-RESIDENTIAL USERS	JAN	FEB	MAR	APR	MAY	JUN	JUL	AUG	SEP	OCT	NOV	DEC
A. If you have schools, daycares, or businesses connected to your water system, how many students daycare children and/or employees are present each month?	1475	1475	1475	1475	1475	1475			1475	1475	1475	1475
B. How many days per month are they present?	20	20	20	20	20	20			20	20	20	20

33. ROUTINE COLIFORM SCHEDULE (Requirement is exception from WAC 246-290)	JAN	FEB	MAR	APR	MAY	JUN	JUL	AUG	SEP	OCT	NOV	DEC
	6	6	6	6	6	6	5	5	6	6	6	6

35. Reason for Submitting WFI

☑ Update - Change ☐ Update - No Change ☐ Inactivate ☐ Re-Activate ☐ Name Change ☐ New System ☐ Other _____

36. I certify that the information stated on this WFI form is correct to the best of my knowledge.

SIGNATURE: _____ **DATE:** 11/9/10

PRINT NAME: Steven Leniszewski **TITLE:** Director of Public Works

APPENDIX D

Water System Facility Data

City of Duvall
Comprehensive Water System Plan
Supply Station Facilities Data

Supply Facility Data

Name	Suction Pressure Zone	Discharge Pressure Zone	Year Const.	Above or Below Grade	Maximum Capacity (gpm)	Flow Meter Size	Have Standby Power	Have Pressure Relief	Have Surge Protection
Tolt 2 Supply Station (Sta 111)	SPU	450	1963	Below	1,200	12	No	No	No
Tolt 1 Supply Station (Sta 112)	SPU	615	1984	Below	1,760	12	No	No	No

Control Valve Data

Name	Description	Control Valve Size	Control Valve Model	Valve Mfgr	Valve Elv (feet)	Valve Set Point (psi)	Valve Set Point (feet H.E.)
Tolt 2 Supply Station (Sta 111)	Mainline	10	131G-12BCSYKX	Cla-Val	269	75	442
Tolt 2 Supply Station (Sta 111)	Bypass	4	131G-12BCSYKX	Cla-Val	269	80	454
Tolt 1 Supply Station (Sta 112)	Mainline	8	131G-12BCSYKX	Cla-Val	467	65	617
Tolt 1 Supply Station (Sta 112)	Bypass	4	131G-12BCSYKX	Cla-Val	467	70	629

Control Data

Name	Control Component	Supplied Pressure Zone	Supply To Zone Priority	Supply Operation Priority	Station Have Telemetry
Tolt 2 Supply Station (Sta 111)	Flow Rate Controlled	450			Yes
Tolt 1 Supply Station (Sta 112)	Flow Rate Controlled	615			Yes

er Data

Name	Ground Elv (feet)	Control Valve Elv (feet)	SPU Min. Con. Head (feet)[1]	Normal Pressure Inlet (psi)	Normal Pressure Outlet (psi)
Tolt 2 Supply Station (Sta 111)	274	269	630	220	80/75
Tolt 1 Supply Station (Sta 112)	472	467	635	100	70/65

1 Minimum head elevations based on City of Seattle datum rounded to nearest 5 feet. Revised 12/13/96, effective 12/13/00 due to Tolt Filtration Plant improvements. To convert between City of Seattle and NAVD88 Datums, use: ("City of Seattle Datum" + 9.7 ft. = NAVD88)

City of Duvall
Comprehensive Water System Plan
Pump Station Facilities Data

Pump Station Data

Name	Suction Pressure Zone	Discharge Pressure Zone	Year Const.	Above or Below Grade	Maximum Capacity (gpm)	Meter Size & Model	Have Standby Power	Have E.G. Set Receptacle	Have Surge Protection
615 Zone BPS	450	615	1996	Above	2,000	12"	Yes	Yes	6" SAV

Pump Data

Pump Name	Pump Manufacturer	Pump Model	Pump Type	Current Pump Rate (gpm)	Design Capacity (gpm)	Design Head (feet)	Motor Mfgr	Motor Size (HP)	Control Valve Size & Model
Booster Pump #1	Floway	8 JOH	VT 6 stage		350	154	GE	30	Check only
Booster Pump #2	Peerless	2624332/MC	VT 4 stage		1000	165	GE	60	Check only
Booster Pump #3	Goulds	DWI 12RJLC	VT 3 stage		1000	158	US Electric	60	Check only
Notes:	All pumps have VFD's								

Pump Curve Data

Pump Name	Point 1		Point 2		Point 3		Pump Serial Number	Pump Impeller Diameter
	Flow (gpm)	Head (feet)	Flow (gpm)	Head (feet)	Flow (gpm)	Head (feet)		
Booster Pump #1							21245-1-1	
Booster Pump #2								
Booster Pump #3							FR426919	

Pump Control Data

Pump Name	Control Facility	Supplied Pressure Zone	Supply To Zone Priority	Pump Operation Priority	Station Have Telemetry
Booster Pump #1	615 Zone pressure	615	Secondary, Tolt 1st	Primary	Yes
Booster Pump #2	615 Zone pressure	615	Secondary, Tolt 1st	1st Lag	Yes
Booster Pump #3	615 Zone pressure	615	Secondary, Tolt 1st	2nd Lag	Yes

City of Duvall
Comprehensive Water System Plan
Storage Facilities Data

Reservoir Data

Reservoir Name	Pressure Zone	Year Const.	Material	Capacity (gallons)	Overall Height (feet)	Diameter (feet)	Water Base Elv (feet)	Overflow Elv (feet)	Ground Elv (feet)	Seismic Restraint (Y or N)
Crestview Estates	555	1988	Steel	500,000	63.2	38	496.0	556.0	496	Y
Big Rock Road	450	1996	Steel	2,200,000	27.3	138	430.0	450.5	430	N

Piping Data

Reservoir Name	Outlet Size (in)	Inlet Size (in)	Elevated Inlet Elv. (feet)	Altitude Valve		Overflow Size (in)	Drain Size (in)	Meter Size (in)	Notes
				Size (in)	Setting (feet)				
Crestview Estates	12	8 to 6	545	4		6	12/6	n/a	1
Big Rock Road	12	inlet/outlet combo	n/a	6		8	12	n/a	2

1. Altitude control valve with backpressure sustaining and 8" insertion flow meter on inlet piping
2. Altitude control valve (Cla-Val 210-03-ADS) with solenoid control from 615 Zone

Storage Data

Reservoir Name	Max Water Height (feet)	Volume Per Foot (gallons)
Crestview Estates	60.0	8,484
Big Rock Road	20.5	111,887

Level Control Data

Reservoir Name	Controlled Supply Facility	Reservoir Have Telemetry	Normal Operating Range (feet)
Crestview Estates	615 Zone Pump Station	Yes	544 - 555
Big Rock Road	Tolt 2 Supply Station	Yes	440 - 450

City of Duvall

Comprehensive Water System Plan

Pressure Reducing Station Data

Station Data

PRV Name	Upper Pressure Zone	Lower Pressure Zone	Year Const.	Ground Elv. (feet)	Normal Pressure Inlet (PSI)	Normal Pressure Outlet (PSI)	Station Status
Kennedy Drive	450	330		213	99	54	Active
26500 NE 145th	450	330		168	118	73	Active
Park Street	450	330		200	104	60	Active
3rd & Virginia	450	330		222	95	50	Active
3rd & Stewart	450	330		220	96	51	Removed
3rd & Cherry	450	330		220	96	51	Removed
3rd & Stella	450	330		220	96	51	Removed
143rd & 268th	450	330		235	89	44	Active
NE Big Rock Road	450	330		173	116	71	Active
Stephens St & Broadway	450	330		188	110	65	Active
272nd & 143rd	555	450		300	106	63	Active
Sunset Heights 144th	555	450		292	109	67	Active
Millers Homestead	555	450		317	98	56	Active
Bruett Road	555	450		320	97	55	Active
Kasper Heights	555	485		360	80	56	Active
275th & 141st	555	485		336	90	66	Active
150th & 278th	615	555		436	77	49	Active
Manion & 156th	615	555		434	78	50	Active
282nd &140th	615	555		406	90	62	Active

PRV Set Point Data

PRV Name	Description	Valve Size (inches)	Valve Mfgr	Valve Model	Valve Elv (feet)	Valve Set Point (PSI)	Valve Set Point (feet H.E.)
Kennedy Drive	Small PRV	2	Cla-Val	90G-01AS	208	50	324
	Large PRV	6	Cla-Val	90G-01AB	208	45	312
26500 NE 145th	Small PRV	2	Cla-Val	90G-01AS	163	66	315
	Large PRV	6	Cla-Val	90G-01AB	163	61	304
Park Street	Small PRV	3	Cla-Val	G-01SW/X4	195	48	306
	Large PRV	--	--	--	--	--	--
3rd & Virginia	Small PRV	3	Cla-Val	90G-01AS	217	50	333
	Large PRV	6	Cla-Val	90G-01AB	217	45	321
~~3rd & Stewart~~ REMOVED	~~Small PRV~~	~~2~~	~~Cla-Val~~	~~90G01AJ~~	~~215~~	~~50~~	~~331~~
	~~Large PRV~~	~~--~~	~~--~~	~~--~~	~~--~~	~~--~~	~~--~~
~~3rd & Cherry~~ REMOVED	~~Small PRV~~	~~2~~	~~Cla-Val~~	~~90G-01AS~~	~~215~~	~~50~~	~~331~~
	~~Large PRV~~	~~--~~	~~--~~	~~--~~	~~--~~	~~--~~	~~--~~
~~3rd & Stella~~ REMOVED	~~Small PRV~~	~~2~~	~~Cla-Val~~	~~90G-01AS~~	~~215~~	~~50~~	~~331~~
	~~Large PRV~~	~~--~~	~~--~~	~~--~~	~~--~~	~~--~~	~~--~~
143rd & 268th	Small PRV	1-1/4	Cla-Val	90G-01AS	230	35	311
	Large PRV	4	Cla-Val	90G-01AB	230	30	299
NE Big Rock Road	Small PRV	4	Cla-Val	90G-01YBC	168	65	318
	Large PRV	10	Cla-Val	90G-01YBC	168	60	307
Stephens St & Broadway	Small PRV	3	Cla-Val	90G-01AS	183	55	310
	Large PRV	8	Cla-Val	90G-01AB	183	50	299
272nd & 143rd	Small PRV	3	Cla-Val	90G-01AS	295	45	399
	Large PRV	6	Cla-Val	90G-01AB	295	40	387
Sunset Heights 144th	Small PRV	2	Cla-Val	90G-01AS	287	55	414
	Large PRV	6	Cla-Val	90G-01AB	287	50	403
Millers Homestead	Small PRV	2	Cla-Val	90G-01YS	312	48	423
	Large PRV	6	Cla-Val	90G-01YBS	312	43	411
Bruett Road	Small PRV	2-1/2	Cla-Val	90G-01YCS	315	43	414
	Large PRV	8	Cla-Val	90G-01YBC	315	38	403
Kasper Heights	Small PRV	3	Cla-Val	90G-01YS	355	56	484
	Large PRV	8	Cla-Val	90G-01YBC	355	46	461
275th & 141st	Small PRV	2	Cla-Val	90G-01AS	331	62	474
	Large PRV	6	Cla-Val	90G-01AB	331	52	451
150th & 278th	Small PRV	2-1/2	Cla-Val	90G-01CSY	431	28	496
	Large PRV	8	Cla-Val	90G-01BCY	431	25	489
Manion & 156th	Small PRV	2	Cla-Val	90G-01YCS	429	30	498
	Large PRV	6	Cla-Val	90G-01BCY	429	27	491
282nd &140th	Small PRV	3	Cla-Val	90G-01ABCS	401	42	498
	Large PRV	8	Cla-Val	90G-01ABCS	401	39	491

City of Duvall
Comprehensive Water System Plan

Hydraulic Model Calibration

FIELD MEASUREMENTS														
				Hydrant Flow Tested					Hydrant Residual Pressure Measured					
No.	Date	Time	Location & Fire Hydrant Number	Static Pressure (psi)	Elv (ft)	Static HGL (ft)	Pitot Read (psi)	Flow Calc (gpm)	Location & Fire Hydrant Number	Static Pressure (psi)	Elv (ft)	Static HGL (ft)	Residual Pressure (psi)	Residual HGL (ft)
330 Pressure Zone														
1	12/1/2010	1:19 PM	SR 203 @ Pressure Relief (HYD 265)	117	75	345	84	1,540	Kennedy (HYD 241)	115	82	348	93	297
450 Pressure Zone														
2	11/30/2010	12 02 PM	16028 271st PL NE (HYD 181)	94	222	439	62	1,325	271st PL NE & 270th PL NE (HYD 179)	95	219	438	70	381
3	12/1/2010	12:33 PM	3rd Ave & 145th St (No ID)	74	266	437	44	1,125	3rd Ave & Comegy's St (HYD 247)	80	268	453	70	430
485 Pressure Zone														
4	11/30/2010	1:32 PM	275th Ave NE & NE 140th Ct (HYD 102)	77	319	497	52	1,225	275th Ave NE & NE 140th PL (HYD 100)	83	305	497	66	457
555 Pressure Zone														
5	11/30/2010	12:46 PM	275th Ave NE & NE 153rd PL (HYD 151)	58	427	561	45	1,130	275th Ave NE & 152nd (HYD 150)	62	417	560	54	542
6	11/30/2010	1:10 PM	275th Ave NE & NE 141st CT (HYD 104)	83	344	536	72	1,425	275th Ave NE & NE 141st PL (HYD 106)	70	368	530	62	511
615 Pressure Zone														
7	12/1/2010	11:16 AM	End of 286th	86	450	649	46	1,150	286th & 153rd	86	461	660	59	597
8	12/1/2010	11:43 AM	283rd & Roney (HYD 80)	84	462	656	50	1,190	282nd Ct & Roney Rd (HYD 81)	84	453	647	55	580

MODEL RESULTS										
	Hydrant Flow Tested Pressure				Hydrant Residual Pressure					
No.	Model Node	Static Pressure (ft)	Elv (ft)	Static HGL (ft)	Model Node	Static Pressure (ft)	Elv (ft)	Static HGL (ft)	Residual Pressure (psi)	Residual HGL (ft)
330 Pressure Zone										
1	J1106	112	75	334	J1112	108	82	331	101	315
450 Pressure Zone										
2	J1114	102	222	458	J1116	104	219	459	74	390
3	J1020	83	266	458	J1150	82	268	457	64	416
485 Pressure Zone										
4	J363	72	319	485	J234	78	305	485	66	457
555 Pressure Zone										
5	J500	55	427	554	J1118	59	417	553	51	535
6	J1122	90	344	552	J218	80	368	553	68	525
615 Pressure Zone										
7	J536	77	450	628	J3051	70	461	623	53	583
8	J1126	71	462	626	J1124	75	453	626	65	603

City of Duvall
2012 Comprehensive Water System Plan
Hydraulic Analyses Results - Fire Flow at 20 PSI

Model Node ID	Pressure Zone	Available Fire Flow (gpm)	
		Existing System	Future w/Improvements
J1	330	2,538	4,140
J10	330	2,942	4,192
J100	330	3,499	6,301
J1005	330	6,375	6,981
J1010	330	4,952	5,503
J102	330	3,396	6,233
J1046	330	3,939	4,150
J1048	330	3,457	6,096
J1054	330	2,693	4,875
J1055	330	4,402	3,384
J1056	330	1,853	3,091
J1058	330	1,686	2,381
J1068	330	3,919	4,297
J1072	330	2,412	4,996
J1074	330	2,125	4,996
J108	330	3,534	6,080
J1106	330	4,972	5,491
J1112	330	4,720	5,416
J1136	330	2,666	4,859
J1138	330	4,434	5,457
J1146	330	3,432	4,967
J1152	330	3,731	5,084
J12	330	2,697	4,867
J1206	330	4,421	5,471
J1208	330	4,390	5,458
J1224	330	3,905	4,367
J1241	330	2,702	2,931
J1246	330	3,716	4,669
J13	330	3,640	4,018
J130	330	4,433	5,473
J1370	330	2,928	3,332
J1380	330	3,032	3,689
J1390	330	4,117	4,944
J14	330	2,769	4,896
J1410	330	3,571	4,937
J1420	330	3,512	6,128
J1440	330	3,846	6,645
J1460	330	3,460	6,238
J1540	330	1,907	3,091
J1550	330	1,786	2,916
J1570	330	3,312	5,705
J1575	330	3,299	4,595

Model Node ID	Pressure Zone	Available Fire Flow (gpm)	
		Existing System	Future w/Improvements
J1580	330	4,210	4,968
J1590	330	3,206	5,490
J16	330	2,718	4,898
J1600	330	1,393	1,386
J1610	330	3,084	5,421
J1630	330	2,991	5,644
J164	330	2,430	4,125
J1660	330	2,684	4,883
J170	330	2,669	4,864
J1740	330	3,836	3,830
J1750	330	2,565	4,145
J1760	330	2,589	3,824
J1770	330	2,537	4,140
J1780	330	2,486	4,134
J18	330	2,698	4,869
J1810	330	1,846	2,663
J19	330	2,331	5,194
J2	330	2,538	2,813
J20	330	2,823	5,465
J21	330	2,715	4,900
J23	330	2,729	4,867
J24	330	2,810	5,435
J273	330	2,699	4,868
J28	330	2,716	4,869
J299	330	4,339	5,439
J3	330	866	863
J301	330	1,326	1,326
J302	330	4,353	5,430
J303	330	1,292	1,291
J304	330	1,243	1,242
J3071	330	6,898	6,624
J308	330	2,012	13,300
J309	330	2,655	5,283
J32	330	3,569	4,956
J34	330	2,992	3,803
J35	330	3,183	3,171
J4	330	2,565	4,145
J412	330	2,082	2,698
J422	330	3,669	6,383
J431	330	1,699	2,402
J439	330	2,580	3,846
J446	330	2,583	3,259
J449	330	931	927
J453	330	4,774	4,803
J462	330	2,707	4,872
J466	330	2,689	4,864

Model Node ID	Pressure Zone	Available Fire Flow (gpm)	
		Existing System	Future w/Improvements
J468	330	2,565	3,156
J475	330	2,756	4,909
J477	330	3,629	5,042
J491	330	4,393	5,452
J494	330	2,942	5,576
J502	330	2,605	4,147
J504	330	2,790	4,921
J510	330	2,776	4,322
J511	330	2,801	4,914
J523	330	2,119	2,102
J1244	330	n/a	3,558
J1248	330	n/a	4,676
J1000	450	5,201	5,202
J1044	450	4,100	4,668
J1076	450	2,385	2,464
J1078	450	3,369	3,923
J1082	450	2,612	2,844
J1084	450	3,086	3,466
J1090	450	3,720	4,612
J1108	450	1,962	3,346
J1110	450	3,315	4,408
J1114	450	1,742	1,737
J1116	450	1,699	1,693
J1130	450	3,604	4,537
J1140	450	3,631	3,057
J1150	450	3,643	3,061
J1154	450	1,853	3,248
J1168	450	2,130	2,140
J120	450	3,648	4,265
J1226	450	3,679	3,068
J1240	450	3,809	4,317
J1250	450	3,630	4,297
J1260	450	3,405	4,249
J1270	450	3,273	4,226
J1280	450	3,079	4,433
J131	450	2,763	3,122
J1310	450	2,899	2,918
J1320	450	1,956	1,954
J1530	450	2,435	3,566
J1540	450	1,907	3,373
J1550	450	1,786	3,108
J1800	450	2,132	2,143
J1810	450	1,846	2,796
J277	450	2,549	2,559
J278	450	1,090	1,078
J279	450	803	795

Model Node ID	Pressure Zone	Available Fire Flow (gpm)	
		Existing System	Future w/Improvements
J281	450	956	939
J284	450	380	778
J286	450	881	934
J288	450	5,549	4,438
J289	450	1,097	1,094
J292	450	3,269	3,537
J293	450	946	943
J294	450	1,702	1,697
J295	450	1,652	1,646
J296	450	1,753	1,749
J297	450	1,596	1,589
J298	450	2,134	2,148
J3010	450	5,685	5,673
J3031	450	5,425	5,418
J3600	450	6,010	5,987
J41	450	3,795	3,865
J429	450	5,900	5,890
J43	450	3,648	3,060
J518	450	6,010	5,987
J525	450	3,762	4,652
J527	450	2,172	4,146
J531	450	6,087	6,068
J535	450	1,367	5,120
J542	450	5,425	5,418
J55	450	1,897	3,960
J285	450	n/a	3,272
J1050	450	n/a	3,060
J1142	450	n/a	3,694
J1210	450	n/a	4,164
J1300	450	n/a	3,944
J81	450	n/a	3,401
J8600	450	n/a	4,589
J1062	555	1,924	1,911
J1064	555	2,505	2,474
J1118	555	1,814	2,337
J1122	555	2,108	3,589
J1128	555	2,563	3,610
J1134	555	1,814	1,769
J1158	555	3,864	3,796
J1164	555	2,868	3,106
J1192	555	3,147	3,190
J12400	555	2,526	2,356
J125	555	2,020	2,046
J12600	555	1,774	1,895
J127	555	1,757	1,846
J12800	555	1,728	1,764

Model Node ID	Pressure Zone	Available Fire Flow (gpm)	
		Existing System	Future w/Improvements
J129	555	1,803	1,979
J134	555	2,315	2,210
J135	555	2,498	2,548
J136	555	2,697	2,672
J137	555	2,944	2,802
J138	555	3,429	3,465
J139	555	3,951	3,503
J142	555	1,514	1,466
J143	555	1,405	1,391
J144	555	1,833	2,009
J145	555	1,833	1,995
J146	555	1,620	1,924
J147	555	1,199	1,315
J148	555	1,883	2,631
J149	555	1,883	2,192
J183	555	2,706	3,625
J184	555	2,674	3,646
J185	555	2,590	3,642
J186	555	2,553	3,637
J187	555	2,403	3,628
J188	555	2,548	3,636
J189	555	2,642	2,784
J191	555	3,023	3,671
J192	555	3,113	3,703
J193	555	3,081	3,046
J194	555	2,605	2,581
J195	555	2,467	2,434
J196	555	2,224	2,190
J197	555	5,230	5,275
J198	555	858	839
J199	555	1,081	1,059
J201	555	1,644	1,611
J202	555	1,664	1,631
J203	555	1,662	1,628
J204	555	3,388	3,424
J205	555	2,590	2,582
J206	555	2,794	2,784
J208	555	710	692
J209	555	3,271	3,291
J211	555	701	683
J213	555	720	701
J214	555	2,274	2,302
J215	555	2,289	3,615
J216	555	2,234	2,433
J217	555	2,289	2,714
J218	555	2,452	3,490

Model Node ID	Pressure Zone	Available Fire Flow (gpm)	
		Existing System	Future w/Improvements
J219	555	676	657
J221	555	1,985	2,323
J222	555	694	688
J223	555	1,644	2,149
J224	555	797	810
J225	555	3,534	3,470
J226	555	723	728
J227	555	3,593	3,658
J231	555	4,273	4,830
J232	555	2,720	2,927
J233	555	3,755	4,282
J250	555	4,851	3,488
J255	555	3,507	3,461
J268	555	1,371	2,144
J269	555	1,428	2,193
J270	555	3,880	3,768
J271	555	1,434	2,341
J272	555	5,106	4,852
J274	555	3,564	3,462
J280	555	5,037	4,773
J3000	555	1,657	1,624
J3002	555	2,386	2,449
J3003	555	1,870	2,609
J3004	555	1,572	1,512
J3005	555	3,781	3,397
J344	555	3,923	3,487
J346	555	3,117	3,081
J347	555	2,654	2,632
J348	555	1,639	1,635
J437	555	1,250	1,205
J455	555	5,248	5,279
J459	555	4,896	5,840
J461	555	5,033	5,687
J464	555	2,149	2,512
J465	555	3,580	3,456
J467	555	4,193	4,324
J469	555	2,199	2,432
J470	555	3,870	4,057
J472	555	3,832	4,057
J474	555	3,620	3,705
J476	555	3,521	3,466
J478	555	3,583	5,068
J480	555	4,314	4,918
J482	555	4,300	4,197
J484	555	4,130	4,099
J486	555	2,825	3,669

Model Node ID	Pressure Zone	Available Fire Flow (gpm)	
		Existing System	Future w/Improvements
J492	555	3,049	3,046
J497	555	4,031	3,545
J498	555	2,154	2,529
J500	555	1,547	2,056
J503	555	2,115	2,491
J505	555	3,270	3,250
J508	555	2,606	2,560
J509	555	2,898	2,869
J512	555	2,547	2,464
J515	555	2,070	2,032
J517	555	1,882	1,842
J519	555	717	703
J521	555	1,737	1,694
J529	555	1,672	1,639
J363	485/555	3,792	4,250
J364	485/555	1,830	2,372
J365	485/555	1,550	1,923
J417	485/555	4,081	3,989
J428	485/555	4,475	4,861
J495	485/555	5,056	4,877
J10000	615	3,510	2,945
J101	615	2,553	1,756
J10200	615	2,548	1,685
J103	615	2,550	1,682
J104	615	2,571	2,727
J10400	615	2,373	1,523
J107	615	2,308	1,465
J109	615	2,358	1,565
J1094	615	2,578	2,757
J1096	615	2,561	2,253
J1098	615	2,555	1,883
J11	615	2,390	1,665
J110	615	3,660	3,105
J1102	615	2,593	2,562
J1104	615	2,573	1,936
J112	615	2,511	1,739
J1124	615	3,687	3,193
J1126	615	3,543	2,911
J113	615	2,511	1,737
J11400	615	2,451	1,596
J115	615	2,505	1,647
J1169	615	3,097	2,681
J118	615	2,510	1,866
J119	615	2,504	1,715
J1200	615	3,662	4,470
J121	615	2,513	1,798

Model Node ID	Pressure Zone	Available Fire Flow (gpm)	
		Existing System	Future w/Improvements
J123	615	2,521	1,806
J133	615	2,351	1,624
J140	615	3,155	3,158
J141	615	2,319	1,943
J150	615	3,114	2,922
J151	615	2,073	1,906
J152	615	1,649	1,234
J153	615	2,402	1,507
J154	615	1,616	1,242
J155	615	2,313	1,498
J157	615	1,797	1,441
J158	615	1,656	1,366
J159	615	2,517	1,623
J160	615	3,095	2,878
J161	615	1,897	1,429
J163	615	3,435	2,783
J165	615	3,559	2,939
J167	615	2,142	1,868
J169	615	2,990	2,701
J171	615	2,016	1,714
J172	615	2,555	1,802
J173	615	2,352	1,725
J174	615	2,711	2,209
J175	615	2,626	2,059
J176	615	2,512	1,674
J180	615	2,770	2,131
J190	615	3,077	2,836
J200	615	2,282	2,090
J210	615	2,198	1,909
J220	615	2,081	1,753
J230	615	2,101	1,760
J235	615	3,095	2,624
J236	615	3,065	2,502
J237	615	3,121	2,767
J238	615	3,121	2,962
J239	615	3,660	3,296
J240	615	3,095	2,568
J242	615	3,681	3,349
J245	615	4,089	5,298
J246	615	3,764	3,268
J247	615	3,732	3,100
J248	615	3,235	2,542
J249	615	3,106	2,379
J251	615	3,042	2,325
J252	615	3,068	2,330
J253	615	2,358	2,003

Model Node ID	Pressure Zone	Available Fire Flow (gpm)	
		Existing System	Future w/Improvements
J254	615	1,932	1,766
J258	615	4,410	5,124
J259	615	2,650	2,540
J263	615	1,683	1,576
J264	615	1,798	1,702
J265	615	4,788	4,593
J266	615	2,438	2,312
J267	615	2,393	1,687
J275	615	2,252	2,215
J276	615	2,198	2,091
J29	615	1,678	1,429
J30	615	5,463	4,682
J3001	615	2,410	1,506
J3051	615	2,342	1,652
J3061	615	2,478	1,702
J310	615	2,729	1,882
J313	615	2,552	1,601
J320	615	2,553	1,750
J340	615	2,696	2,051
J345	615	2,832	2,174
J349	615	2,453	1,744
J350	615	2,544	1,655
J351	615	2,453	1,749
J352	615	2,307	1,499
J355	615	3,188	3,173
J356	615	2,535	2,442
J357	615	2,608	2,602
J358	615	2,580	2,480
J359	615	2,051	1,924
J360	615	2,446	1,521
J384	615	2,137	1,562
J388	615	2,982	2,546
J402	615	2,407	1,528
J413	615	1,638	1,317
J419	615	3,590	3,676
J423	615	2,612	1,897
J427	615	4,300	5,192
J432	615	2,521	1,613
J433	615	2,521	1,624
J435	615	2,374	1,520
J436	615	2,477	1,584
J438	615	2,510	1,723
J440	615	2,489	1,545
J442	615	2,499	1,644
J443	615	2,505	1,672
J444	615	2,502	1,679

Model Node ID	Pressure Zone	Available Fire Flow (gpm)	
		Existing System	Future w/Improvements
J448	615	2,458	1,717
J451	615	2,273	1,561
J452	615	2,476	1,510
J454	615	2,582	2,342
J456	615	2,661	2,639
J458	615	2,711	2,569
J481	615	3,051	2,457
J485	615	3,051	2,255
J487	615	2,567	1,879
J490	615	2,534	1,737
J5000	615	5,033	4,185
J520	615	2,490	1,695
J522	615	1,985	1,521
J524	615	3,770	4,980
J526	615	1,833	1,458
J528	615	1,735	1,404
J530	615	1,681	1,383
J534	615	3,641	3,220
J536	615	1,958	1,559
J538	615	2,169	1,609
J540	615	2,307	1,602
J541	615	2,380	1,570
J6000	615	4,930	4,491
J69	615	2,506	1,701
J71	615	2,506	1,809
J72	615	3,097	2,844
J7800	615	4,212	5,455
J145	615	n/a	1,715
J148	615	n/a	2,078
J149	615	n/a	1,995
J405	615	n/a	2,462
J3002	615	n/a	1,750

City of Duvall
2012 Comprehensive Water System Plan
Hydraulic Analyses Results - Pressures during Peak Hour Demand

Model		Existing System			Future System		
Node ID	Elevation (ft)	Demand (gpm)	Head (ft)	Pressure (psi)	Demand (gpm)	Head (ft)	Pressure (psi)
J1	197	5.4	332	59	12.7	325	55
J10	95	0.7	332	103	1.7	324	99
J100	92	0.0	332	104	0.0	324	101
J1000	180	0.0	432	109	0.0	425	106
J10000	464	2.2	623	69	5.3	613	64
J1003	121	0.4	332	91	1.0	324	88
J1005	112	0.5	332	95	1.2	324	92
J101	480	8.9	612	57	21.1	599	51
J1010	135	0.5	332	85	1.2	324	82
J102	59	0.0	332	118	0.0	324	115
J1020	266	2.9	424	68	6.9	416	65
J10200	480	4.1	612	57	9.8	598	51
J103	478	4.1	612	58	9.8	598	52
J104	420	0.0	612	83	0.0	599	77
J10400	488	4.1	612	54	9.8	598	48
J1044	285	0.0	424	60	0.0	417	57
J1046	209	0.0	332	53	0.0	324	50
J1048	96	0.0	332	102	0.0	324	99
J-1048	169	0.0	332	71	0.0	324	67
J105	489	4.1	612	53	9.8	598	47
J1050	195	1.2	424	99	2.9	416	96
J1052	123.8	0.0	332	90	0.0	324	87
J1054	127	0.0	332	89	0.0	324	86
J1055	137	10.8	332	84	25.4	324	81
J1056	217.5	0.0	332	50	0.0	324	46
J1058	223.8	0.0	332	47	0.0	324	43
J106	149	0.7	332	79	1.7	324	76
J1060	80	0.8	332	109	1.8	324	106
J1062	411	0.0	522	48	0.0	510	43
J1064	408	0.0	522	49	0.0	510	44
J1068	191	0.0	332	61	0.0	324	57
J107	490	4.1	612	53	9.8	598	47
J1070	77	1.2	332	110	2.9	324	107
J1072	203	0.0	332	56	0.0	324	52
J1074	219	0.0	332	49	0.0	324	45
J1076	280	0.0	424	62	0.0	417	59
J1078	287	0.0	424	59	0.0	417	56
J108	144	6.5	332	81	15.3	324	78
J1080	76	1.2	332	111	2.9	324	107
J1082	304	0.0	424	52	0.0	417	49
J1084	302	0.0	424	53	0.0	417	50
J1086	245	0.0	424	78	0.0	416	74
J1088	255	0.0	424	73	0.0	416	70
J109	483	4.1	612	56	9.8	598	50
J1090	267	0.0	424	68	0.0	416	65
J1092	255	0.0	424	73	0.0	416	70
J1094	421	0.0	612	83	0.0	599	77
J1096	439	0.0	612	75	0.0	599	69
J1098	469	0.0	612	62	0.0	599	56
J11	452	1.4	612	69	3.4	598	63
J110	455	2.2	624	73	5.3	613	68
J1100	172	2.8	332	69	6.6	324	66
J1102	427	0.0	612	80	0.0	598	74
J1104	461	0.0	612	66	0.0	598	60
J1106	75	0.0	332	111	0.0	324	108
J1108	232	0.0	422	82	0.0	411	78
J111	487	4.1	612	54	9.8	598	48
J1110	233	2.8	423	83	6.6	415	79
J1112	82	0.0	332	108	0.0	324	105

Model		Existing System			Future System		
Node ID	Elevation (ft)	Demand (gpm)	Head (ft)	Pressure (psi)	Demand (gpm)	Head (ft)	Pressure (psi)
J1114	222	0.0	422	87	0.0	411	82
J1116	219	0.0	422	88	0.0	411	83
J1118	417	0.0	522	45	0.0	508	40
J112	473	3.2	612	60	7.6	598	54
J1120	248	2.9	424	76	6.9	416	73
J1122	344	0.0	522	77	0.0	512	73
J1124	453	0.0	624	74	0.0	614	70
J1126	462	0.0	623	70	0.0	613	65
J1128	375	0.0	522	64	0.0	512	59
J113	473	3.2	612	60	7.6	598	54
J1130	220	2.9	424	88	6.9	416	85
J1132	479	0.0	619	61	0.0	606	55
J1134	324	0.0	522	86	0.0	511	81
J1136	179	0.0	332	66	0.0	324	63
J1138	91	0.0	332	104	0.0	324	101
J1140	214	2.9	424	91	6.9	416	88
J11400	472	3.4	612	61	8.0	598	55
J1142	270	0.0	423	66	0.0	415	63
J1144	151	0.0	332	78	0.0	324	75
J1146	163	0.0	332	73	0.0	324	70
J1148	135	0.0	332	85	0.0	324	82
J115	470	3.4	612	62	8.0	598	56
J1150	268	2.9	424	68	6.9	416	64
J1152	87	0.0	332	106	0.0	324	103
J1154	258	0.0	422	71	0.0	412	67
J1156	463	0.0	618	67	0.0	610	64
J1158	415	0.0	522	47	0.0	514	43
J1160	74	0.0	332	112	0.0	324	108
J1162	385	0.0	522	59	0.0	512	55
J1164	403	0.0	522	52	0.0	512	47
J1166	474	0.0	614	61	0.0	602	56
J1168	199	0.0	422	97	0.0	411	92
J1169	416	4.0	619	88	9.4	607	83
J117	122	5.1	332	91	12.1	324	87
J1170	150	0.0	332	79	0.0	324	75
J1172	187	0.0	332	63	0.0	324	59
J1174	169	0.0	332	71	0.0	324	67
J1176	467	0.0	623	68	0.0	613	63
J118	462	3.6	612	65	8.6	598	59
J1180	199	0.0	332	58	0.0	325	54
J1182	416	0.0	522	46	0.0	513	42
J1184	156	0.0	332	76	0.0	324	73
J1186	416	0.0	522	46	0.0	513	42
J1188	405	0.0	522	51	0.0	513	47
J119	457	3.4	612	67	8.0	598	61
J1190	158	0.0	332	75	0.0	324	72
J1192	408	0.0	522	49	0.0	509	44
J1194	472	0.0	615	62	0.0	605	58
J1196	476	0.0	617	61	0.0	610	58
J1198	77	0.0	332	110	0.0	324	107
J12	165	0.7	332	72	1.7	324	69
J120	195	0.0	424	99	0.0	416	96
J1200	413	0.2	624	91	0.5	613	87
J1201	96	2.8	332	102	6.5	324	99
J1202	145	0.0	332	81	0.0	324	77
J1204	90	0.0	332	105	0.0	324	101
J1206	108	0.0	332	97	0.0	324	93
J1208	142	0.0	332	82	0.0	324	79
J121	448	3.4	612	71	8.0	598	65
J1210	256	2.8	423	73	6.6	415	69
J1212	79	0.0	332	110	0.0	324	106
J1214	250	0.0	432	79	0.0	430	78
J1216	250	0.0	432	79	0.0	430	78

Model		Existing System			Future System		
Node ID	Elevation (ft)	Demand (gpm)	Head (ft)	Pressure (psi)	Demand (gpm)	Head (ft)	Pressure (psi)
J1218	250	0.0	432	79	0.0	430	78
J1220	450	0.0	632	79	0.0	620	74
J12200	433	3.4	612	78	8.0	598	72
J1222	473	0.0	632	69	0.0	620	64
J1224	180	0.0	332	66	0.0	324	62
J1226	243	0.0	424	78	0.0	416	75
J1228	268	0.0	424	68	0.0	417	64
J123	450	3.4	612	70	8.0	598	64
J1232	312	0.0	424	48	0.0	415	45
J1234	289	0.0	432	62	0.0	429	61
J1236	296	0.0	424	55	0.0	417	52
J1240	227	0.7	423	85	1.7	415	81
J12400	421	0.3	522	44	0.7	509	38
J1241	194	0.7	332	60	1.7	324	56
J1244	148	0.0	332	80	0.0	324	76
J1246	110	0.0	332	96	0.0	324	93
J1248	101	0.0	332	100	0.0	324	97
J125	426	1.9	522	41	4.5	509	36
J1250	223	0.7	423	87	1.7	414	83
J1256	311	0.0	422	48	0.0	412	44
J1258	318	0.0	422	45	0.0	508	82
J1260	230	1.2	423	84	2.9	414	80
J12600	431	1.9	522	39	4.5	508	34
J1262	364	0.0	484	52	0.0	512	64
J1264	365	0.0	522	68	0.0	512	63
J127	432	1.9	522	39	4.5	508	33
J1270	234	1.7	423	82	4.1	414	78
J1272	199	0.0	332	58	0.0	324	54
J1274	216	0.0	332	50	0.0	324	47
J1276	142	0.0	332	82	0.0	324	79
J1280	264	4.5	423	69	10.6	414	65
J12800	434	0.3	522	38	0.7	508	32
J129	432	0.3	522	39	0.7	509	33
J1290	272	4.5	423	65	10.6	414	62
J13	181	0.0	332	65	0.0	324	62
J130	137	0.0	332	84	0.0	324	81
J1300	269	4.5	423	67	10.6	414	63
J13000	415	4.4	624	90	10.4	612	86
J131	278	2.8	423	63	6.6	414	59
J1310	278	3.0	423	63	7.0	414	59
J1320	288	3.0	423	58	7.0	414	55
J133	454	1.4	612	69	3.4	598	62
J1330	172	0.7	332	69	1.7	324	66
J134	423	2.5	522	43	5.8	509	37
J1340	158	0.7	332	75	1.7	324	72
J135	413	2.0	522	47	4.7	509	41
J136	413	2.0	522	47	4.7	509	41
J137	416	2.0	522	46	4.7	509	40
J1370	210	1.2	332	53	2.9	324	49
J138	418	2.0	522	45	4.7	509	39
J1380	210	1.4	332	53	3.4	324	49
J139	411	2.8	522	48	6.6	509	42
J1390	138	1.2	332	84	2.9	324	81
J14	118	0.7	332	93	1.7	324	89
J140	420	4.0	620	87	9.4	608	81
J141	433	27.5	612	78	65.1	598	72
J1410	115	1.4	332	94	3.4	324	91
J1420	128	1.7	332	88	4.1	324	85
J143	427	3.1	522	41	7.2	508	35
J1430	112	2.2	332	95	5.3	324	92
J144	427	13.8	522	41	32.6	508	35
J1440	80	1.2	332	109	2.9	324	106
J145	411	13.8	522	48	32.6	508	42

Model		Existing System			Future System		
Node ID	Elevation (ft)	Demand (gpm)	Head (ft)	Pressure (psi)	Demand (gpm)	Head (ft)	Pressure (psi)
J1450	70	1.2	332	113	2.9	324	110
J146	420	3.1	522	44	7.2	508	38
J1460	95	5.1	332	103	12.1	324	99
J147	425	3.1	522	42	7.2	508	36
J148	388	3.1	522	58	7.2	508	52
J1480	271	2.8	423	66	6.6	414	62
J149	365	3.1	522	68	7.2	508	62
J1490	235	2.8	423	81	6.6	413	77
J15	121	3.3	332	91	7.8	324	88
J150	410	4.0	620	91	9.4	607	85
J1500	235	2.8	422	81	6.6	412	77
J151	435	6.9	612	77	16.3	598	71
J1510	230	2.8	422	83	6.6	411	79
J152	476	6.9	612	59	16.3	598	53
J153	485	5.5	612	55	13.0	598	49
J1530	256	2.8	423	72	6.6	412	68
J154	483	5.5	612	56	13.0	598	50
J1540	260	0.7	422	70	1.7	412	66
J155	482	5.5	612	56	13.0	598	50
J1550	244	0.7	422	77	1.7	412	73
J156	480	5.5	612	57	13.0	598	51
J1565	124	0.9	332	90	2.2	324	87
J157	461	4.4	612	66	10.4	598	59
J1570	100	0.4	332	100	1.0	324	97
J1575	115	0.7	332	94	1.7	324	91
J158	462	4.4	612	65	10.4	598	59
J1580	57	3.8	332	119	9.0	324	116
J159	484	0.1	612	56	0.1	598	50
J1590	93	7.1	332	104	16.9	324	100
J16	132	2.0	332	87	4.7	324	83
J160	428	4.0	620	83	9.4	607	77
J1600	199	2.8	332	58	6.6	324	54
J161	478	8.2	612	58	19.4	598	52
J1610	82	0.7	332	108	1.7	324	105
J162	490	8.9	612	53	21.1	599	47
J163	466	2.2	622	68	5.3	612	63
J1630	72	10.2	332	113	24.1	324	109
J164	200	0.7	332	57	1.7	325	54
J165	464	3.1	623	69	7.2	613	64
J166	148	0.0	332	80	0.1	324	76
J1660	160	0.7	332	75	1.7	324	71
J167	473	4.0	619	63	9.4	606	58
J168	126	2.0	332	89	4.7	324	86
J169	440	4.0	619	77	9.4	606	72
J17	111	3.3	332	96	7.8	324	92
J170	138	0.0	332	84	0.1	324	81
J171	480	4.0	619	60	9.4	606	54
J172	479	2.9	612	58	6.9	599	52
J1720	120	0.0	332	92	0.1	324	89
J173	473	2.9	612	60	6.9	599	54
J1730	130	0.0	332	88	0.1	324	84
J174	425	2.4	613	81	5.7	599	76
J1740	142	0.0	332	82	0.1	324	79
J175	429	2.4	613	80	5.7	599	74
J1750	182	5.4	332	65	12.7	325	62
J176	496	1.9	610	49	4.6	598	44
J1760	132	1.0	332	87	2.4	324	83
J177	490	1.9	610	52	4.6	598	47
J1770	197	5.4	332	59	12.7	325	55
J178	477	1.9	613	59	4.6	602	54
J1780	210	5.4	332	53	12.7	325	50
J179	477	2.8	612	59	6.6	598	53
J18	150	0.1	332	79	0.1	324	76

Model		Existing System			Future System		
Node ID	Elevation (ft)	Demand (gpm)	Head (ft)	Pressure (psi)	Demand (gpm)	Head (ft)	Pressure (psi)
J180	468	1.9	613	63	4.6	600	57
J1800	206	2.8	422	94	6.6	411	89
J181	448	2.8	612	71	6.6	598	65
J1810	224	0.8	422	86	1.9	411	81
J182	480	0.1	612	57	0.1	598	51
J183	400	2.8	522	53	6.6	509	47
J184	396	1.2	522	54	2.9	509	49
J185	395	1.2	522	55	2.9	509	49
J186	368	1.2	522	67	2.9	509	61
J187	373	1.2	522	64	2.9	509	59
J188	395	1.2	522	55	2.9	509	49
J189	395	1.2	522	55	2.9	509	49
J19	145	1.0	332	81	2.4	324	78
J190	415	4.0	619	89	9.4	606	83
J191	340	1.2	522	79	2.9	509	73
J192	346	1.2	522	76	2.9	509	71
J193	417	1.7	522	46	4.0	514	42
J194	410	1.7	522	49	4.0	513	45
J195	411	1.7	522	48	4.0	512	44
J196	419	1.7	522	45	4.0	514	41
J197	416	4.8	522	46	11.3	514	43
J198	384	7.2	522	60	16.9	511	55
J199	342	7.2	522	78	16.9	511	73
J2	193	5.4	332	60	12.7	325	57
J20	100	0.7	332	101	1.7	324	97
J200	460	4.0	619	69	9.4	606	63
J201	362	5.7	522	69	13.5	511	65
J202	300	5.7	522	96	13.5	511	91
J203	297	2.8	522	97	6.6	511	93
J204	404	2.3	522	51	5.4	510	46
J205	405	2.3	522	51	5.4	510	45
J206	406	2.3	522	50	5.4	510	45
J208	405	2.3	522	51	5.4	509	45
J209	403	2.3	522	51	5.4	509	46
J21	126	2.0	332	89	4.7	324	86
J210	470	4.0	619	64	9.4	606	59
J211	404	2.3	522	51	5.4	509	46
J212	404	2.3	522	51	5.4	509	45
J213	404	2.3	522	51	5.4	509	45
J214	401	1.2	522	52	2.9	509	47
J215	381	1.2	522	61	2.9	508	55
J216	376	1.2	522	63	2.9	508	57
J217	389	1.2	522	58	2.9	508	52
J218	367	2.9	522	67	6.8	512	63
J219	413	2.3	522	47	5.4	510	42
J22	162	0.5	332	74	1.2	324	70
J220	479	4.0	619	61	9.4	606	55
J221	392	2.9	522	56	6.8	512	52
J222	402	2.9	522	52	6.8	512	48
J223	383	2.9	522	60	6.8	512	56
J224	390	2.9	522	57	6.8	512	53
J225	410	4.0	522	49	9.5	512	44
J226	406	8.1	522	50	19.0	512	46
J227	412	2.2	522	48	5.3	512	43
J23	106	2.0	332	98	4.7	324	95
J230	480	4.0	619	60	9.4	606	54
J231	391	5.4	522	57	12.7	512	52
J232	406	5.4	522	50	12.7	512	46
J233	376	2.0	522	63	4.7	512	59
J234	305	2.9	484	78	6.8	512	89
J235	416	4.0	620	88	9.4	607	83
J236	419	4.0	620	87	9.4	607	81
J237	416	4.0	620	88	9.4	607	83

Model		Existing System			Future System		
Node ID	Elevation (ft)	Demand (gpm)	Head (ft)	Pressure (psi)	Demand (gpm)	Head (ft)	Pressure (psi)
J238	413	4.0	620	90	9.4	607	84
J239	442	8.0	624	79	19.0	613	74
J24	100	0.0	332	101	0.0	324	97
J240	416	4.0	620	88	9.4	607	83
J241	436	8.0	624	81	19.0	613	77
J242	446	2.2	624	77	5.3	613	72
J243	443	2.2	624	78	5.3	613	74
J244	441	2.2	624	79	5.3	613	75
J245	412	0.3	627	93	0.7	616	88
J246	454	3.1	625	74	7.4	614	69
J247	462	3.1	625	70	7.4	614	66
J248	464	3.9	621	68	9.3	611	64
J249	467	3.9	621	67	9.3	611	62
J250	403	5.4	522	52	12.7	512	47
J251	470	3.9	621	65	9.3	611	61
J252	472	3.9	621	64	9.3	611	60
J253	470	0.2	621	65	0.5	611	61
J254	469	0.2	621	66	0.5	612	62
J255	405	5.4	522	51	12.7	512	46
J256	461	3.1	625	71	7.2	614	66
J257	454	3.1	625	74	7.2	614	69
J258	422	0.3	628	89	0.7	617	84
J259	464	3.1	628	71	7.4	617	66
J2600	183	0.0	332	65	0.0	324	61
J263	466	3.1	628	70	7.4	617	65
J264	451	3.1	628	77	7.4	617	72
J265	443	0.3	629	81	0.7	617	75
J266	478	0.2	629	65	0.5	617	60
J267	464	3.1	612	64	7.2	598	58
J268	414	2.8	522	47	6.6	508	41
J269	418	2.8	522	45	6.6	508	39
J27	406	0.2	625	95	0.5	614	90
J270	412	8.0	522	48	19.0	512	43
J271	386	14.7	522	59	34.7	508	53
J272	406	0.0	522	50	0.0	513	46
J273	150	0.1	332	79	0.1	324	76
J274	410	8.0	522	49	19.0	512	44
J275	460	3.1	628	73	7.4	617	68
J276	457	3.1	628	74	7.4	617	69
J277	296	4.5	423	55	10.6	414	51
J278	264	4.5	423	69	10.6	414	65
J279	270	4.5	423	66	10.6	414	62
J28	130	0.0	332	88	0.0	324	84
J280	402	5.4	522	52	12.7	512	47
J281	284	3.0	423	60	7.0	414	56
J282	272	2.8	423	65	6.6	414	61
J283	272	2.8	423	65	6.6	414	62
J284	284	2.8	423	60	6.6	415	57
J285	295	2.8	423	56	6.6	415	52
J286	242	2.8	423	79	6.6	415	75
J287	237	2.8	423	81	6.6	415	77
J288	254	7.3	424	74	17.3	416	70
J289	247	7.3	424	77	17.3	416	73
J29	445	0.2	612	73	0.4	598	66
J290	404	0.2	522	51	0.5	512	47
J291	258	7.3	424	72	17.3	416	68
J292	262	7.3	424	70	17.3	416	67
J293	200	1.2	424	97	2.9	416	94
J294	217	2.8	422	89	6.5	411	84
J295	278	2.8	422	62	6.5	411	58
J296	226	2.8	422	85	6.5	411	80
J297	290	2.8	422	57	6.5	411	53
J298	187	7.0	422	102	16.5	411	97

Model		Existing System			Future System		
Node ID	Elevation (ft)	Demand (gpm)	Head (ft)	Pressure (psi)	Demand (gpm)	Head (ft)	Pressure (psi)
J299	148	1.8	332	80	4.2	324	76
J3	193	5.4	332	60	12.7	325	57
J30	480	0.0	631	65	0.0	617	60
J300	385	2.0	522	59	4.7	512	55
J3000	349	5.7	522	75	13.5	511	70
J3001	486	5.5	612	55	13.0	598	49
J3002	435	3.1	522	38	7.2	508	32
J3003	390	3.1	522	57	7.2	508	51
J3005	433	3.6	522	38	8.6	509	33
J3008	340	2.9	522	79	6.8	512	74
J301	132	1.8	332	87	4.2	324	83
J3010	318	0.0	432	50	0.0	430	49
J302	149	1.8	332	79	4.2	324	76
J303	128	1.8	332	88	4.2	324	85
J3031	278	0.0	432	67	0.0	428	65
J304	176	3.9	332	68	9.3	324	64
J305	199	2.8	332	58	6.6	324	54
J3051	461	4.4	612	66	10.4	598	59
J306	210	2.8	332	53	6.6	324	49
J3061	469	4.4	612	62	10.4	598	56
J307	94	0.5	332	103	1.1	324	100
J3071	132	0.5	332	87	1.1	324	83
J308	95	0.5	332	103	1.1	324	99
J309	117	0.0	332	93	0.1	324	90
J31	128	1.2	332	88	2.9	324	85
J310	484	1.9	612	55	4.6	599	50
J311	116	0.0	332	94	0.1	324	90
J-312	168	15.3	332	71	36.2	324	67
J313	492	0.0	606	49	0.0	594	44
J314	222	0.7	422	87	1.7	411	82
J315	208	0.0	423	93	0.0	415	90
J32	149	1.2	332	79	2.9	324	76
J320	491	1.9	610	51	4.6	598	46
J323	436	0.0	629	84	0.0	619	79
J324	436	0.0	629	84	0.0	619	79
J325	436	0.0	629	84	0.0	619	79
J326	436	0.0	629	84	0.0	619	79
J327	208	0.0	332	54	0.0	324	50
J328	287	0.0	424	59	0.0	417	56
J329	214	0.7	332	51	1.7	325	48
J33	131	0.0	332	87	0.1	324	84
J331	287	0.0	522	102	0.0	511	97
J332	163	0.0	332	73	0.0	324	70
J333	163	0.0	424	113	0.0	416	110
J334	232	1.7	423	83	4.1	413	79
J337	295	0.0	426	57	0.0	417	53
J338	295	0.0	522	98	0.0	511	94
J339	274	0.0	640	159	0.0	640	159
J34	155	2.8	332	77	6.6	324	73
J340	476	1.9	613	59	4.6	602	55
J341	472	0.0	645	75	0.0	645	75
J342	472	0.0	632	69	0.0	622	65
J343	220	0.7	332	49	1.7	326	46
J344	408	2.5	522	49	5.8	509	44
J345	474	0.1	614	61	0.1	604	56
J346	410	5.0	522	48	11.8	509	43
J347	418	3.9	522	45	9.3	509	39
J348	416	3.9	522	46	9.3	509	40
J349	449	1.4	612	71	3.4	598	65
J35	98	3.3	332	101	7.8	324	98
J350	490	8.9	612	53	21.1	599	47
J351	442	1.4	612	74	3.4	598	68
J352	476	6.9	612	59	16.3	598	53

Model		Existing System			Future System		
Node ID	Elevation (ft)	Demand (gpm)	Head (ft)	Pressure (psi)	Demand (gpm)	Head (ft)	Pressure (psi)
J353	473	6.9	612	60	16.3	598	54
J355	462	0.2	629	72	0.5	617	67
J356	460	0.2	629	73	0.5	617	68
J357	472	0.2	629	68	0.5	617	63
J358	469	0.2	629	69	0.5	617	64
J359	478	0.2	629	65	0.5	617	60
J36	192	2.8	332	61	6.6	324	57
J360	497	8.9	612	50	21.1	599	44
J3600	280	0.0	432	66	0.0	429	65
J361	274	0.0	432	68	0.0	430	68
J363	319	2.9	484	72	6.8	512	83
J364	358	4.5	484	55	10.6	512	67
J365	372	4.5	484	49	10.6	512	60
J369	401	0.0	522	52	0.0	512	48
J378	312	0.0	522	91	0.0	509	85
J384	468	25.5	612	63	60.3	598	56
J388	440	0.0	616	76	0.0	603	71
J397	196	0.7	332	59	1.7	324	56
J398	315	0.0	522	90	0.0	508	84
J399	315	0.0	423	47	0.0	414	43
J4	182	5.4	332	65	12.7	325	62
J401	420	0.0	522	44	0.0	514	41
J402	495	8.9	612	51	21.1	599	45
J403	429	0.0	612	79	0.0	598	73
J404	429	0.0	522	40	0.0	508	34
J405	431	0.0	612	79	0.0	598	72
J406	331	0.0	484	66	0.0	512	78
J407	355	0.0	484	56	0.0	512	68
J408	168	0.0	432	114	0.0	421	110
J409	168	0.0	332	71	0.0	324	67
J41	264	2.8	424	69	6.6	416	66
J411	312	0.0	424	48	0.0	415	45
J412	235	2.8	332	42	6.6	324	39
J413	490	8.9	612	53	21.1	599	47
J414	183	0.0	423	104	0.0	414	100
J415	183	0.0	332	65	0.0	324	61
J416	97	19.4	332	102	45.8	324	98
J417	328	0.0	484	68	0.0	512	80
J418	224	0.0	423	86	0.0	414	82
J419	420	0.0	623	88	0.0	611	83
J421	255	0.0	426	74	0.0	418	71
J422	88	0.0	332	106	0.0	324	102
J423	476	0.1	613	59	0.1	601	54
J424	430	0.0	629	86	0.0	618	81
J425	436	0.0	629	84	0.0	618	79
J427	420	0.0	628	90	0.0	617	85
J428	332	0.0	484	66	0.0	512	78
J429	285	0.0	432	64	0.0	430	63
J43	205	1.2	424	95	2.9	416	92
J431	235	2.8	332	42	6.6	324	39
J432	485	0.1	612	55	0.1	598	49
J433	486	4.1	612	55	9.8	598	49
J434	148	2.8	332	80	6.6	324	76
J435	488	4.1	612	54	9.8	598	48
J436	486	4.1	612	55	9.8	598	49
J437	432	1.9	522	39	4.5	509	33
J438	476	4.1	612	59	9.8	598	53
J439	160	0.0	332	75	0.1	324	71
J440	490	0.1	613	53	0.1	599	47
J441	135	0.5	332	85	1.1	324	82
J442	481	0.1	612	57	0.1	598	51
J443	480	0.1	612	57	0.1	598	51
J444	476	0.1	612	59	0.1	598	53

Model		Existing System			Future System		
Node ID	Elevation (ft)	Demand (gpm)	Head (ft)	Pressure (psi)	Demand (gpm)	Head (ft)	Pressure (psi)
J445	140	0.5	332	83	1.1	324	80
J446	151	3.3	332	78	7.8	324	75
J447	160	3.3	332	75	7.8	324	71
J448	466	0.1	612	63	0.1	598	57
J449	180	5.4	332	66	12.7	324	63
J450	132	0.5	332	87	1.1	324	83
J451	472	0.1	612	61	0.1	598	55
J452	490	0.1	612	53	0.1	598	47
J453	145	0.5	332	81	1.1	324	77
J454	431	3.6	612	79	8.6	598	73
J455	416	0.0	522	46	0.0	514	43
J456	416	2.4	613	85	5.7	599	79
J457	130	0.0	332	87	0.0	324	84
J458	424	2.4	613	82	5.7	599	76
J459	415	6.4	522	46	15.2	514	43
J460	138	0.0	332	84	0.0	324	80
J461	416	6.4	522	46	15.2	513	42
J462	130	2.0	332	88	4.7	324	84
J463	406	4.4	522	50	10.4	513	46
J464	375	2.8	522	64	6.6	508	58
J465	412	6.4	522	48	15.2	513	44
J466	158	0.1	332	75	0.1	324	72
J467	414	4.7	522	47	11.2	513	43
J468	173	5.4	332	69	12.7	325	66
J469	375	0.0	522	64	0.0	508	58
J47	486	4.1	612	55	9.8	598	49
J470	417	4.4	522	46	10.5	513	41
J471	146	2.0	332	81	4.7	324	77
J472	414	4.4	522	47	10.4	512	43
J473	89	1.2	332	105	2.9	324	102
J474	412	2.3	522	48	5.5	512	43
J475	104	2.0	332	99	4.7	324	95
J476	410	0.0	522	49	0.0	512	44
J477	82	1.2	332	108	2.9	324	105
J478	386	4.4	522	59	10.4	512	55
J479	112	2.0	332	95	4.7	324	92
J480	396	4.4	522	55	10.4	513	51
J481	468	2.2	618	65	5.3	610	62
J482	401	2.8	522	52	6.6	511	48
J483	137	2.0	332	85	4.8	324	81
J484	405	2.8	522	51	6.6	510	46
J485	469	2.2	618	64	5.3	610	61
J486	405	1.2	522	51	2.9	509	45
J487	465	2.8	612	64	6.6	598	58
J488	123	0.0	332	91	0.1	324	87
J489	220	0.7	422	88	1.7	411	83
J490	473	2.8	612	60	6.6	598	54
J491	140	10.7	332	83	25.3	324	80
J492	405	2.3	522	51	5.4	509	45
J493	172	0.7	332	69	1.7	324	66
J494	67	0.7	332	115	1.7	324	111
J495	294	0.0	484	82	0.0	511	94
J497	406	2.8	522	50	6.6	509	45
J498	400	2.8	522	53	6.6	508	47
J499	436	0.0	629	83	0.0	618	79
J500	427	12.9	522	41	30.4	508	35
J5000	480	0.0	630	65	0.0	617	59
J502	200	0.7	332	57	1.7	325	54
J503	346	2.8	522	76	6.6	508	70
J504	114	8.7	332	94	20.5	324	91
J505	394	2.8	522	55	6.6	511	51
J506	87	0.0	332	106	0.0	324	103
J507	246	2.8	423	77	6.7	414	73

Model		Existing System			Future System		
Node ID	Elevation (ft)	Demand (gpm)	Head (ft)	Pressure (psi)	Demand (gpm)	Head (ft)	Pressure (psi)
J508	383	2.8	522	60	6.6	511	55
J509	377	2.8	522	63	6.6	511	58
J51	490	4.1	612	53	9.8	598	47
J510	84	3.8	332	107	9.0	324	104
J511	108	0.7	332	97	1.7	324	94
J512	334	2.8	522	81	6.6	511	77
J514	258	2.8	423	71	6.6	414	68
J515	299	11.6	522	96	27.5	511	92
J516	282	0.0	426	62	0.0	418	59
J517	332	11.6	522	82	27.5	511	78
J518	294	0.0	432	60	0.0	430	59
J519	370	11.6	522	66	27.5	511	61
J520	470	4.4	612	62	10.4	598	56
J521	320	5.7	522	87	13.5	511	83
J522	461	4.4	612	66	10.4	598	59
J523	77	0.0	332	111	0.0	324	107
J524	406	0.2	625	95	0.5	614	90
J525	273	11.6	424	65	27.5	417	62
J526	461	4.4	612	66	10.4	598	59
J527	296	2.8	426	56	6.6	417	52
J528	462	4.4	612	65	10.4	598	59
J529	308	5.7	522	93	13.5	511	88
J53	150	2.2	332	79	5.3	324	75
J530	460	4.4	612	66	10.4	598	60
J531	288	0.0	432	62	0.0	430	61
J532	265	0.0	424	69	0.0	417	66
J533	370	0.2	484	50	0.5	512	61
J534	455	2.2	624	73	5.3	613	68
J535	240	0.0	426	80	0.0	418	77
J536	445	4.4	612	73	10.4	598	66
J537	274	0.0	432	68	0.0	430	68
J538	455	4.4	612	68	10.4	598	62
J539	332	0.0	422	39	0.0	508	76
J540	466	4.4	612	63	10.4	598	57
J5400	120	3.3	332	92	7.8	324	89
J541	477	4.4	612	59	10.4	598	52
J542	186	0.0	432	107	0.0	426	104
J55	228	2.8	423	85	6.6	415	81
J6000	450	0.0	629	78	0.0	617	72
J6400	144	2.0	332	81	4.7	324	78
J69	468	3.4	612	63	8.0	598	56
J71	441	3.4	612	74	8.0	598	68
J72	413	4.0	619	89	9.4	607	84
J7800	412	0.3	628	94	0.7	617	89
J81	288	2.8	423	59	6.6	415	55
J8600	238	2.8	423	80	6.6	415	77
J900	220	0.0	332	48	0.0	324	45
J-942	157	0.0	332	76	0.0	324	72
J-943	165	0.0	332	72	0.0	324	69
J124	134	n/a	n/a	n/a	0.0	324	82
J1252	364	n/a	n/a	n/a	0.0	508	62
J1254	363	n/a	n/a	n/a	0.0	508	63
J126	132	n/a	n/a	n/a	0.0	324	83
J1266	349	n/a	n/a	n/a	0.0	508	69
J128	128	n/a	n/a	n/a	0.0	324	85
J132	124	n/a	n/a	n/a	0.0	324	87

APPENDIX E

Consistency Statement Checklist

Washington State Department of Health

Local Government Consistency Review Checklist

Water System Name: City of Duvall PWS ID: 207508

Planning/Engineering Document Title: Comp. Water System Plan Plan Date: November 2011

Local Government with Jurisdiction: City of Duvall

WAC 246-290-108 Consistency with local plans and regulations:
Consistency with local plans and regulations applies to planning and engineering documents under WAC 246-290-106, 246-290-107, and 246-290-110(4)(b (ii).

1) Municipal water suppliers must include a consistency review and supporting documentation in its planning or engineering document describing how it has addressed consistency with **local plans and regulations**. This review must include specific elements of local plans and regulations, as they reasonably relate to water service as determined by Department of Health (DOH). Complete the table below and see instructions on back.

Local Government Consistency Statement	Page(s) in Planning Document	Yes – No – Not Applicable
a) The water system service area is consistent with the adopted land use and zoning within the applicable service area.	ES-2	Yes
b) The six-year growth projection used to forecast water demand is consistent with the adopted city/county's population growth projections. If a different growth projection is used, provide an explanation of the alternative growth projection and methodology.	3-4, table 3-1	Yes
c) Applies to cities and towns that provide water service: All water service area policies of the city or town are consistent with the utility service extension ordinances of the city or town.	5-2 to 5-5	Yes
d) Service area policies for new service connections are consistent with the adopted local plans and adopted development regulations of all jurisdictions with authority over the service area [City(ies), County(ies)].	5-2 to 5-5 fig. 2-3	Yes
e) Other relevant elements related to water supply are addressed in the water system plan, if applicable; Coordinated Water System plans, Regional Wastewater plans, Reclaimed Water plans, Groundwater Area Management plans, and Capital Facilities Element of Comprehensive plans.	Varies	Yes

I certify that the above statements are true to the best of my knowledge and that these specific elements are consistent with adopted local plans and development regulations.

Lara Thomas 11/2/11

Signature Date

Lara Thomas, Planning Manager, City of Duvall

Printed Name, Title, & Jurisdiction

Consistency Review Guidance

For Use by Local Governments and Municipal Water Suppliers

This checklist may be used to meet the requirements of WAC 246-290-108. When using an alternative format, it must describe all of the elements; 1a), b), c), d), and e), when they apply.

For **water system plans (WSP)**, a consistency review is required for the retail service area and any additional areas where a municipal water supplier wants to expand its water right's place of use.

For **small water system management programs**, a consistency review is only required for areas where a municipal water supplier wants to expand its water right's place of use. If no water right place of use expansion is requested, a consistency review is not required.

For **engineering documents**, a consistency review is required for areas where a municipal water supplier wants to expand its water right's place of use (water system plan amendment is required). For non-community water systems, a consistency review is required when requesting a place of use expansion. All engineering documents must be submitted with a service area map per WAC 246-290-110(4)(b)(ii).

A) Documenting Consistency: Municipal water suppliers must document all of the elements in a consistency review per WAC 246-290-108.

1 a) Provide a copy of the adopted **land use/zoning** map corresponding to the service area. The uses provided in the WSP should be consistent with the adopted land use/zoning map. Include any other portions of comprehensive plans or development regulations that are related to water supply planning.

1 b) Include a copy of the **six-year growth projections** that corresponds to the service area. If the local population growth rate projections are not used, provide a detailed explanation on why the chosen projections more accurately describe the expected growth rate. Explain how it is consistent with the adopted land use.

1c) Include water service area policies and show that they are consistent with the **utility service extension ordinances** within the city or town boundaries. This applies to cities and towns only.

1 d) Include all **service area policies** for how new water service will be provided to new customers.

1 e) **Other relevant elements** related to water supply planning as determined by the department (DOH). See Local Government Consistency – Other Relevant Elements, Policy B.07, September 2009.

B) Documenting an Inconsistency: Please document the inconsistency, include the citation from the comprehensive plan or development regulation, and provide direction on how this inconsistency can be resolved.

C) Documenting Lack of Consistency Review by Local Government: Where the local government with jurisdiction did not provide a consistency review, document efforts made and the amount of time provided to the local government for their review. Please include: name of contact, date, and efforts made (letters, phone calls, and e-mails). In order to self-certify, please contact the DOH Planner.

The Department of Health is an equal opportunity agency. For persons with disabilities, this document is available on request in other formats. To submit a request, please call 1-800-525-0127 (TTY 1-800-833-6388).

APPENDIX F

SEPA Checklist

CITY OF DUVALL
Planning Department
Determination of Non-Significance
2011 Comprehensive Water System Plan Update
PW11-001
August 30, 2011

PROJECT NAME / DESCRIPTION OF PROPOSAL

The 2011 Comprehensive Water System Plan update presents a description of the existing water system and service area, forecast of future water demands, policies and design criteria for water system operation and improvements, water system analyses, the operations and maintenance program, a schedule of improvements, and a financial plan to accomplish the improvements.

APPLICANT/CONTACT

Shaun Tozer (425) 788-3434
City of Duvall
P.O. Box 1300
Duvall, WA 98019

LEAD AGENCY

Lead Agency: City of Duvall, PO Box 1300, Duvall, WA 98019

The responsible official hereby makes the following determination based upon impacts identified in the environmental checklist and evaluated by staff, the policies set out in the 2006 City of Duvall Comprehensive Plan, and other municipal policies, plans, rules and regulations designated as a basis for the exercise of substantive authority of the Washington State Environmental Policy Act Rules pursuant to RCW 43.21C.

It is hereby determined that this proposal does not have a probable significant adverse impact on the environment. An Environmental Impact Statement (EIS) is not required under RCW 43.21C.031(1). This DNS is issued under WAC 197-11-340; the lead agency will not act on this proposal for at least 14 days from August 30, 2011.

DESCRIPTION OF ACTION AND IMPACTS

Action: The action of the City of Duvall Comprehensive Water System Plan is to identify and schedule water system improvements that correct existing system deficiencies and provide a safe and reliable supply of water to current and future customers.

COMMENT PERIOD

Comments regarding the DNS must be submitted no later than **4:30 p.m. on Wednesday, September 13, 2011.** Appeals shall be filed in accordance with DMC 14.08.060.C.

RESPONSIBLE OFFICIAL

Lara Thomas, Planning Manager
PO Box 1300, Duvall, WA 98019, (425) 788-1156

Lara D Thomas
Lara Thomas, Planning Manager

8/30/11
Date

Received Stamp	City of Duvall Small Town. Real Life.	Planning Department 15535 Main St. NE PO Box 1300 Duvall, WA 98019 (425) 788-2779 FAX (425) 788-8097 www.duvallwa.gov

SEPA Environmental Checklist

TO BE COMPLETED BY APPLICANT

APPLICANT

Name (please print): **City of Duvall, c/o Shaun Tozer** Email Address: **shaun.tozer@duvallwa.gov**		Phone # **(425) 788-3434**	
Street Address: **14525 Main Street NE**	City: **Duvall**	State: **WA**	Zip: **98019**

OWNER (if other than applicant)

Name (please print): Email Address:		Phone #: ( )	
Street Address:	City:	State:	Zip:

BASIC PROJECT INFORMATION

Project / Development Name: **2010-2017 Comprehensive Water System Plan**	Project / Development Location (including nearest intersections): **Citywide, City of Duvall**

Assessor / Tax Parcel Numbers (include 10-digit parcel number for all parcels within project boundaries):

City wide		

Land Area of Project Site (sq. ft. & acres): **2.5 square miles (city wide)**

Present use of property: **Residential, Commercial, and Public uses**

Date checklist prepared: **July 15, 2011**	Agency requesting checklist: **Planning Department**

List all permits for this project from local, state, federal, or other agencies for which you have applied or will apply.

AGENCY	PERMIT TYPE	SUBMITTED	*NUMBER	STATUS**
Non-project application, no permits required				

*LEAVE BLANK IF NOT SUBMITTED

**APPROVED, DENIED, OR PENDING

1. Proposed timing or schedule (including phasing and construction dates, if applicable):

   Non-project planning action, projects within the CIP may be constructed in the 2011-2017 time frame.

2. Do you have any plans for future additions, expansion, or further activity related to or connected with this proposal. If yes, explain

   The amendment is part of the six year comprehensive plan update. The next change will take place in 2017.

3. List any environmental information you know about that has been prepared, or will be prepared, directly related to this proposal.

   None known as part of this non-project planning action. Individual evaluations and permits will be completed prior to any construction activity.

4. Do you know whether applications are pending for governmental approvals of other proposals directly affecting the property covered by your proposal? If yes, explain.

   None known as part of this non-project planning action. Individual evaluations and permits will be completed prior to any construction activity.

5. Give a brief, complete description of your proposal, including the proposed uses and the size of the project and site. There are several questions later in this checklist that ask you to describe certain aspects of your proposal. You do not need to repeat those answers on this page. (Lead agencies may modify this form to include additional specific information on project description.)

   The purpose of the update is to: evaluate historical growth and water usage for use in projecting future water demands; inventory, describe and analyze the existing water system to determine if it meets minimum requirements mandated by DOH and the City's own policies and design criteria; prepare a capital improvement program (CIP) that identifies water system improvements which resolve existing system deficiencies and accommodate future needs of the system for at least 20 years into the future, prepare an implementation schedule of improvements and financing plan that meets the goals of the financial program; review and update the water conservation program, water quality program, cross-connection program, and wellhead protection program; document the operations and maintenance program and comply with all other water system plan requirements of DOH.

6. Location of the proposal. Give sufficient information for a person to understand the precise location of your proposed project, including a street address, if any, and section, township and range if known. If a proposal would occur over a range of area, provide the range or boundaries of the sites(s). Provide a legal description, site plan, vicinity map and topographic map, if reasonably available. While you should submit any plans required by the agency, you are not required to duplicate maps or detailed plans submitted with any permit applications related to this checklist.

Tax identification number: **City wide**

Site address: **City Wide**

Located at: **City Wide**

See vicinity map and plans: **Attached**

TO BE COMPLETED BY APPLICANT	EVALUATION FOR AGENCY USE ONLY
1. EARTH	
A. General description of the site (circle one): flat, rolling, hilly, steep slopes, mountainous, other _____. Describe location and areas on the site that have different topography.	
The City of Duvall is located on the east slope of the Snoqualmie River Valley and generally slopes down to the west from an upland plateau situated at approximate Elevation 500 feet to the Snoqualmie River at approximate Elevation 30 feet.	
B. What is the steepest slope on the site (approximate percent slope)? Describe location and areas of different topography.	
Slopes vary within the City but generally do not exceed 20% in any of the proposed project areas	
C. What general types of soils are found on the site (for example, clay, sand, gravel, peat, mulch)? If you know the classification of agricultural specify them and note any prime farmland.	
Topsoil, weathered glacial soils, and glacially consolidated till and outwash are generally present within the City. No agricultural lands or farmlands are present within the proposed project areas.	
D. Are there surface indications or history of unstable soils in the immediate vicinity? If so, describe.	
None known as part of this non-project planning action. Individual evaluations and permits will be completed prior to any construction activity.	
E. Describe the purpose, type, location and approximate quantities of any filling or grading proposed. Indicate source of fill.	
Project quantities will vary greatly. Individual project evaluations and permits will be completed prior to any construction activity.	

F. Could erosion occur as a result of clearing, construction, or use. If so, generally describe.

None known as part of this non-project planning action. Best management practices will be used during construction to minimize the potential for erosion.

G. About what percentage of the site will be covered with impervious surfaces after project construction (for example, asphalt or building)?

This is a non-project action. Individual project evaluations and permits will be completed prior to any construction activity.

H. Proposed measures to reduce or control erosion, or other impacts to the earth, if any.

Protective measures will be developed for each project. Individual project evaluations and permits will be completed prior to any construction activity.

TO BE COMPLETED BY APPLICANT	EVALUATION FOR AGENCY USE ONLY

2. AIR

A. What type of emissions to the air would result from the proposal (i.e. dust, automobile, odors, industrial wood smoke) during construction and when the project is completed? If any, generally describe and give approximate quantities if known.

None known as part of this non-project planning action. Projects proposed in the plan typically involve emissions emitted from equipment during construction.

B. Are there any off-site sources of emission or odor that may affect your proposal? If so, generally describe.

None located within city limits or the surrounding area.

C. Proposed measures to reduce or control emissions or other impact to air, if any.

None proposed as part of this non-project planning action. Best management practices will be used to reduce any dust generated during construction.

3. WATER

A. Surface

1. Is there any surface water body on or in the immediate vicinity of the site (including year-round and seasonal streams, saltwater, lakes, ponds, wetlands)? If yes, describe type, location and provide names. If appropriate, state what stream or river it flows into. Provide a sketch if not shown on site plans.

None known as part of this non-project planning action. Individual evaluations and permits will be completed prior to any construction activity.

2. Will the project require any work over, in, or adjacent to (within 200 feet) the described waters? If yes, please describe and attach available plans. Note approximate distance between surface of waters and any construction, fill, etc.

A list of the proposed projects is defined in Chapter Nine of the Plan. Individual evaluations and permits will be completed prior to any construction activity.

3. Estimate the amount of fill and dredge material that would be placed in or removed from surface water or wetlands and indicate the area of the site that would be affected. Indicate the source of fill material, if from on site.

None known as part of this non-project planning action. Individual evaluations and permits will be completed prior to any construction activity.

TO BE COMPLETED BY APPLICANT	EVALUATION FOR AGENCY USE ONLY
4. Will the proposal require surface water withdrawals or diversions. Give general description, purpose and approximate quantities if known. **None known as part of this non-project planning action. Individual evaluations and permits will be completed prior to any construction activity.** 5. Does the proposal lie within a 100-year floodplain? If so, note the location on the site plan. **None known as part of this non-project planning action. Individual evaluations and permits will be completed prior to any construction activity.** 6. Does the proposal involve any discharge of waste material to surface waters? If so, describe the type of waste and anticipated volume of discharge. **None of proposed projects discharge of waste material to surface waters**	

B. Ground

1. Will ground water be withdrawn, or will water be discharged to ground water? Give general description, purpose, and approximate quantities if known.

None of the proposed projects withdraw of discharge to ground water

2. Describe waste material that will be discharged into the ground from septic tanks or other sources, if any (for example: Domestic sewage; industrial chemicals; agricultural; etc.) Describe the general size of the system, the number of such systems, the number of houses to be served (if applicable), or the number of animals or humans the system(s) are expected to serve.

None of the proposed projects discharge waist material into the ground.

C. Water Runoff (including storm water).

1. Describe the source of runoff (including storm water) and method of collection and disposal, if any (include quantities, if known). Where will this water flow? Will this water flow into other waters? If so, describe.

This non-project planning action. Individual evaluations and permits will be completed prior to any construction activity.

2. Could waste materials enter ground or surface waters? If so, describe.

The Plan does not anticipate waste materials entering ground or surface waters. Individual evaluations and permits will be completed prior to any construction activity.

D. Proposed measures to reduce or control surface, ground, and drain off water impacts, if any:

This non-project planning action. Individual evaluations and permits will be completed prior to any construction activity.

TO BE COMPLETED BY APPLICANT	EVALUATION FOR AGENCY USE ONLY

4. PLANTS

A. Check or circle types of vegetation found on the site: **N/A**

- ☒ deciduous tree: alder, maple, aspen, other
- ☒ evergreen tree: fir, cedar, pine, other
- ☒ shrubs
- ☒ grass
- ☒ pasture
- ☐ crop or grain
- ☐ wet soils plants: cattail, butter cup, bulrush, skunk cabbage, other
- ☐ water plants: water lily, eelgrass, milfoil, other
- ☐ other types of vegetation

B. What kind and amount of vegetation will be removed or altered?

Project quantities will vary greatly. Individual project evaluations and permits will be completed prior to any construction activity.

C. List threatened or endangered species known to be on or near the site.

None known as part of this non-project planning action. Individual evaluations and permits will be completed prior to any construction activity.

D. Proposed landscaping, use of native plants or other measures to preserve or enhance vegetation on the site, if any:

Duvall Municipal Code requires use of native plants for landscaping.

5. ANIMALS

A. Check any birds and animals which have been observed on or near the site or are known to be on or near the site: **N/A**

Birds:

☒ hawk ☐ heron ☐ eagle ☒ songbirds
☐ other:

Mammals:

☒ deer ☐ bear ☐ elk ☐ beaver
☒ rodents ☒ coyotes ☐ other

B. List any threatened or endangered species known to be on or near the site.

Chinook Salmon are present in Coe Clemons, Thayer Creek and the Snoqualmie River. If projects located in these areas will require additional environmental studies.

C. Is the site part of a migration route? If so, explain.

Yes, the City of Duvall is located along the Pacific Flyway

D. Proposed measures to preserve or enhance wildlife, if any.

This non-project planning action. Individual evaluations and permits will be completed prior to any construction activity.

TO BE COMPLETED BY APPLICANT

EVALUATION FOR AGENCY USE ONLY

6. ENERGY AND NATURAL RESOURCES

A. What kinds of energy (electric, natural gas, oil, wood, stove, solar) will be used to meet the completed project's energy needs? Describe whether it will be used for heating, manufacturing, etc.

None know

B. Would your project affect the potential use of solar energy by adjacent properties? If so, generally describe.

No

C. What kinds of energy conservation features are included in the plans on this proposal? List other proposed measures to reduce or control energy impacts, if any.

None proposed

7. ENVIRONMENTAL HEALTH

A. Are there any environmental health hazards, including exposure to toxic chemicals, risk or fire and explosion, spill, or hazardous waste, that could occur as a result of this proposal? If so, describe.

None known as part of this non-project planning action. Individual evaluations and permits will be completed prior to any construction activity.

1. Describe special emergency services that might be required.

None known as part of this non-project planning action. Individual evaluations and permits will be completed prior to any construction activity.

2. Proposed measures to reduce or control environmental health hazards, if any.

None proposed as part of this non-project planning action. Individual evaluations and permits will be completed prior to any construction activity.

B. Noise

1. What type of noise exists in the area which may affect your project (i.e. traffic, equipment, operation, other)?

None known

2. What types and levels of noise would be created by or associated with the project on a short-term or a long-term basis (for example: traffic, construction, operation, other)? Indicate what hours noise would come from the site.

Noise typically associated with a construction project

3. Proposed measures to reduce or control noise impacts, if any.

Hours of construction are regulated to reduce impacts of nearby residence and business.

TO BE COMPLETED BY APPLICANT	EVALUATION FOR AGENCY USE ONLY

8. LAND AND SHORELINE USE

A. What is the current use of the site and adjacent properties?

Nearby land use will vary by project. Almost all roadway projects are located in existing ROW. **Individual project evaluations and permits will be completed prior to any construction activity.**

B. Has the site been used for agriculture? If so, describe.

No recent agricultural activity.

C. Describe any structures on the site.

None proposed.

D. Will any structures be demolished? If so, what?

Nothing proposed.

E. What is the current zoning classification of the site?

Right-of-ways are not zoned.

F. What is the current comprehensive plan designation of the site?

ROW's do not have comprehensive plan designation.

G. If applicable, what is the current shoreline master program designation of the site?

None known as part of this non-project planning action. Individual evaluations and permits will be completed prior to any construction activity.

H. Has any part of the site been classified as an "environmentally sensitive area? If so, specify. (If unsure, check with the City.)

None known as part of this non-project planning action. Individual evaluations and permits will be completed prior to any construction activity.

Approximately how many people would reside or work in the completed project?

None

J. Approximately how many people would the completed project displace?

None

K. Proposed measures to avoid or reduce displacement impacts, if any:

N/A

L. Proposed measures to ensure the proposal is compatible with existing and projected land use and plans, if any.

The Water System Plan is coordinated with the land use element of the city's comprehensive plan.

TO BE COMPLETED BY APPLICANT	EVALUATION FOR AGENCY USE ONLY

9. <u>HOUSING</u>

A. Approximately how many units would be provided, if any? Indicate whether high, middle, or low income housing.

None

B. Approximately how many units, if any, would be eliminated? Indicate whether high, middle, or low income housing. **None** C. Proposed measures to reduce or control housing impacts, if any. **N/A**	
10. <u>AESTHETICS</u> A. What is the tallest height of any proposed structure(s), not including antennas; what is the principal exterior building material(s) proposed? **None, all waterlines are underground.** B. What views in the immediate vicinity would be altered or obstructed? **None** C. Proposed measures to reduce or control aesthetic impacts, if any. **None**	
11. <u>LIGHT AND GLARE</u> A. What type of light or glare will the proposal produce? What time of day or night would it mainly occur? **None** B. Could light or glare from the finished project be a safety hazard or interfere with views? **No lighting is proposed.** C. What existing off-site sources of light or glare may affect your proposal? **None** D. Proposed measures to reduce or control light and glare impacts, if any. **None**	
12. <u>RECREATION</u> A. What designated and information recreational opportunities are in the immediate vicinity? **None of the proposed projects will cause land term impact to recreational opportunities.**	
TO BE COMPLETED BY APPLICANT	**EVALUATION FOR AGENCY USE ONLY**

B. Would the proposed project displace any existing recreational uses? If so, describe?

No

C. Proposed measures to reduce or control impacts on recreation including recreation opportunities to be provided by the project or applicant, if any.

None

13. HISTORICAL AND CULTURAL PRESERVATION

A. Are there any places or objects listed on, or proposed for national, state or local preservation registers known to be on or next to the site? If so, generally describe.

None known as part of this non-project planning action. Individual evaluations and permits will be completed prior to any construction activity.

B. Generally describe any landmarks or evidence of historic, archaeological, scientific, or cultural importance known to be on or next to the site.

None known as part of this non-project planning action. Individual evaluations and permits will be completed prior to any construction activity.

C. Proposed measures to reduce or control impacts, if any.
The proposed projects will not impact historical or cultural sites

14. TRANSPORTATION

A. Identify public streets and highways serving the site and describe proposed access to the existing street system. Show on site plans, if any.

Streets and highways vary by project. Individual evaluations will be completed prior to any construction activity.

B. Is site currently served by public transit? If not, what is the approximate distance to the nearest transit stop?

N/A

C. How many parking spaces would the completed project have? How many would the project eliminate?

None

D. Will the proposal require any new roads or streets or improvements to existing roads or streets, not including driveways? If so, generally describe (indicate whether public or private).

Improvements will be necessary for some of the proposed projects as involves removing roadways to install waterlines. Individual evaluations will be completed prior to any construction activity.

TO BE COMPLETED BY APPLICANT	EVALUATION FOR AGENCY USE ONLY
E. Will the project use (or occur in the immediate vicinity of) water, rail or air transportation? If so, generally describe. **No** F. How many weekday vehicular trips (one way) per day would be generated by the completed project? Not known If known, indicate when peak volumes would occur. 0 a.m. & 0 p.m. How many of these trips occur in the a.m. peak hours? 0 How many of these trips occur in the p.m. peak hours? 0 G. Proposed measures to reduce or control transportation impacts, if any. **N/A**	
15. PUBLIC SERVICES A. Would the project result in an increased need for public services (for example: fire protection, police protection, health care, schools, other)? If so, generally describe. **The proposed projects respond to an increased need for public service** B. Proposed measures to reduce or control direct impacts on public services. If any. **N/A**	
16. UTILITIES A. Check utilities currently available at the site: ☐ electricity ☐ natural gas ☐ refuse service ☐ water ☐ telephone ☐ sanitary sewer ☐ septic system ☐ other B. Describe the utilities that are proposed for the project, the utility providing the service, the general construction activities on the site or in the immediate vicinity which might be needed. **Varies by location. Individual evaluations and permits will be completed prior to any construction activity.**	
17. SIGNATURE *The above answers are true and complete to the best of my knowledge. I understand that the lead agency is relying on them to make its decision.* Applicant Signature: _____ Date Submitted: **July 20, 2011** Relationship of signer to project? **Project Manager**	
TO BE COMPLETED BY APPLICANT **18. SUPPLEMENTAL SHEET FOR NON-PROJECT ACTIONS** *(DO NOT USE THIS SHEET FOR PROJECT ACTIONS)*	**EVALUATION FOR AGENCY USE ONLY**

Because these questions are very general, it may be helpful to read them in conjunction with the list of the elements of the environment.

When answering these questions, be aware of the extent the proposal the types of activities likely to result from the proposal, would affect the item at a greater intensity or at a faster rate than if the proposal were not implemented. Respond briefly and in general terms.

a. How would the proposal be likely to increase discharge to water; emissions to air; production, storage, or release of toxic or hazardous substances; or production of noise:

Air and noise pollution may occur during construction of individual projects.

Proposed measures to avoid or reduce such increases are:

Individual projects within the proposal will be evaluated with respect to discharge or emissions at the planning and permitting stage and any or all impacts will be avoided or mitigated.

b. How would the proposal be likely to affect plants, animals, fish, or marine life?

The majority of the improvements will be done in existing developed ROW. Individual projects within the proposal will be evaluated with respect to plant and animal at the planning and permitting stage and any or all impacts will be avoided or mitigated.

Proposed measures to protect or conserve plants, animals, fish or marine life are:

Individual projects within the proposal will be evaluated with respect to plant and animal at the planning and permitting stage and any or all impacts will be avoided or mitigated.

c. How would the proposal be likely to deplete energy or natural resources?

Individual projects within the proposal will be evaluated with respect to resource depletion at the planning and permitting stage and any or all impacts will be avoided or mitigated.

d. Proposed measures to protect or conserve energy and natural resources are:

The city encourages water conservation thought the distribution of low-flow showerheads and faucet fittings, as well as leak detection kits, and public information resources.

e. How would the proposal be likely to use or affect environmentally sensitive areas or areas designated (or eligible or under study) for governmental protection; such as parks, wilderness, wild and scenic rivers, threatened or endangered species habitat, historic or cultural sites, wetlands, floodplains, or prime farmlands:

The proposal is a non-project planning action and will not have any environmental impacts. Individual projects within the proposal will be evaluated with respect to environmental impacts at the planning and permitting stage and any or all impacts will be avoided or mitigated.

Proposed measures to protect such resources or to avoid or reduce impacts are:

The projects taking place in the vicinity of a sensitive area will require additional environmental evaluation (SEPA) and will be required to comply with the city's sensitive area code.

f. How would the proposal be likely to affect land and shoreline use, including whether it would allow or encourage land or shoreline uses incompatible with existing plans?

The Plan will not encourage incompatible uses. The plan is compatible with the city's land use element of the Comprehensive Plan and Duvall Municipal Code.

TO BE COMPLETED BY APPLICANT	EVALUATION FOR AGENCY USE ONLY
Proposed measures to avoid or reduce shoreline and land use impacts are: **The proposal is a non-project planning action and will not have any shoreline and land use impacts. Individual projects within the proposal will be evaluated with respect to shoreline and land use impacts at the planning and permitting stage and any or all impacts will be avoided or mitigated.** g. How would the proposal be likely to increase on transportation or public services and utilities? **The Plan responses to an increased need for municipal water service in new annexed areas or replacement of existing lines. Individual projects within the proposal will be evaluated with respect to transportation, public service, or utility impacts at the planning and permitting stage and any or all impacts will be avoided or mitigated.** Proposed measures to reduce or respond to such demand(s) are: **See above**	

h. Identify, if possible, whether the proposal may conflict with local, state, or federal laws or requirements for the protection of the environment. **The proposal is a requirement of state law.**	

APPENDIX G

Water Use Efficiency Program

CITY OF DUVALL

Water Use Efficiency Program

INTRODUCTION

The City of Duvall recognizes that water is a valuable and essential natural resource that needs to be used wisely. This Water Use Efficiency Program provides an approach to increase water use efficiency within the City's water service area.

BACKGROUND

Water Use Efficiency Requirements

In the past, water systems in Washington State developed programs to improve the efficient use of water under a document titled "The Conservation Planning Requirements", which was published by the Department of Ecology (Ecology) and the Department of Health (DOH) in March 1994. The 2007 Water Use Efficiency (WUE) Rule, which came out of the 2003 Municipal Water Law, identified additional requirements for municipal water systems. The planning requirements for water use efficiency programs include (1) data collection and reporting, (2) demand forecasting, (3) evaluation and selection of water use efficiency measures, (4) evaluation of water rates, and (5) evaluation of water reclamation opportunities. In addition to these planning requirements, the WUE Rule requires municipal water systems to establish water saving goals through a public process, meet a distribution system leakage standard, and report annually on the progress of meeting goals and using water efficiently.

Regional Water Use Efficiency Planning

There are two primary groups promoting water use efficiency on a regional basis in King County - the Saving Water Partnership and the Partnership for Water Conservation. The Saving Water Partnership is administered by Seattle Public Utilities (SPU) and is comprised of the City of Duvall and other local utilities that purchase wholesale water from SPU. The Saving Water Partnership encourages customers to conserve water through public education materials and programs, and by using resource efficient appliances, fixtures and equipment. The Saving Water Partnership also conducts evaluations of their programs to ensure that they are meeting their water use efficiency goals. The Partnership for Water Conservation includes members from the greater Puget Sound area, including businesses and environmental groups, cities, water districts, regional water associations, the Saving Water Partnership, and others.

WATER USE EFFICIENCY PROGRAM

The planning requirements for water use efficiency programs, as described earlier, are (1) data collection and reporting, (2) demand forecasting, (3) evaluation and selection of water use efficiency measures, (4) evaluation of water rates, and (5) evaluation of water reclamation opportunities. Water use data and system-wide demand forecasts are contained in **Chapter 4** of the City of Duvall's Comprehensive Water System Plan. The City is committed to continue collecting water use data beyond the data presented in **Chapter 4** for evaluation of its water use efficiency program and water use patterns, and for forecasting demands for future facility requirements. The City's water use efficiency program that follows includes a description of previous program efforts, a statement of its goals and objectives, and the selection and evaluation of water use efficiency measures.

Previous Water Use Efficiency Efforts

Most water use efficiency efforts in Duvall are currently implemented at the regional level by the Saving Water Partnership. The regional 1% Program, which was in effect from 2000-2010, set forth a goal of reducing total water consumption by one percent per year, and since the commencement of the program in 2000, the region has exceeded these goals. The Saving Water Partnership publishes an annual report that monitors the performance of past conservation efforts to ensure the program is meeting its goals and is being managed efficiently. The annual reports are available at http://www.savingwater.org/education_reports.htm. The Saving Water Partnership's programs such as past plumbing and fixture rebates, landscaping audits, outreach and technical assistance, and water use efficiency marketing continue to help the region achieve significant water savings consistent with its goals and will therefore continue to be supported.

Water Use Efficiency Program Goals and Objectives

The goals and objectives of the City of Duvall Water Use Efficiency Program consist of:

- Achieving system-wide average water use reduction of one percent per year through the year 2014, (Council Resolution 08-06).
- Continue to increase awareness among all water users of the value and importance of conserving water and of the methods available to achieve reductions in water use.
- Continue to evaluate potential uses of reclaimed water from the City's Wastewater Treatment Plant for irrigation or other non-potable applications.

The 2007-2012 Water Use Efficiency Goal adopted through SPU's 2007 Water System Plan for the Saving Water Partnership consists of the last four years of the 2000-2010 regional 1% Program and

the first two years of the 2011-2030 Regional Conservation Program, which may include public education to promote behavioral changes, customer incentives for installing water-efficient equipment, and price induced water savings from rates as detailed in the 2007 WSP. The 2013-2018 WUE Goal for SPU and for adoption by members of the Partnership will be determined in SPU's upcoming 2013 WSP.

The City of Duvall will achieve these goals and objectives through the implementation of the water use efficiency program that follows.

Evaluation and Selection of Alternative Measures

The City's evaluation of water use efficiency measures and selected levels of implementation are presented below.

TABLE: SUMMARY OF WATER USE EFFICIENCY PROGRAM MEASURES

PUBLIC EDUCATION PROGRAM MEASURE	EVALUATION
School Outreach - This water use efficiency measure is only required for large systems. This measure requires educational programs that increase awareness of local water resources and encourage water use efficiency.	*This measure is currently accomplished through the Saving Water Partnership; therefore, the City will not duplicate this effort. Because resources to accomplish this water use efficiency measure are allocated at the regional level, rather than directly from Duvall, this measure is highly cost-effective for the City.*
Speakers Bureau - This water use efficiency measure is only required for large water systems and is described in the *Conservation Planning Requirements* as "Seeking speaking opportunities and making speakers available to a wide cross-section of services, community, and other groups."	*The City will encourage and make information available about upcoming water use efficiency speakers or meetings to City customers. At any time, as resources allow, the City will strive to schedule speakers or have City staff speak to residents regarding water use efficiency measures and benefits.*
Program Promotion - This item is a required element of all water use efficiency programs. The *Conservation Planning Requirements* provides the following definition for this measure: "Publicize the need for water conservation through television and radio public service announcements, news articles, public water systems' bill inserts, or other means. This includes promoting efficient indoor and outdoor water usage, distribution of Ecology/Health water use efficiency brochures of other printed material, informing customers, builders and contractors of new plumbing code regulations requiring efficient plumbing fixtures, and other efforts."	*The City will continue to support the regional water use efficiency promotion activities of the Saving Water Partnership. Water use efficiency information can also be accessed by Duvall customers via informational material created by the Saving Water Partnership. This includes newspaper articles, radio and television public service announcements, informational websites, displays at local fairs and mall shows, water-related conferences and seminars, community presentations, quarterly newsletters, water use efficiency education courses for children, and various water use efficiency programs for the elementary, middle, and high schools. The City will also provide water use efficiency brochures in water bills to further increase the promotion of water use efficiency programs.*
Theme Shows and Fairs – The evaluation of this measure is not required for Duvall, because the *Conservation Planning Requirements* lists it as a recommended measure for large and regional systems only. This measure requires that a portable display be made, along with educational materials to be exhibited at local fairs and theme shows.	*This measure has been accomplished by the Saving Water Partnership in the past. Therefore, the City will not duplicate this effort. Because resources to accomplish this water use efficiency measure are allocated at the regional level, rather than directly from Duvall, this measure is highly cost-effective for the City.*

TECHNICAL ASSISTANCE	
PROGRAM MEASURE	**EVALUATION**
Purveyor Assistance - This item is required for medium water systems such as Duvall and is described in the *Conservation Planning Requirements* as "assistance from wholesale suppliers to aide wholesale customers in developing and implementing conservation programs tailored to their needs, and in carrying out the wholesale suppliers conservation program."	*This measure will not be included in the City's water use efficiency program at this time, because the City currently does not have any wholesale customers. However, as a wholesale water purchaser, the City will continue to comply with SPU water use efficiency requirements.*
Customer Assistance - This water use efficiency measure is required for medium water systems such as Duvall. The *Conservation Planning Requirements* defines this water use efficiency measure as the utility providing "assistance and information to customers which facilitates water conservation." A great deal of the information on water use efficiency will be disseminated to customers in the distributed brochures, radio advertisements, and newspaper articles described above under "Program Promotion".	*The City will distribute water use efficiency information at the local level and coordinate with the Saving Water Partnership, as needed, on regional activities. The cost of this program and its predicted water savings are included in the program promotion measure section.*
Technical Studies - This water use efficiency measure is only required for large water systems and requires that "Studies would be designed and conducted by the public water system and/or regional organization."	*The City will utilize studies conducted by the Saving Water Partnership and larger water systems such as SPU. These studies will be used to evaluate the latest water use efficiency techniques applicable to the City's water system and how they can best be implemented. Because resources to accomplish this water use efficiency measure are allocated at the regional level, rather than directly from Duvall, this measure is highly cost-effective for the City.*
Bill Showing Consumption History - This water use efficiency measure is required for medium water systems such as Duvall. According to the *Conservation Planning Requirements*, water billings should display a comparison of current water use with past water use from the same period of the previous year, and show a percent increase or decrease.	*The City began providing this data to its customers on both electronic and paper bills beginning in 2007. Customers logging on to electronic billing can look at their consumption over various years and compare all of them at once. Additional resources outside of the meter reading and billing system upgrade project will not be necessary to implement this water use efficiency measure; therefore, this is a cost-effective measure for the City.*
SYSTEM MEASURES	
PROGRAM MEASURE	**EVALUATION**
Source Meters - Metering of all sources is required for all new or expanding public water systems needing additional water rights. Periodic meter testing and meter repair program is also required under this measure.	*Both of the City's supply sources are currently equipped with meters and are recorded continuously by SPU and the City. The meters are periodically tested and repaired, or replaced, as necessary. While the City does not expect to receive any additional water savings from the program, the maintenance of source meters is vital to sustain current water use efficiency levels, for accurate unaccounted-for water calculations, to ensure accurate billing from SPU, and to maintain proper operation of the water system during SPU's demand metering periods.*
Service Meters - The *Conservation Planning Requirements* recommends that all utilities install individual service meters for all water users and maintain a periodic meter testing and repair program.	*All of the City's service connections are metered. As part of improvements that include the meter reading and billing system upgrade, all residential meters were replaced between 2006-2008 and commercial meters were replaced or upgraded in 2007 The City currently maintains a program in which meters are periodically tested and repaired or replaced, as necessary. While the City does not expect to receive any additional water savings from the program, the maintenance of service meters is vital to sustain current water use efficiency levels, for accurate unaccounted-for water calculations, and*

	to ensure accurate customer billing.
Distribution System Leakage - This water use efficiency measure is required for all public water systems. Starting with data collected in 2007, distribution leakage must not be more than 10 percent of supply, based on a 3-year rolling average. If the City is not able to meet this requirement in the future, a water loss control action plan must be prepared and implemented. This plan will need to identify steps and timelines for reducing leakage.	*The City will continue its water main replacement program to reduce the amount of older and potentially leaking water mains. The City will also require the metering of all non-revenue unaccounted-for water usage such as water main flushing and street cleaning. Although the City is not experiencing distribution system leakage in excess of 10 percent, the City will implement a comprehensive leak detection/water main repair program to further reduce the amount of unaccounted-for water. With an expected total water reduction of 1 percent by 2014, it is anticipated that the City can achieve an average annual water savings of approximately 1.3 million gallons per year making this a cost-effective measure for the City to implement.*
INCENTIVES/OTHER MEASURES	
PROGRAM MEASURE	**EVALUATION**
Single-Family/Multi-Family Kits - This water use efficiency measure is required for medium-sized water systems. The *Conservation Planning Requirements* defines this measure as the following: "Distribute kits containing easily installed water saving devices to single-family residential homes and the owners and managers of apartment buildings and condominiums." These kits could include shower flow restrictors, toilet tank water displacement bags, leak detection dye tablets for toilets, and informational brochures.	*The City receives and makes available water use efficiency kits for all water system customers. The City will support and promote other regional plumbing retrofit programs and will also enforce the use of low-flow plumbing fixtures through the building permit process.*
Nurseries/Agriculture - This item is also required for medium-sized water systems such as Duvall. The *Conservation Planning Requirements* defines this measure as the following: "Encourage and/or require the application of current technology to water use practices of large agriculture/irrigation operations. Examples include nurseries and commercial agriculture."	*The City will encourage agricultural landowners and large irrigation operations to utilize the latest technology available to help conserve water.*
Landscape Management/Playfields - Xeriscaping - This water use efficiency measure is required for medium-sized water systems. The *Conservation Planning Requirements* defines this measure as the following: "Promote low water demand landscaping in all retail customer classes (private, public, commercial, industrial, etc.)." The promotion of low water demand landscaping can be accomplished by (1) preparing a demonstration garden which can provide an example of this type of landscaping to interested customers and developers, (2) working with local nurseries to promote the availability of low water demand plants and/or (3) developing codes that require landscaping on new development that is of the low demand type. The Saving Water Partnership works with the landscape industry to promote water use efficiency practices within the industry and to its customers. The Saving Water Partnership has worked with the Washington Association of Landscape Professionals and the Washington State Nursery and Landscape Association to develop informational brochures on proper irrigation and landscaping practices.	*The City currently supports the water use efficiency efforts of these groups through the Saving Water Partnership. Because resources to accomplish this water use efficiency measure are allocated at the regional level, rather than directly from Duvall, this measure is highly cost-effective for the City.*
Water Use Efficiency Pricing - This water use efficiency measure is also required for medium-sized water systems. All water use efficiency programs are required to consider the benefits and costs of implementing rate design techniques to provide economic incentives to conserve water. The City's rates are structured to emphasize the commodity charge more than the base charge to enable customers to have more control over their	*The City will continue to establish an increasing block rate structure that provides economic incentives for conserving water. Future funds will not be required to continue to support this water use efficiency measure; therefore, this is a cost-effective measure for the City.*

water bill and recognize the benefits of conserving water.	
Utility Financed Retrofit - This water use efficiency measure is only required for large systems. This measure requires that the City "install water efficient fixtures in existing residences and commercial/industrial facilities by: (a) providing fixtures at no cost, (b) giving a rebate for consumer purchased fixtures, or (c) arranging for suppliers to provide fixtures at a reduced price." Currently, the Saving Water Partnership has a rebate program for residential toilets and certain irrigation equipment, and offers business rebates and technical assistance.	*The City will continue to support and promote the regional water fixture rebate program of the Saving Water Partnership. Because resources to accomplish this water use efficiency measure are allocated at the regional level, rather than directly from the City, this measure is highly cost-effective for the City.*
Seasonal Demand Management - This includes water use efficiency measures aimed at controlling peak seasonal demand. The evaluation of this measure is not required for Duvall, because the *Conservation Planning Requirements* lists it as a recommended measure for large and regional systems only.	*Although this is not a cost-effective measure, it is prudent in continuing to support the City's long-range efforts to conserve regional water resources.*
Recycling/Reuse – Ecology requires that the City "Examine opportunities for water reuse and recycling as an approach to providing additional water." The City currently operates its own Wastewater Treatment Plant that could be a source of reclaimed water for non-potable uses such as irrigation, commercial and/or other beneficial uses. A list of Duvall's largest water users in 2009 is shown in **Table 4-2** of the City of Duvall's Comprehensive Water System Plan. The use of reclaimed water by these customers may have the most impact on reducing overall water consumption; therefore, the City will continue to consider how water reclamation activities could target these large water users. The following identifies potential water reclamation opportunities that the City may pursue. These potential uses for reclaimed water are also summarized in the *Reclaimed Water Checklist* on page 8 of this plan. A more detailed feasibility analysis will be performed as part of CIP CW2, as described in **Chapter 9** of the City's Comprehensive Water System Plan, to determine the reclamation activities that could be implemented by the City in the 6-year and 20-year planning periods.	*The City will evaluate methods that would provide reclaimed water from the new Wastewater Treatment Plant for non-potable uses to City parks, the Riverview School District, Duvall Village or other water system customers for irrigation or other purposes. The City will also further consider reclaimed water use for large water users that have large potential water savings and will begin to implement reclaimed water use once it is deemed cost-effective at these locations.*
Riverview School District	
Potential Use: Landscape irrigation at Cherry Valley Elementary School Potential Water Savings: 320,000 gallons per year estimated Operational Feasibility: The Cherry Valley Elementary School is located approximately one mile northeast of the Wastewater Treatment Plant. Irrigation pipe and associated appurtenances will need to be constructed to convey reclaimed water to the school. Alternatively, water trucks may instead be used to haul water to the elementary school site as is currently done by the City to irrigate parks with water from the Taylor's Landing Well. Regular irrigation of all landscaping would require a significant effort from City or school district staff. Financial Feasibility: Construction of approximately one mile of irrigation pipe, most of which would be located in the City's business district, would be quite costly. Further financial analyses will need to be performed to determine potential cost sharing opportunities that may be achieved between the City, the school district, and other potential reclaimed water users that may be located along the proposed alignment. The City will need to perform a more detailed feasibility analysis to determine the cost effectiveness of constructing an irrigation system to the elementary school. The labor hours necessary to haul water to irrigate all landscaping is more than the cost savings that may be realized by using reclaimed water. However, it may be feasible to irrigate a portion of the school district's landscaping with reclaimed water to supplement the potable water supply from the existing irrigation system.	
City of Duvall	

Potential Use: Landscape irrigation at city parks; street sweeping; washing sidewalks; dust control and other construction purposes. Potential Water Savings: 100,000 gallons per year estimated Operational Feasibility: Currently, the City hauls water in water trucks from the Taylor's Landing Well to irrigate some city parks. Utilizing reclaimed water from the Wastewater Treatment Plant, a similar program may be implemented with minimal impact to existing maintenance practices. Additionally, reclaimed water may be hauled for use by the City for street sweeping, dust control, and dust control at construction sites, which currently utilizes the City's potable water supply. Financial Feasibility: This program may be implemented with minimal costs to the City since a similar practice is already in place to haul water. The cost savings that may be realized from limiting the use of potable water for landscape irrigation at city parks, street sweeping, washing sidewalks, dust control and other construction purposes make this a cost-effective option for the City to implement.
Duvall Village
Potential Use: Landscape irrigation for multi-family development. Potential Water Savings: 1,000,000 gallons per year estimated Operational Feasibility: The City is currently coordinating with the developers of Duvall Village to evaluate the extent that reclaimed water from the Wastewater Treatment Plant can be used on the property for fire suppression, wetland mitigation and landscape irrigation purposes. The proposed development is located immediately south of the Wastewater Treatment Plant; therefore, minimal piping will be necessary to convey reclaimed water to the property. A reclaimed water system separate from the potable water system would need to be installed onsite in the buildings with a backflow prevention assembly to prevent potential cross contamination. The reclaimed water system would otherwise operate in the same manner as a system utilizing solely potable water. Financial Feasibility: This project will be developer funded. The City will likely supply reclaimed water to Duvall Village at a reduced rate and because the property has not yet been developed, installation of the additional piping to convey the reclaimed water supply will be relatively inexpensive compared to retrofitting an existing building or development. The value of the water savings to the future residents that may be realized from the construction of this project is approximately $75,000 over a 20-year period. To be cost-effective, the costs associated with the installation of the proposed piping, as well as the cost of the reclaimed water supplied, will have to be less than $75,000 over a 20-year period.

Water Use Efficiency Program Results and Monitoring

Since adopting the water use efficiency goals and implementing its water use efficiency program the City has reduced its average per capita water consumption while increasing its population. Between 2003 and 2010 the population of the City increased approximately 9.7%, and both total and per capita water consumption decreased by 1.8% and 2.7% respectively. This reduction can be attributed to the increased awareness and interest in water use efficiency of our customers, and improved accounting and tracking methods.

The City will continue to monitor overall water use, per capita water use, and the amount of unaccounted-for water on an annual basis. The City will monitor the success or failure of its water use efficiency program by analyzing this data and determining the long-term trend in per capita water usage. The City will evaluate the effectiveness of water use efficiency methods, to determine if existing programs should be continued, or if new methods should be instituted. If the results of the program monitoring show that the water savings' goals for per capita water use are not being met, more rigorous program implementation or additional program items will be considered.

Reclaimed Water Potential Use Checklist	✓	Est. Future Annual Use	Est. Future Annual Savings
Crop Irrigation			
Trees	☐	N/A	N/A
Sod	☐	N/A	N/A
Nursery	☐	N/A	N/A
Pasture	☐	N/A	N/A
Irrigation of Food Crops	☐	N/A	N/A
Landscape Irrigation			
Cemeteries	☐	N/A	N/A
Freeway Landscapes	☐	N/A	N/A
Other Restricted Landscape Areas	☐	N/A	N/A
Golf Courses	☐	N/A	N/A
Parks	☑	50,000 gal	$100
Playgrounds	☐	N/A	N/A
Schoolyards	☑	320,000 gal	$640/$1,200[1]
Other Open Access Areas	☐	N/A	N/A
Residential Landscapes	☑	900,000 gal	$1,800/$3,400[1]
Ponds			
Landscape Impoundments	☐	N/A	N/A
Recreational Impoundments	☐	N/A	N/A
Water Trucks			
Street Sweeping	☑	30,000 gal	$60
Fire fighting & protection	☐	N/A	N/A
Washing of Corporation Yards, Lots, and Sidewalks	☑	10,000 gal	$20
Dust Control (Dampening Unpaved Roads, Other Surfaces)	☑	10,000 gal	$20
Dampening Soil for Compaction (Construction Sites, Landfills, Pipelines, etc.)	☐	N/A	N/A
Other			
Toilet and Urinal Flushing	☐	N/A	N/A
Lift Stations	☐	N/A	N/A
Ship Ballast	☐	N/A	N/A
Fish Hatchery Basins	☐	N/A	N/A
Washing Aggregate and Making Concrete	☐	N/A	N/A
Flushing of Sanitary Sewers	☐	N/A	N/A
Industrial Boiler Feed	☐	N/A	N/A
Industrial Cooling	☐	N/A	N/A
Industrial Process	☐	N/A	N/A
*Other uses not listed above			
Duvall Village Wetland Mitigation	☑	100,000 gal	$200/$375[1]
	☐		
	☐		
	☐		
	☐		
	☐		
	☐		
	☐		
	☐		
	☐		
	☐		
	☐		

1 = Annual savings based on customer purchase price.

APPENDIX H

Water System Construction Standards

City of Duvall
Small Town. Real Life.

Memorandum

To: Department of Health, File
From: Engineering Department
Date: July 6, 2012
Re: Comprehensive Water System Plan – Submittal Exception

The City of Duvall requests a submittal exception in accordance with WAC 246-290-125. Included in Appendix H of the City's comprehensive water system plan are the City's standard water system details as well as standard construction and testing procedures for water system projects.

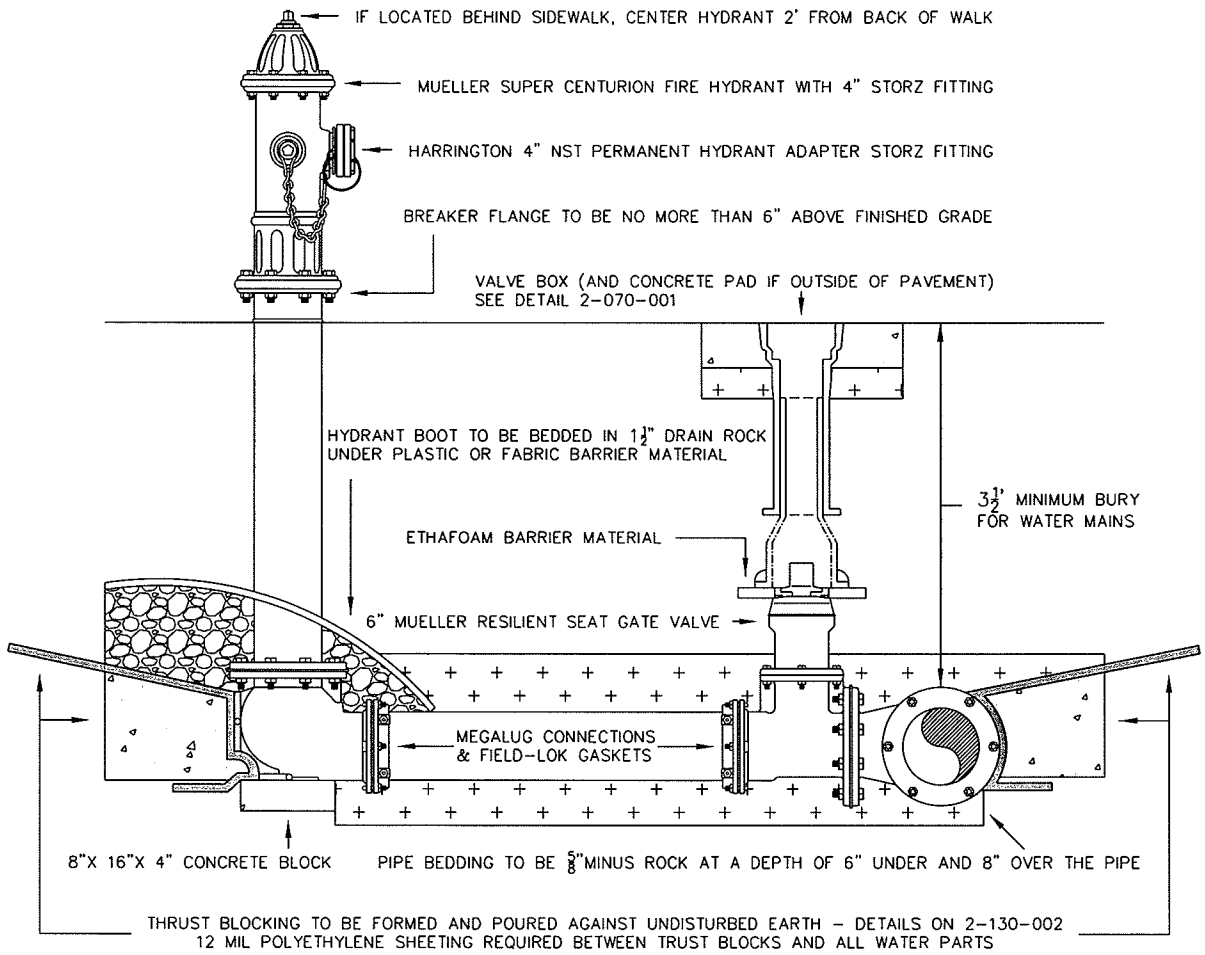

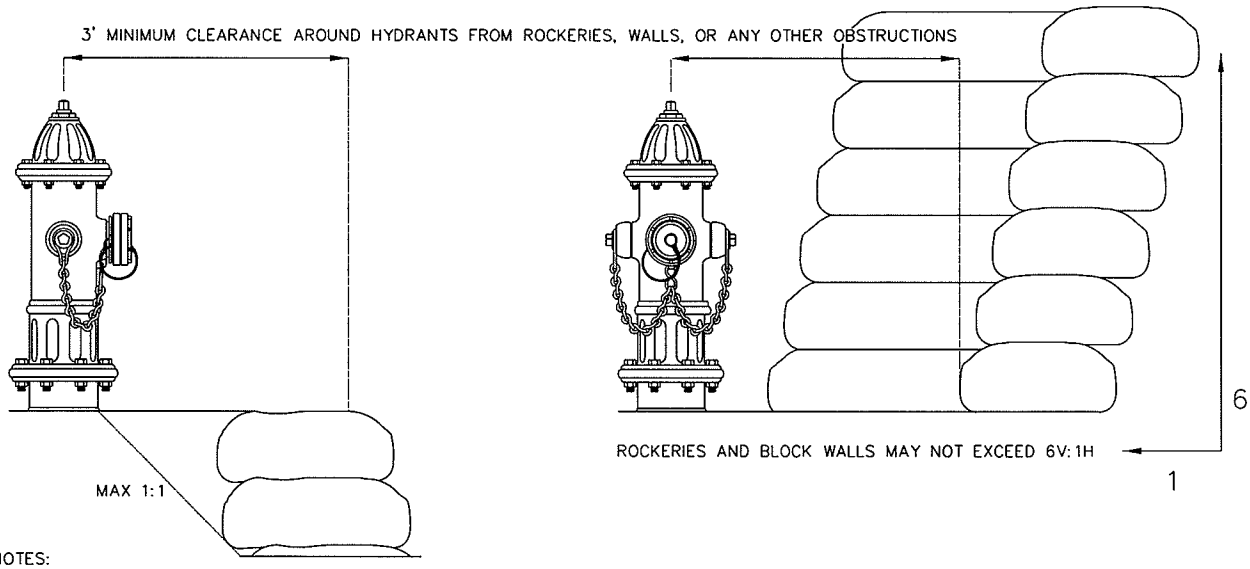

NOTES:

PAINT HYDRANT WITH TWO COATS OF QUICK-SET ENAMEL YELLOW HYDRANT PAINT, FAR WEST PAINT COMPANY # 403472.

STENCIL DISTANCE FROM THE VALVE TO THE MARKER (TO THE NEAREST FOOT) IN 2" BLACK NUMBERS DIRECTLY INLINE WITH THE FOOT VALVE.

WHEN HYDRANT IS LOCATED BEHIND A DITCH, INSTALL A CULVERT FOR ACCESS TO HYDRANT. SEE INSPECTOR FOR SIZE AND MATERIALS.

PLACE BLUE RETRO-REFLECTIVE TURTLE IN THE CENTER OF ROADWAY ADJACENT TO FIRE HYDRANT.

DUVALL DESIGN STANDARDS: 2007			City of Duvall	FIRE HYDRANT INSTALLATION
REVISION	BY	DATE		
	DLC	03-17-11		DRAWING NUMBER 0-06-001

F:\Public Works\Development Guidelines\DDS Manual\2009 Update\Details\DWG\2-06-001 Fire Hydrants DC. dwg]

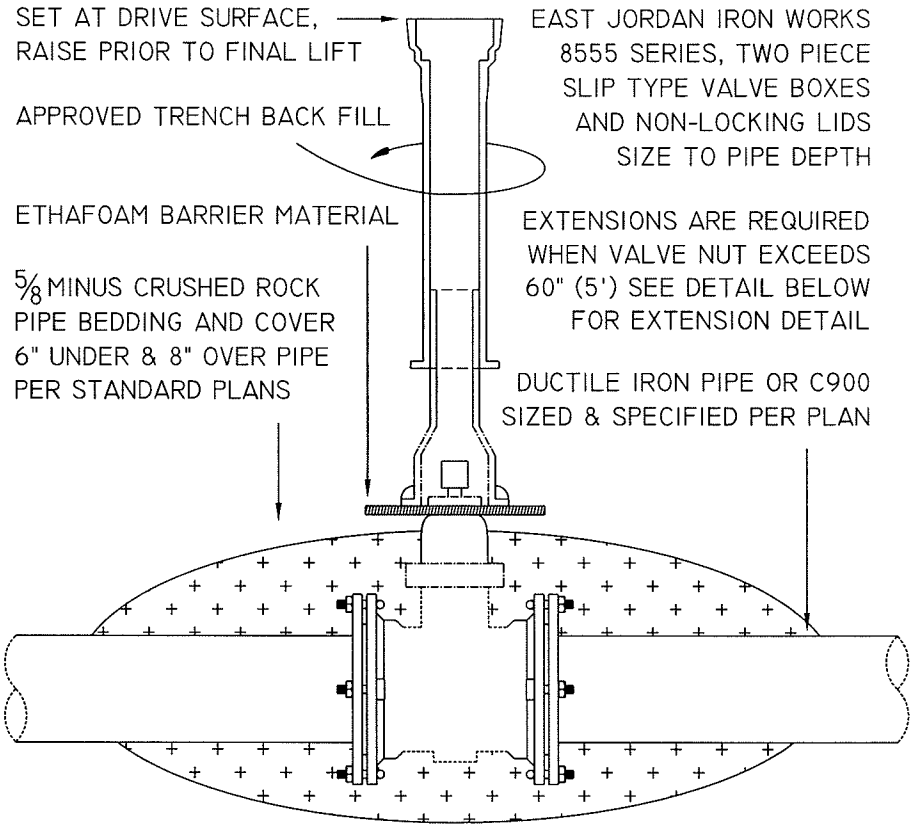

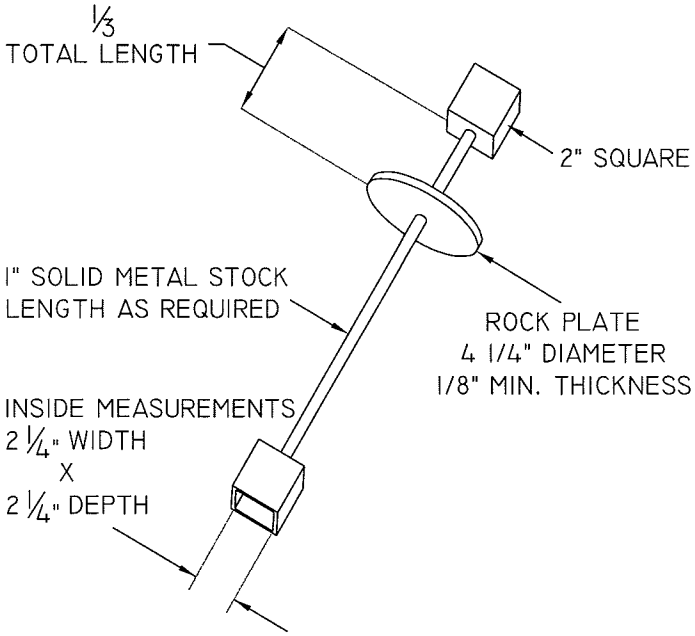

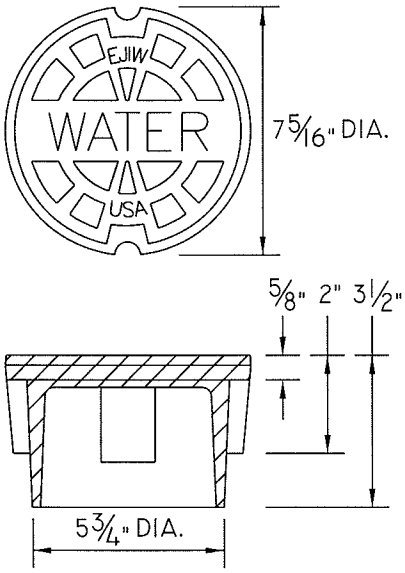

NOTES:
ALL EXTENSIONS ARE TO BE MADE OF STEEL. SIZE TO ALLOW VALVE OPERATION WITHIN 60" (5') OF SURFACE.
EXTENSIONS ARE TO BE A MINIMUM OF 12" LONG. ONLY ONE EXTENSION MAY BE USED PER VALVE ASSEMBLY.
PAINT ENTIRE ASSEMBLY WITH TWO COATS OF ATCO # 222 CARBON ELASTIC.

DUVALL DESIGN STANDARDS: 2007			City of Duvall	VALVE BOX AND EXTENSION DETAIL
REVISION	BY	DATE		
	DLC	03-17-11		DRAWING NUMBER 0-07-001

F:\Public Works\Development Guidelines\DDS Manual\2009 Update\Details\DWG\2-07-001 Valve Box DC. dwg]

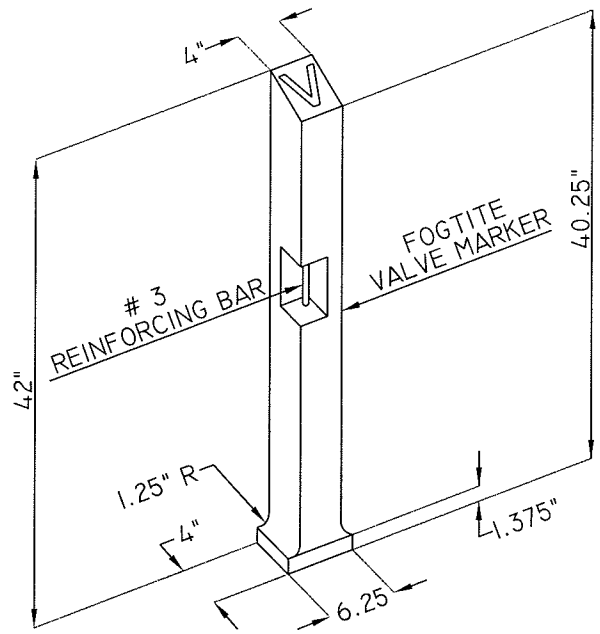

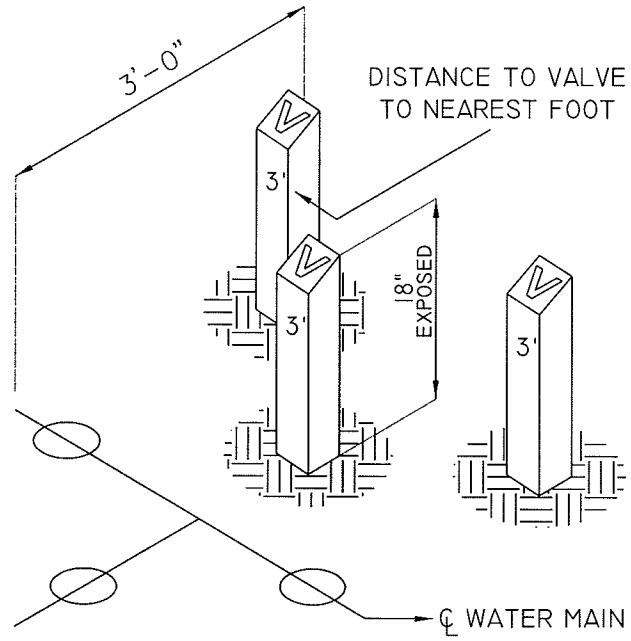

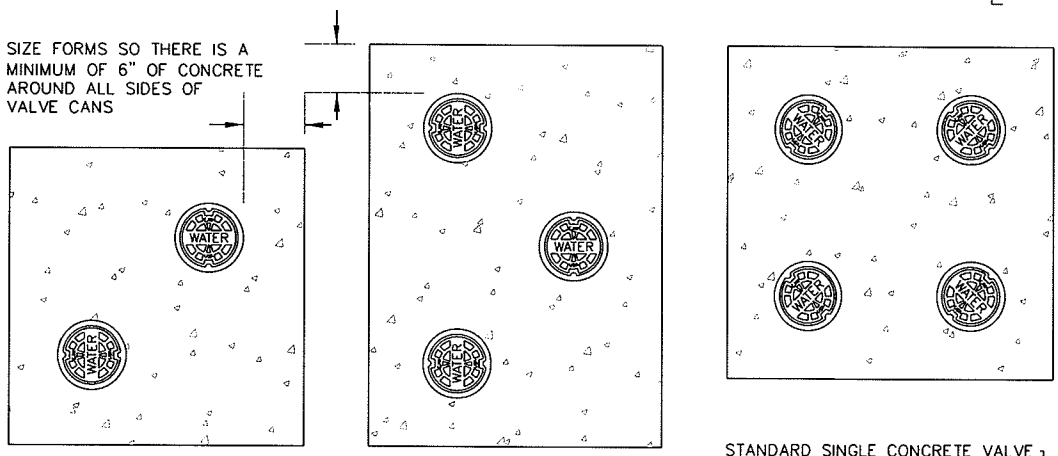

STANDARD SINGLE CONCRETE VALVE CAN PAD TO BE 2'X2' MINIMUM

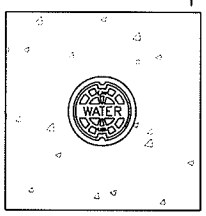

NOTES:

VALVE MARKER POSTS AND CONCRETE PADS AROUND VALVE CANS ARE REQUIRED ANYTIME VALVE CANS ARE LOCATED IN A NON-PAVED AREA.

VALVE MARKER POST SHALL BE FROM FOGTITE INC. USE ONE VALVE MARKER POST PER VALVE.

THE POST SHALL BE SET AT RIGHT ANGLES TO THE ROADWAY FROM THE VALVE AND SHALL BE SITUATED IN A SAFE AND REASONABLY CONSPICUOUS LOCATION.

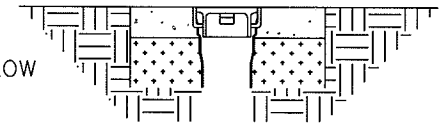

PAINT VALVE MARKERS WITH TWO COATS OF QUICKSET ENAMEL YELLOW HYDRANT PAINT, FAR WEST PAINT COMPANY # 403472.

STENCIL DISTANCE FROM THE VALVE TO THE MARKER (TO THE NEAREST FOOT) IN 2" BLACK NUMBERS.

VALVE CANS LOCATED IN NON-PAVED AREAS MUST HAVE A 2' X 2' CONCRETE PAD POURED AROUND THEM. FOR VALVE CLUSTERS FORM AS DETAILED ABOVE AND SIZE FORMS SO A MINIMUM OF 6" OF CONCRETE IS AROUND ALL VALVE CANS. NO EARTH FORMING ALLOWED. CONCRETE PAD TO BE 4" THICK OVER 6" OF COMPACTED $\frac{5}{8}$" MINUS CRUSHED ROCK.

VALVE CANS FOR BUTTERFLY VALVES TO BE LOCATED ON THE NORTH AND EAST SIDES OF THE MAIN.

DUVALL DESIGN STANDARDS: 2007			City of Duvall	VALVE MARKER DETAIL
REVISION	BY	DATE		
	DLC	03-18-11		DRAWING NUMBER 2-07-002

F:\Public Works\Development Guidelines\DDS Manual\2009 Update\Details\DWG\2-07-002 Valve Markers DC.dwg]

PAINT STAND PIPE WITH TWO COATS OF QUICK SET ENAMEL YELLOW HYDRANT PAINT, FAR WEST PAINT COMPANY # 403472.
(SAME COLOR AS HYDRANTS AND VALVE MARKERS)

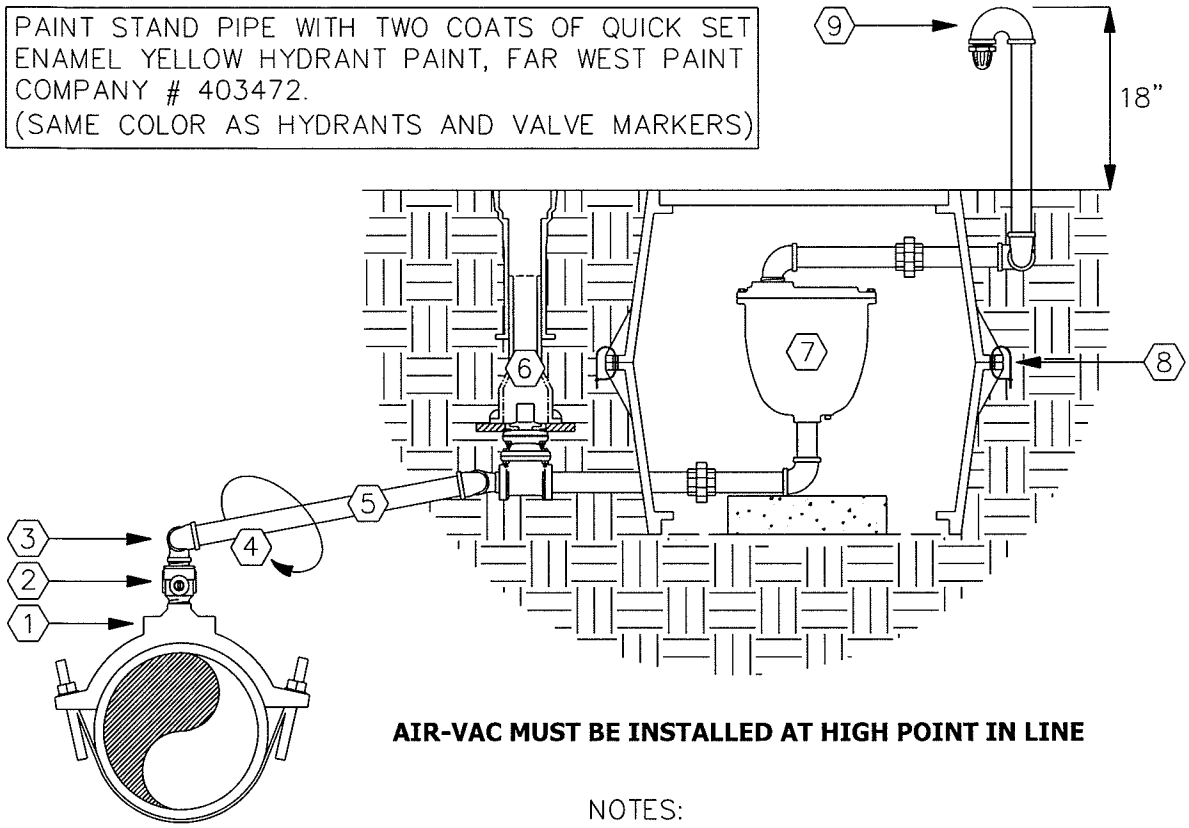

AIR-VAC MUST BE INSTALLED AT HIGH POINT IN LINE

NOTES:

1. SADDLE SHALL BE EITHER FORD FC202 OR ROMAC 202NS PLACED SO OUTLET IS UP
2. FORD FB400 OR MUELLER 300 BALLCORP VALVES (AWWA/CC TAPER THREAD INLET BY IRON PIPE THREAD OUTLET)
3. (1) DOUBLE FEMALE 90 & (1) STREET 90 TO CREATE A FULLY SWIVELING JOINT.
4. PIPE BED ZONE SHALL BE 3" OF SAND ALL AROUND PIPE
5. ALL PIPES & FITTING UNDER AIR-VAC VALVE SHALL BE 2" BRASS. EVERYTHING ABOVE MAY BE 2" GALVANIZED STEEL. AIR-VAC LINE SHALL HAVE A MINIMUM OF 2% SLOPE UPHILL TOWARD THE AIR-VAC VALVE TO ALLOW PURGING OF AIR.
6. 2" MUELLER RESILIENT WEDGE (N.R.S.) GATE VALVE WITH I.P.S. THREADED ENDS. PLACE GATE VALVE AS CLOSE TO BOX AS PRACTICAL. SEE DRAWING 2-070-001 FOR VALVE BOX DETAILS AND INFORMATION. NO CONCRETE PAD IS REQUIRED AROUND VALVE BOX IF IT IS PLACED NEXT TO BOX.
7. APCO 145C COMBINATION AIR VALVE (AIR-VAC). AIR-VAC IS CONNECTED IN LINE WITH A UNION AT EITHER SIDE AS SHOWN. USE A 2" STREET 90 DIRECTLY INTO TOP OF VALVE AND A DOUBLE FEMALE 90 BELOW. ADJUST HEIGHT WITH NIPPLE LENGTH BELOW VALVE. PLACE WEIGHT OF ASSEMBLY ON 8"X 16"X 4" CONCRETE BLOCK. INSULATE WITH FIBERGLASS INSULATION TO TOP OF AIR-VAC.
8. BOXES SHALL BE CARSON 1730 HDPE (SHOWN) FOR USE OUT OF THE TRAVEL LANE. USE NYLON ZIP-TIES TO CONNECT THE BOTTOM OF THE BOXES TOGETHER. FOR APPLICATIONS IN A PAVED AREA USE MID-STATES 1730-R HDPE TRAFFIC RATED BOXES WITH DUCTILE IRON LIDS. STACK TWO BOXES IN THE CONVENTIONAL MANNER. BOXES TO BE LOCATED IN LANDSCAPE STRIP UNLESS OTHERWISE APPROVED.
9. RETURN BEND WITH BEEHIVE STRAINER

DUVALL DESIGN STANDARDS: 2007			City of Duvall	2" AIR AND VACUUM VALVE
REVISION	BY	DATE		
	DLC	03-18-11		DRAWING NUMBER 2-07-003

F:\Public Works\Development Guidelines\DDS Manual\2009 Update\Details\DWG\2-07-003 AIR-VAC DC. dwg]

'HOT TAP'

MAY BE USED ANYTIME THE BRANCH SIZE IS SMALLER THAN THE MAIN SIZE
SAME SIZE TAPS MAY BE PERFORMED ON DUCTILE IRON PIPE ONLY

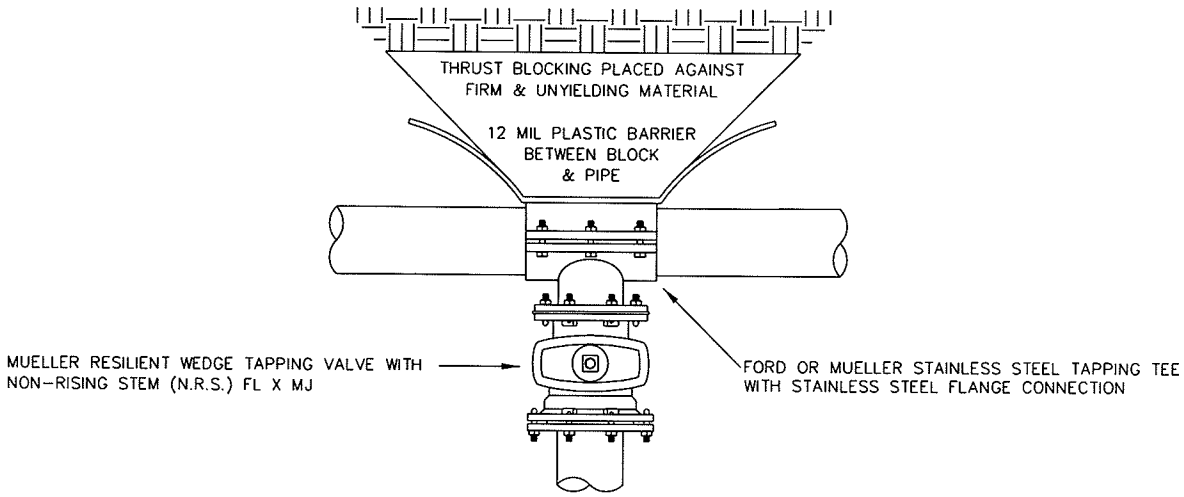

'CUT-IN'

MUST BE USED WHEN EXISTING WATER MAIN IS MADE FROM A/C, C-900, OR PVC PIPE
AND THE NEW BRANCH MUST BE THE SAME SIZE

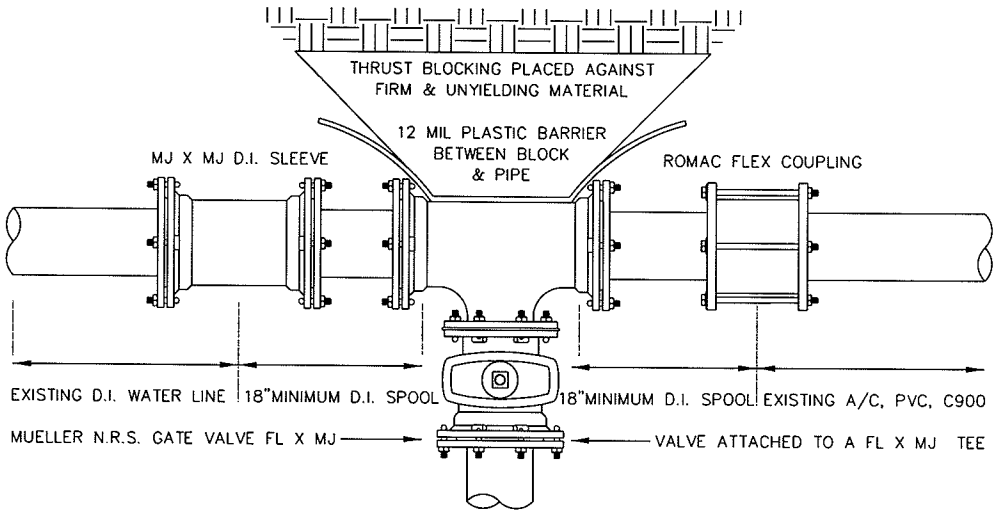

NOTES:

ALL CONNECTIONS TO BE MADE WITH THE CITY INSPECTOR PRESENT.

WHEN HOT TAPPING' SUPPORT WEIGHT OF VALVE BY PLACING A CONCRETE BLOCK UNDER THE VALVE BEFORE TIGHTENING THE TAPPING TEE.

CUT-IN'S REQUIRING WATER MAIN SHUTDOWN ARE REQUIRED TO HAVE A MINIMUM OF 3 DAYS NOTICE TO ALL EFFECTED CUSTOMERS IN WRITING AND APPROVED BY THE CITY OF DUVALL. TO BE CONSIDERED ONE FULL DAY SHUT OFF NOTICES MUST BE DELIVERED BEFORE 12:00 PM. DO NOT COUNT WEEKEND DAYS.

ALL PIPE AND FITTINGS TO BE SWABBED WITH A CL_2 SOLUTION OF AT LEAST 50 PPM.

CONTRACTOR MAY NOT OPERATE CITY WATER VALVES UNLESS GIVEN CONSENT BY THE CITY INSPECTOR OR DURING AN EMERGENCY.

DUVALL DESIGN STANDARDS: 2007			City of Duvall	CUT-IN CONNECTIONS AND HOT-TAPPING OF WATER MAIN
REVISION	BY	DATE		
NEW FORMAT	DLC	03-18-11		DRAWING NUMBER 2-07-004

F:\Public Works\Development Guidelines\DDS Manual\2009 Update\Details\DWG\2-07-004 Water Main Connection DC. dwg]

-GENERAL PROFILE OF SERVICE CONNECTION-

REFER TO DRAWINGS 2-09-001B THROUGH 2-09-003B FOR METER ASSEMBLY DETAILS

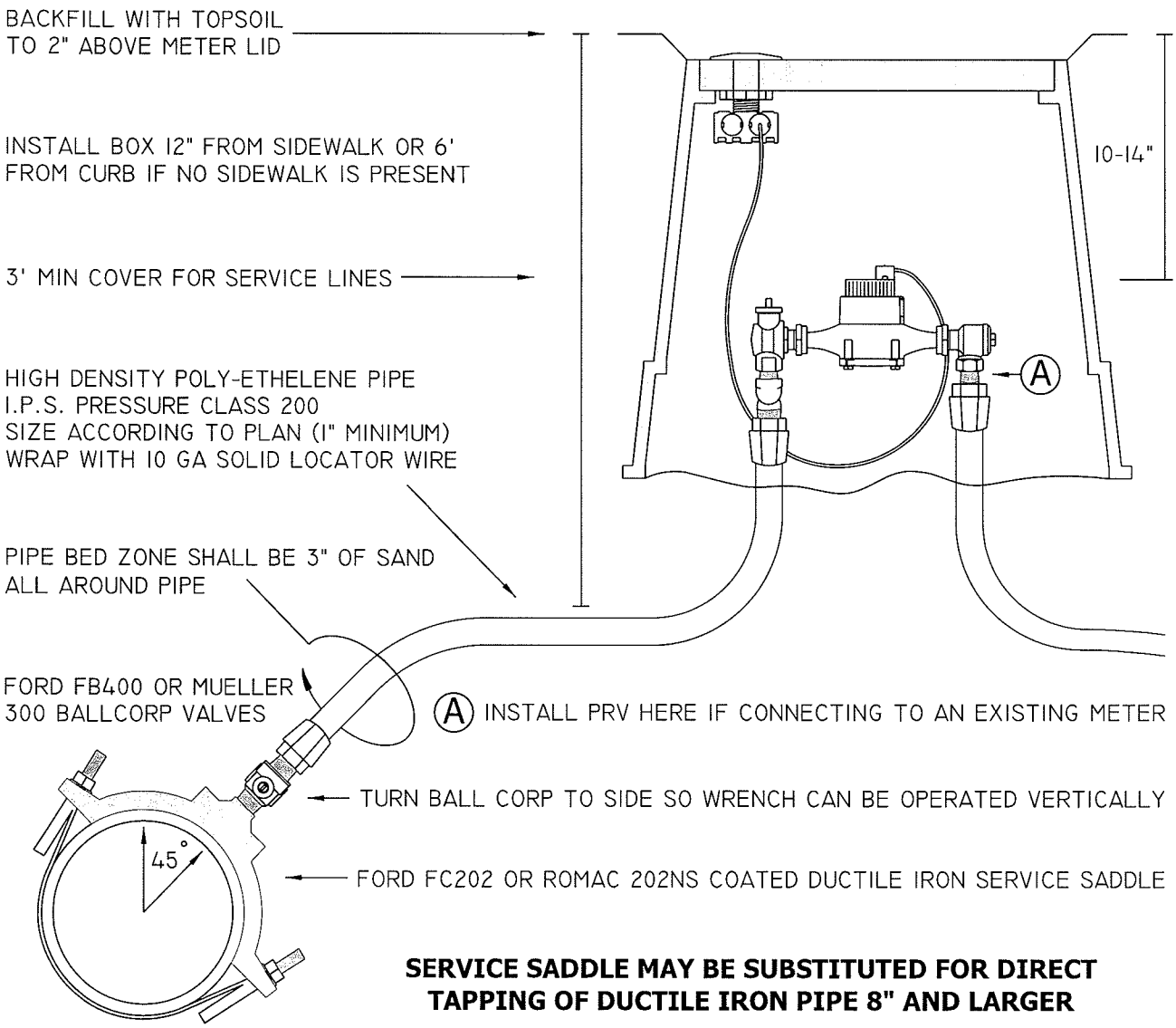

SERVICE SADDLE MAY BE SUBSTITUTED FOR DIRECT TAPPING OF DUCTILE IRON PIPE 8" AND LARGER

METER BOX INFORMATION

NON-TRAFFIC BEARING METER BOXES: BLACK BOX WITH FLUSH MOUNT LID AND READER
SINGLE: CARSON 1419-18 DOUBLE: CARSON 1730-18

TRAFFIC BEARING METER BOXES: BLACK BOX WITH DUCTILE IRON LID AND READER
SINGLE: CARSON MSBCF-1118-18XL DOUBLE: CARSON MSBCF-1730-18XL

IRRIGATION METER BOXES: GREEN BOX WITH GREEN SOLID T-COVER LID
SINGLE: CARSON 1419-18 DOUBLE: CARSON 1730-18

DO NOT ORDER METER LIDS WITH PRE-DRILLED TOUCH-TO-READ HOLE.
THE CITY WILL DRILL THE LIDS AT THE TIME OF METER INSTALLATION

DUVALL DESIGN STANDARDS: 2007

REVISION	BY	DATE
INCREASED METER DEPTH	DLC	04-07-10

City of Duvall

$\frac{5}{8}$" - 1" WATER SERVICE CONNECTION

DRAWING NUMBER 2-09-001

F:\Public Works\Development Guidelines\DDS Manual\2009 Update\Details\DWG\2-09-001 Water Service Profile DC.dwg

NON-TRAFFIC BEARING METER BOXES: BLACK CARSON BOX WITH FLUSH MOUNT LID AND READER
SINGLE: CARSON 1419 DOUBLE: CARSON 1730

TRAFFIC BEARING METER BOXES: MID-STATES BOX WITH DUCTILE IRON LID AND READER
SINGLE: MID-STATES 1118-R DOUBLE: MID-STATES 1730-R

IRRIGATION METER BOXES: GREEN CARSON BOX WITH GREEN SOLID T-COVER LID
SINGLE: CARSON 1419 DOUBLE: CARSON 1730

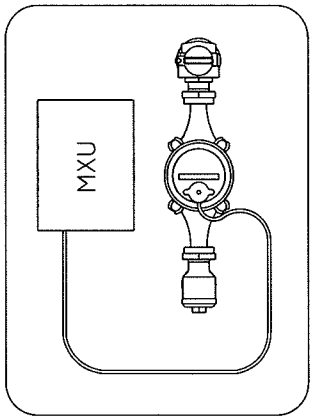

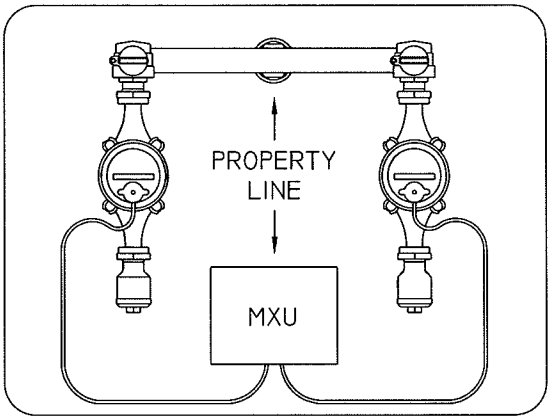

BACKFILL WITH TOPSOIL
TO 2" ABOVE METER LID

INSTALL 12" FROM SIDEWALK
OR 6' FROM CURB

HIGH DENSITY POLY-ETHELENE PIPE
I.P.S. PRESSURE CLASS 200
SIZE ACCORDING TO PLAN
WRAP WITH 10 GA SOLID LOCATOR WIRE

3' MINIMUM COVER FOR SERVICE LINES

PIPE BED ZONE SHALL BE 3" OF SAND
ALL AROUND PIPE

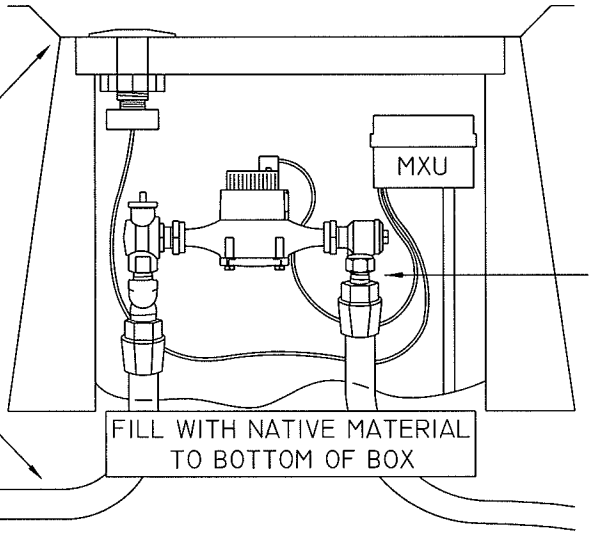

IF PRV'S ARE TO BE INSTALLED INSERT
BETWEEN CHECK VALVE & PIPE CONNECTION

TYPICAL PROFILE OF SERVICE CONNECTION
SEE SHEET 2-090-002E FOR MORE DETAILS

FORD OR MUELLER
BALLCORP

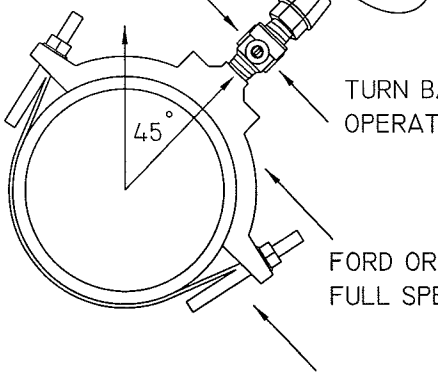

TURN BALL CORP TO SIDE SO WRENCH CAN BE
OPERATED VERTICALLY IN A NARROW TRENCH

FORD OR ROMAC SERVICE SADDLE
FULL SPECS ON SHEET 2-090-001B

SERVICE SADDLE MAY BE SUBSTITUTED FOR DIRECT
TAPPING OF DUCTILE IRON PIPE 8" AND LARGER

City of Duvall

STANDARD 5/8" - 1" METER SERVICES	REVISED 1/14/10 DC
REVISED STANDARD PLAN 2-090-001A	

-DOUBLE METERS WITH PRVs LOCATED IN RESIDENCE-

TYPICALLY FOR ALL NEW CONSTRUCTION

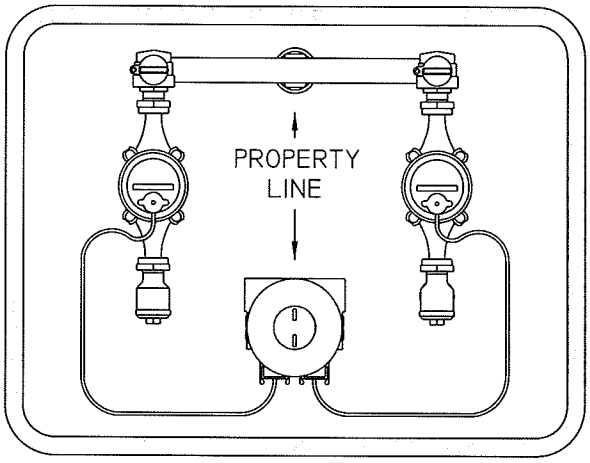

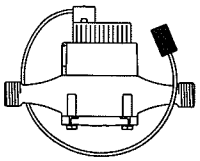

METER INSTALLED BY C.O.D. – $\frac{5}{8}$"X$\frac{3}{4}$" METER = 7$\frac{1}{2}$" FLANGE TO FLANGE, $\frac{3}{4}$"METER = 9" FLANGE TO FLANGE, 1" METER = 10$\frac{3}{4}$" FLANGE TO FLANGE.

FORD OR MUELLER ANGLE BALL METER VALVE (F.I.P. INLET/METER SWIVEL NUT OUTLET)

FORD OR MUELLER ANGLE CHECK VALVE (METER SWIVEL NUT INLET/F.I.P. OUTLET)

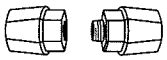

MUELLER INSTA–TITE (MALE OR FEMALE I.P. BY MODIFIED COMPRESSION)

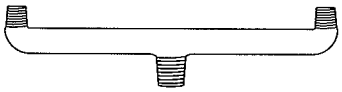

FORD OR MUELLER U–BRANCH WITH M.I.P. CONNECTIONS
OUTLET SPACING SHALL BE A MINIMUM OF 8"
$\frac{5}{8}$"x $\frac{3}{4}$" AND $\frac{3}{4}$" METERS USE: 1" INLET AND $\frac{3}{4}$" OUTLETS
1" METERS USE: 1$\frac{1}{2}$" INLET AND 1" OUTLETS

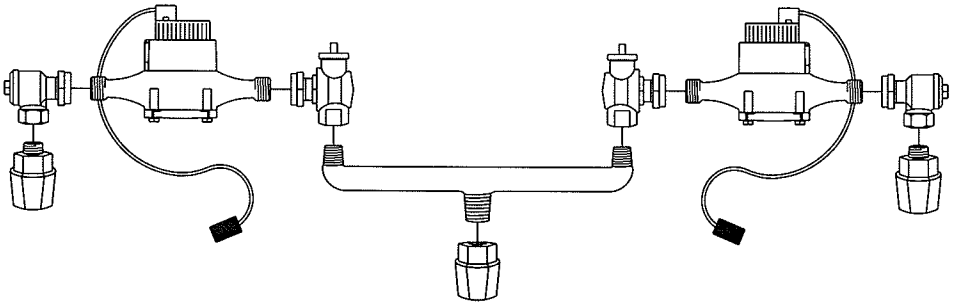

EXPLODED VIEW OF METER ASSEMBLY

DUVALL DESIGN STANDARDS: 2007			City of Duvall	$\frac{5}{8}$"-1" DOUBLE METER SERVICE FOR ALL NEW CONSTRUCTION
REVISION	BY	DATE		
ADDED PART NUMBERS	DLC	10-14-10		DRAWING NUMBER 2-09-002B

F:\Public Works\Development Guidelines\DDS Manual\2009 Update\Details\DWG\2-09-002B Retro-Fit Double Meters DC.dwg

-SINGLE METERS WITH PRVs LOCATED IN METER BOX-

FOR RETROFITTING A NEW SERVICE TO AN EXISTING METER

EXPLODED VIEW OF METER ASSEMBLY

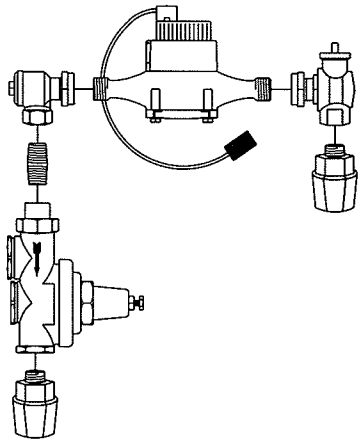

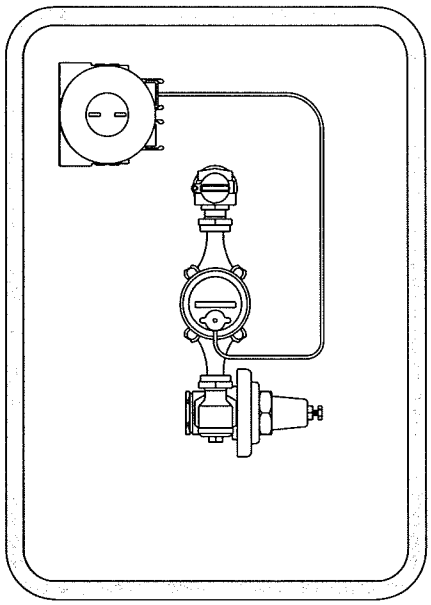

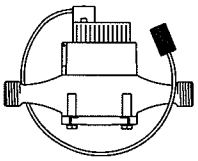

METER INSTALLED BY C.O.D. – $\frac{5}{8}$"X$\frac{3}{4}$" METER = $7\frac{1}{2}$" FLANGE TO FLANGE, $\frac{3}{4}$"METER = 9" FLANGE TO FLANGE, 1" METER = $10\frac{3}{4}$" FLANGE TO FLANGE.

FORD OR MUELLER ANGLE BALL METER VALVE (F.I.P. INLET/METER SWIVEL NUT OUTLET)

FORD OR MUELLER ANGLE CHECK VALVE (METER SWIVEL NUT INLET/F.I.P. OUTLET)

BRASS CLOSED NIPPLE SIZED TO MATCH PRV (RANGES FROM $\frac{3}{4}$" TO 1")

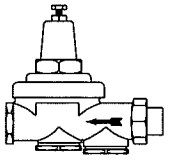

WILKINS MODEL 600 PRV (F.I.P. UNION INLET/F.I.P. OUTLET)
$\frac{5}{8}$" X $\frac{3}{4}$" AND $\frac{3}{4}$" METERS USE: $\frac{3}{4}$" PRV, FOR 1" METERS USE: 1" PRV

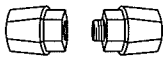

MUELLER INSTA–TITE (MALE OR FEMALE I.P. BY MODIFIED COMPRESSION)

DUVALL DESIGN STANDARDS: 2007

REVISION	BY	DATE
ADDED PART NUMBERS	DLC	10-18-10

City of Duvall

-ALTERNATE-
$\frac{5}{8}$"-1" SINGLE METER SERVICE WITH PRV's IN BOX

DRAWING NUMBER 2-09-003A

F:\Public Works\Development Guidelines\DDS Manual\2009 Update\Details\DWG\2-09-003A Retro-Fit Single Meter DC.dwg

-DOUBLE METERS WITH PRVs LOCATED IN METER BOX-

FOR RETROFITTING A NEW SERVICE TO AN EXISTING METER

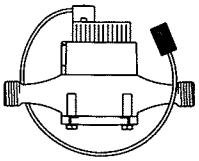

WATER METER INSTALLED BY C.O.D.
$\frac{5}{8}$"X$\frac{3}{4}$" METER = $7\frac{1}{2}$" FLANGE TO FLANGE
$\frac{3}{4}$"METER = 9" FLANGE TO FLANGE
1" METER = $10\frac{3}{4}$" FLANGE TO FLANGE

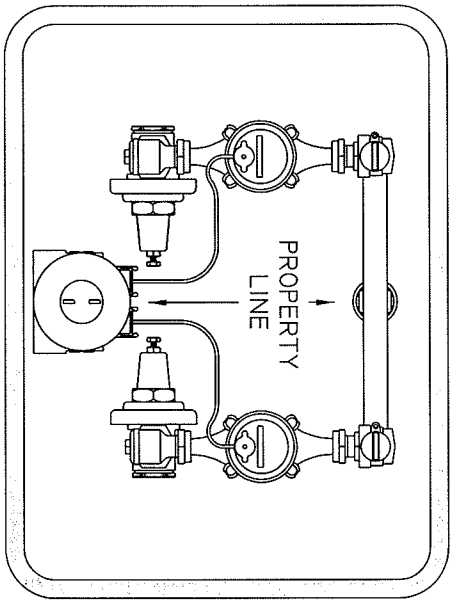

FORD OR MUELLER ANGLE CHECK VALVE
METER SWIVEL NUT INLET BY F.I.P. OUTLET

FORD OR MUELLER ANGLE BALL METER VALVE
F.I.P. INLET BY METER SWIVEL NUT OUTLET

BRASS CLOSED NIPPLE SIZED TO MATCH PRV

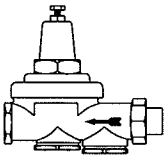

WILKINS MODEL 600 PRV
F.I.P. UNION INLET BY F.I.P. OUTLET
$\frac{5}{8}$"X$\frac{3}{4}$" AND $\frac{3}{4}$"METERS USE $\frac{3}{4}$" PRV
1" METERS USE 1" PRV

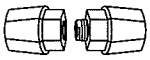

MUELLER INSTA-TITE (MALE OR FEMALE I.P. BY MODIFIED COMPRESSION)

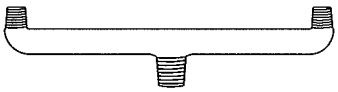

FORD OR MUELLER U-BRANCH WITH M.I.P. CONNECTIONS
OUTLET SPACING SHALL BE A MINIMUM OF 8"
$\frac{5}{8}$"X $\frac{3}{4}$" AND $\frac{3}{4}$" METERS USE: 1" INLET AND $\frac{3}{4}$" OUTLETS
1" METERS USE: $1\frac{1}{2}$" INLET AND 1" OUTLETS

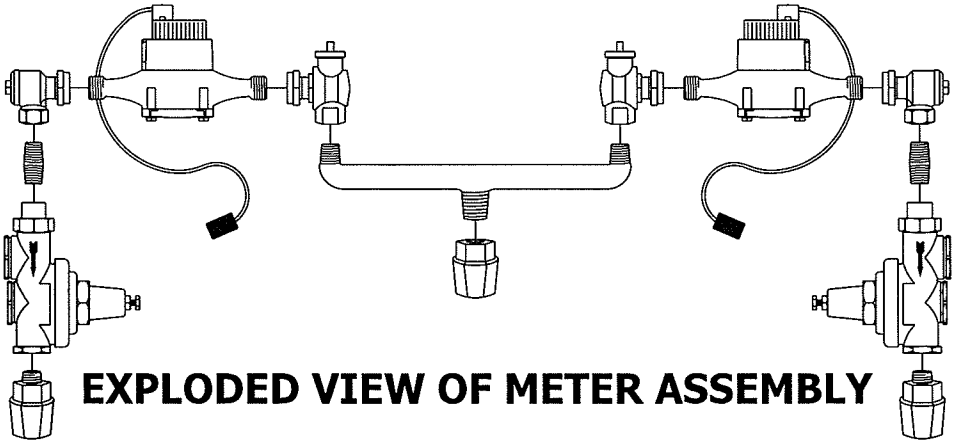

EXPLODED VIEW OF METER ASSEMBLY

DUVALL DESIGN STANDARDS: 2007

REVISION	BY	DATE
ADDED PART NUMBERS	DLC	10-14-10

City of Duvall

-ALTERNATE-
$\frac{5}{8}$"-1" DOUBLE METER SERVICE WITH PRV's IN BOX

DRAWING NUMBER 2-09-003B

F:\Public Works\Development Guidelines\DDS Manual\2009 Update\Details\DWG\2-09-003B Retro-Fit Double Meters DC.dwg

FLANGE STYLE METERS SHALL ALL BE 'SINGLES' - ONE METER PER BOX. SEE BELOW FOR BOX SELECTION

TRAFFIC BEARING: MID-STATES 1730-R WITH DUCTILE IRON LID AND READER

NON-TRAFFIC BEARING: CARSON 1730 WITH BLACK FLUSH MOUNT LID

IRRIGATION: CARSON 1730 WITH GREEN SOLID T-COVER LID

INSTALL METER BOX PER APPROVED PLANS OR FIELD FITTED PER INSPECTORS APPROVAL

BACKFILL TOPSOIL TO 2" ABOVE METER LID

SERVICE LINES TO BE HIGH DENSITY POLY-ETHELENE PIPE
C.T.S. PRESSURE CLASS 200, SIZED ACCORDING TO PLAN
WRAP WITH 10 GA SOLID LOCATOR WIRE
MINIMUM BURY FOR SERVICE LINES SHALL BE 3'
BEDDING SHALL BE 3" OF SAND ALL AROUND PIPE

FORD FB400 OR MUELLER 300 BALLCORP VALVES
AWWA/CC TAPER THREAD INLET X M.I.P. OUTLET
TURN BALL CORP TO SIDE SO WRENCH
CAN BE OPERATED VERTICALLY
IN A NARROW TRENCH

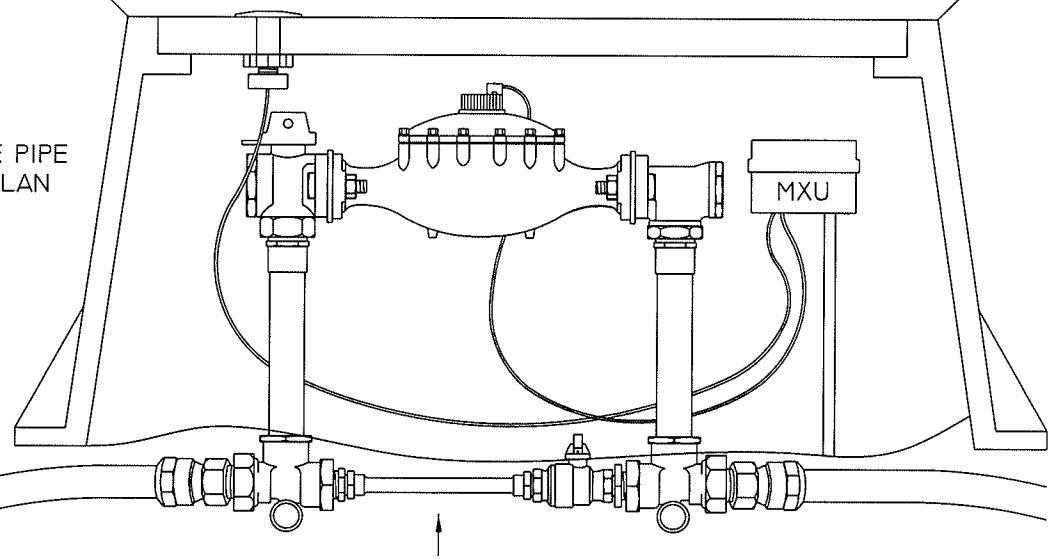

METER SETTERS SHALL BE MUELLER OR FORD AND CONSIST OF A LOCKABLE BALL VALVE METER INLET X ANGLE CHECK METER OUTLET & LOCKABLE VALVED BYPASS. SETTER CONNECTIONS MUST BE F.I.P. X F.I.P. WITH A STANDARD HEIGHT OF 18"

C.T.S. POLY LINE CONNECTIONS SHALL BE MADE WITH MUELLER 110 COMPRESSION CONNECTIONS OR FORD QUICK JOINT COUPLINGS -COMPRESSION FITTINGS SHALL BE I.P. THREAD X C.T.S.-

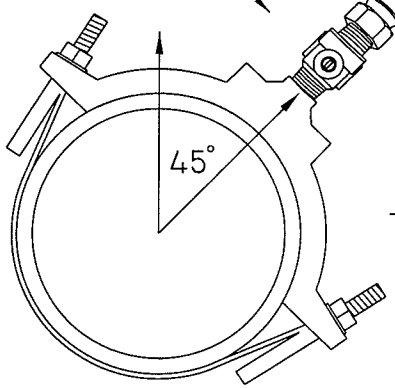

FORD FC202 OR ROMAC 202NS DUCTILE IRON SERVICE SADDLE
NYLON OR EPOXY COATED WITH STAINLESS STEEL BANDS & BOLTS
POSITION SADDLE ON PIPE SO TAP IS 45 FROM VERTICAL
AWWA/CC TAPER THREADS

SERVICE SADDLE MAY BE SUBSTITUTED FOR DIRECT TAPPING OF DUCTILE IRON PIPE 8" AND LARGER

DUVALL DESIGN STANDARDS: 2007

REVISION	BY	DATE
NEW FORMAT	DLC	03-21-11

City of Duvall

1 1/2" AND LARGER 'FLANGE STYLE' METERS

DRAWING NUMBER 2-09-004

(1) Aluminum double door access hatch shall provide a min of 4' x 5' opening and withstand H-20 loads. Hatch should have an assisted opening and be lockable.
(2) Bilco 'Ladder Up' safety post or equivalent. Attach to side of ladder or rung.
(3) Precast concrete utility vault with precast drainage sump. Size for min clearances.
(4) 4 $\frac{1}{2}$" Pressure gauge with turret Case. (0-200 PSI). Attach to copper with brass tee.
(5) Cla-Val pressure reducing valve (P.R.V.) # 90G-01 ABCSKC with level indicator.
(6) Mueller Resilient Wedge (non-rising stem) gate valve with hand wheel operation.
(7) Tapped Blind Flange, Brass Street 90, Brass Bushing(s), $\frac{1}{4}$" Brass ball valve.
(8) Ductile Iron (D.I.) FL x FL Tee
(9) Ductile Iron (D.I.) FL x FL Spool
(10) Ductile Iron (D.I.) FL x MJ Coupler
(11) $\frac{1}{4}$" Brass ball valve and copper line to gauge.
(12) D.I. FL x FL wye strainer with 20 mesh screen.
(13) D.I. FL x FL long sweep 90.
(14) D.I. MJ x MJ 90 with restrained joints.
(15) Mega-lug style follower placed against vault wall and encased in concrete for thrust protection.
(16) D.I. pipe FL x PE. Size for 12" min between inside of vault wall and flange.
(17) D.I. FL x FL wye strainer with $\frac{1}{8}$" dia. screen. (Larger screen size than (12))
(18) 2" brass corporation stop. Ford FB400 or Mueller 300 Ballcorp valve.
(19) Adjustable pipe support with saddle and anchor flange. Space as needed.
(20) Polypropylene ladder. Sized to detail.
(21) Precast sump for gravity drain (2% min) or venturi pump if not obtainable.
(22) 6" min $\frac{5}{8}$ minus crushed rock mechanically compacted and placed over firm and unyielding subgrade. 1 $\frac{1}{4}$" minus crushed rock may be substituted.

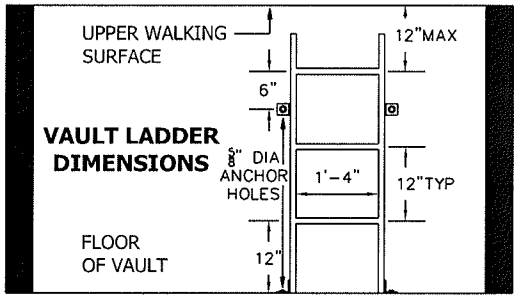

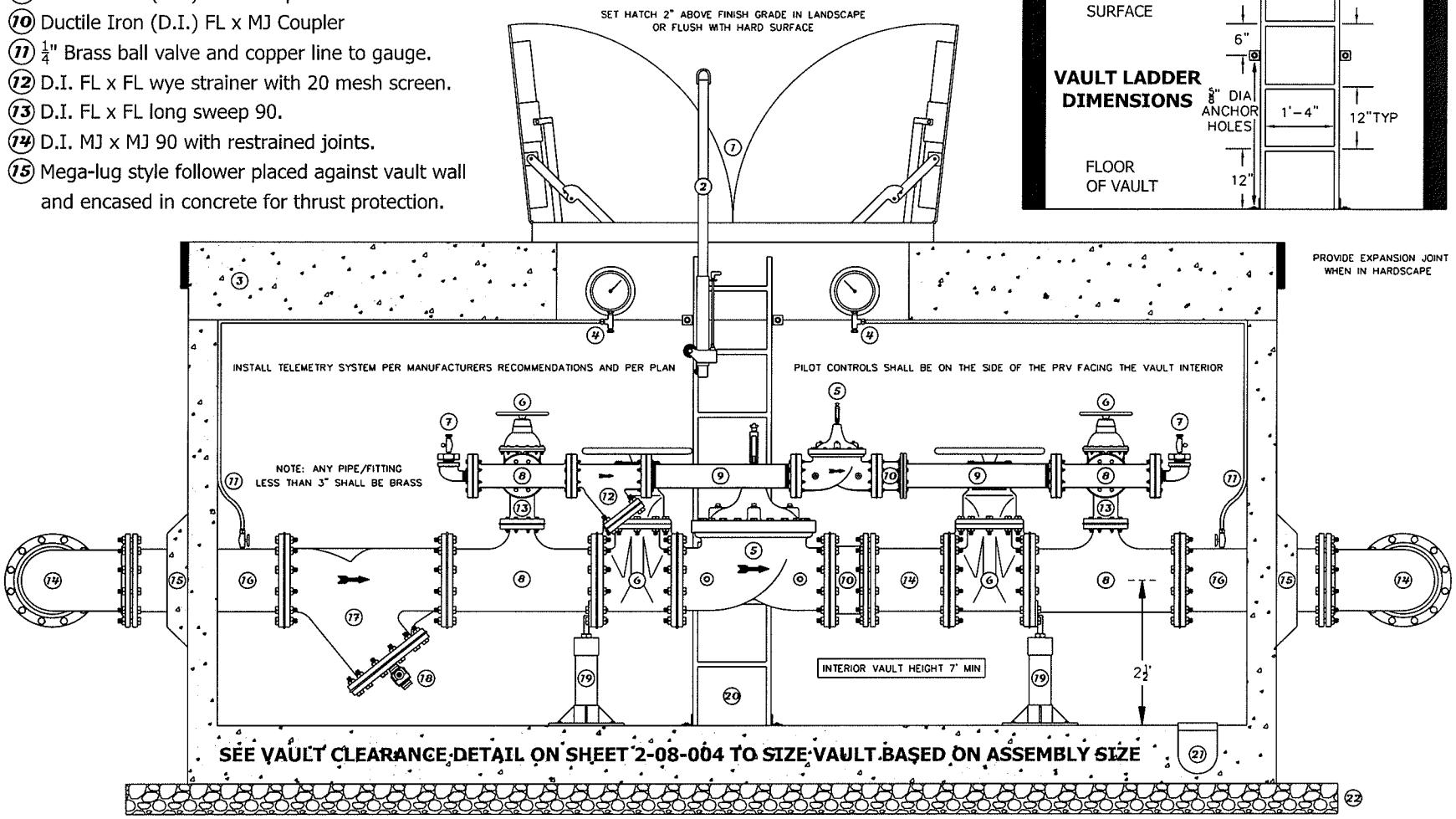

DUVALL DESIGN STANDARDS: 2007

REVISION	BY	DATE
NEW DETAIL	DLC	03-07-12

City of Duvall

PRESSURE REDUCING STATION
PROFILE VIEW

DRAWING NUMBER 2-80-003

1. **IN-GROUND VALVES SHALL ALSO BE MUELLER GV BUT WITH 2" SQUARE OPERATING NUTS.**
2. **ALL BENDS ON PRV LOOP MUST HAVE BOTH RESTRAINED JOINTS AND THRUST BLOCKING.**
3. **BYPASS VALVE SHALL BE PLACED ON THE UPSTREAM MAINLINE TEE. SIZE PIPE PER PLAN.**

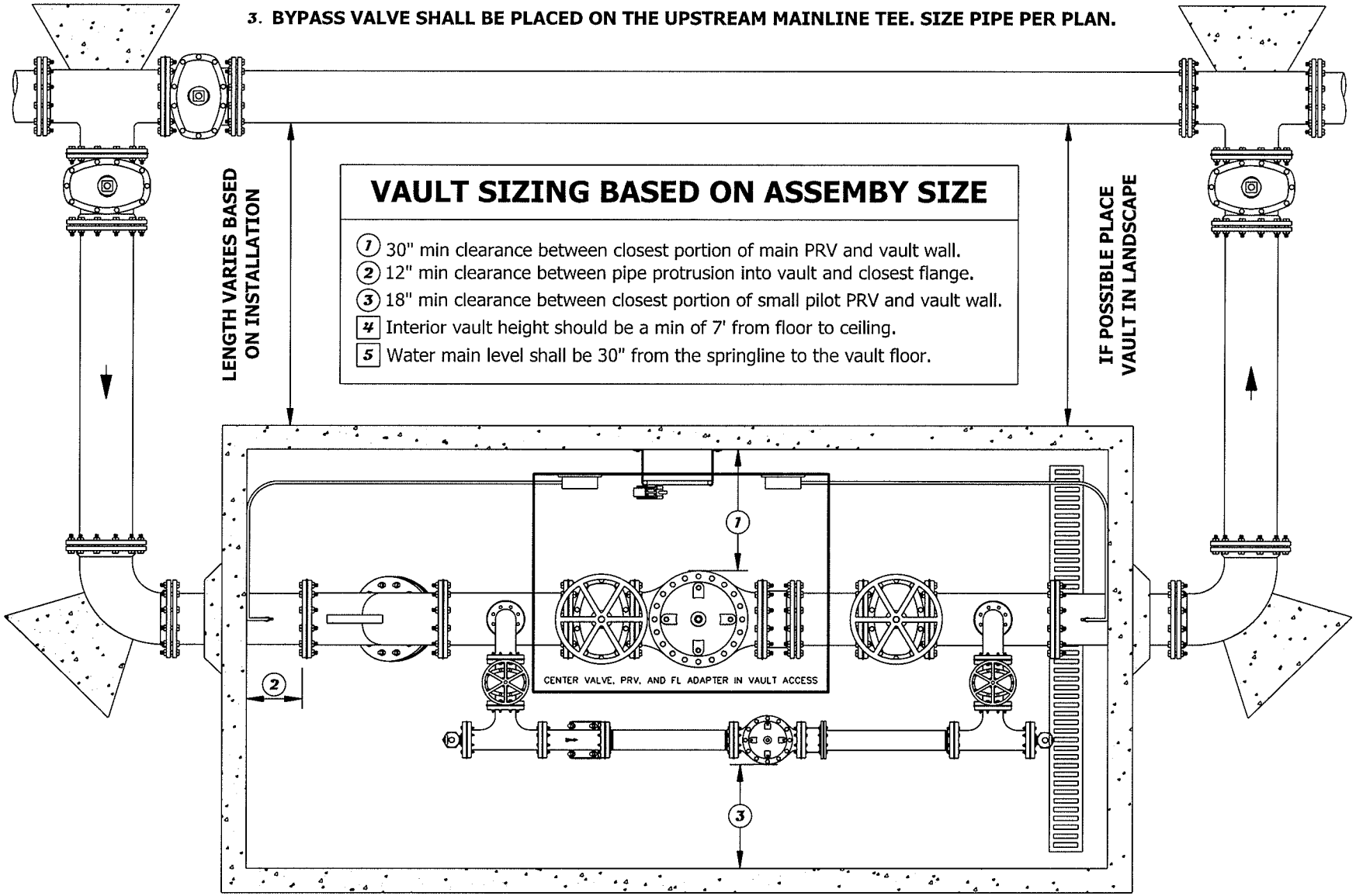

VAULT SIZING BASED ON ASSEMBY SIZE

1. 30" min clearance between closest portion of main PRV and vault wall.
2. 12" min clearance between pipe protrusion into vault and closest flange.
3. 18" min clearance between closest portion of small pilot PRV and vault wall.
4. Interior vault height should be a min of 7' from floor to ceiling.
5. Water main level shall be 30" from the springline to the vault floor.

DUVALL DESIGN STANDARDS: 2007

REVISION	BY	DATE
NEW DETAIL	DLC	03-07-12

City of Duvall

PRESSURE REDUCING STATION
PLAN VIEW

DRAWING NUMBER 2-80-004

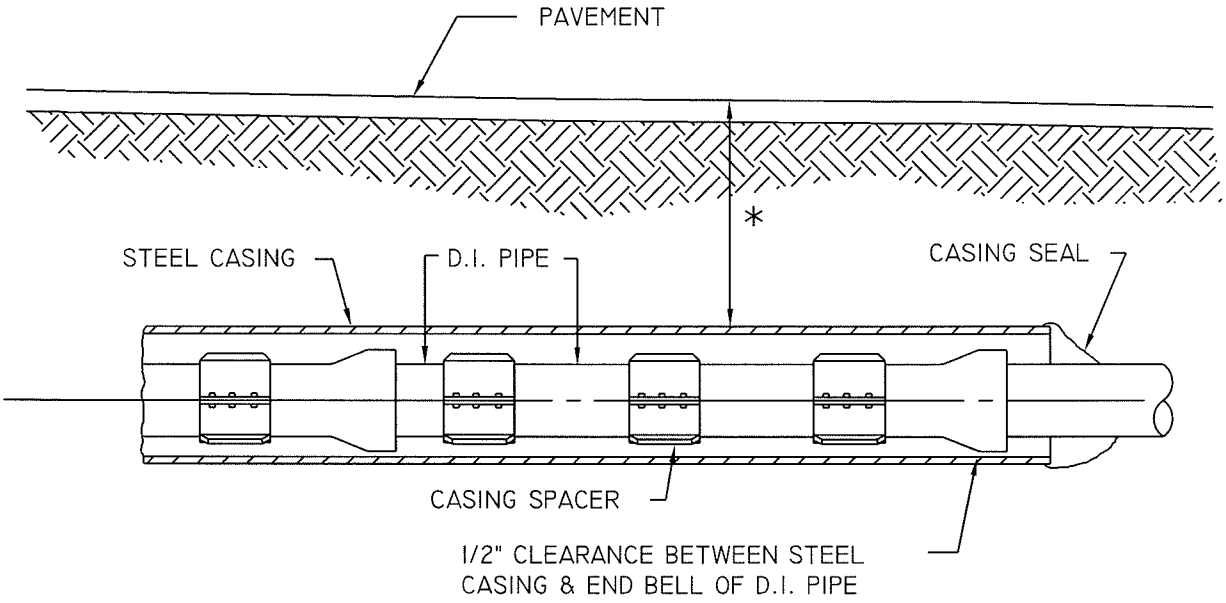

* DEPTH PER APPLICABLE CITY/COUNTY/STATE REQUIREMENTS

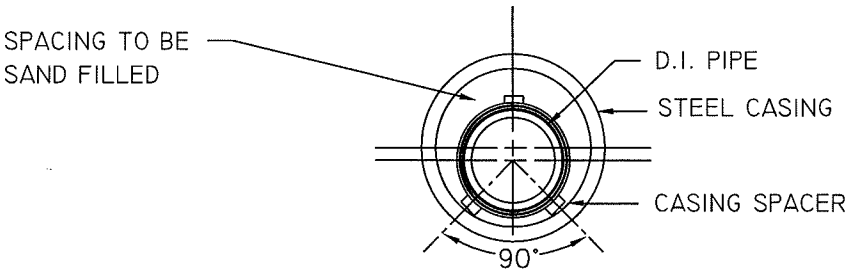

NOTES:

CASING

SIZE AND MINIMUM THICKNESS OF CASING SHALL BE AS SHOWN ON THE CONTRACT DRAWINGS. HOWEVER, THE CONTRACTOR SHALL BE RESPONSIBLE FOR SELECTING THE THICKNESS CONSISTENT WITH HIS OPERATION.

CASING SEAL

MINIMUM 3/16" THICK, SHEET TYPE SYNTHETIC RUBBER WITH STAINLESS STEEL BANDS.

City of Duvall	
PIPE CASING	REVISED 5/10/07
STANDARD PLAN	2-100-001

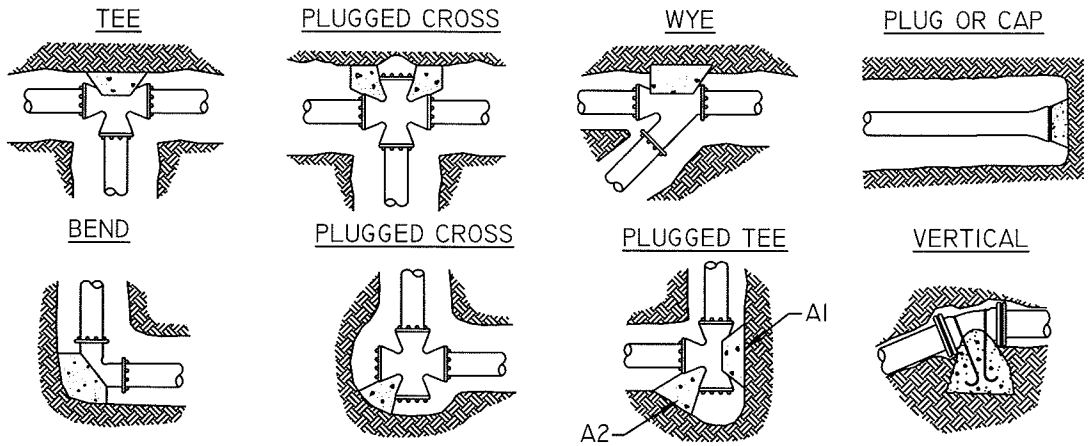

CONCRETE THRUST BLOCK SCHEDULE

BEARING AREA OF THRUST BLOCKS IN SQUARE FEET							
FITTING SIZE (INCHES)	TEE, WYE, PLUG OR CAP	90° BEND OR PLUGGED CROSS	TEE PLUGGED ON RUN BEND		45° BEND	22 1/2° BEND	11 1/4° BEND
			A1	A2			
04	1.3	1.9	2.5	1.9	1.3	1.3	1.3
06	2.8	4.0	5.7	4.0	2.1	1.3	1.3
08	5.1	7.1	10.1	7.1	3.9	2.0	1.3
10	7.9	11.2	15.7	11.2	6.1	3.2	1.6
12	11.3	16.0	22.7	16.0	8.8	4.5	2.3
14	15.3	21.7	30.7	21.7	11.9	6.1	3.1
16	20.0	28.4	40.0	28.4	15.5	8.0	4.0
18	25.3	36.0	50.7	36.0	19.5	10.1	5.1
20	31.3	44.4	62.7	44.4	24.1	12.5	6.3
24	45.3	64.0	90.7	64.0	34.9	18.1	9.1

VERTICAL VOLUME OF THRUST BLOCK IN CUBIC YARDS			
FITTING SIZE	45° BEND	22 1/2° BEND	11 1/4° BEND
4"	1.1	0.4	0.2
6"	2.7	1.0	0.4
8"	4.0	1.5	0.6
12"	8.5	3.2	1.3
16"	14.8	5.6	2.3

VERTICAL BEND		
FITTING SIZE	ROD SIZE	EMBEDMENT BEND
4" - 12"	#6	30
14" - 16"	#8	36

ABOVE BEARING AREAS BASED ON TEST PRESSURE OF 150 PSI AND AN ALLOWABLE SOIL BEARING STRENGTH OF 1,500 POUNDS PER SQUARE FOOT. TO COMPUTE BEARING AREAS FOR DIFFERENT TEST PRESSURES AND SOIL BEARING STRESSES, USE THE FOLLOWING EQUATION:
BEARING AREA = (TEST PRESSURE / 150) X (1,500 / SOIL BEARING STRESS) X (TABLE VALUE)

NOTES:

1. CONCRETE THRUST BLOCKING TO BE POURED AGAINST UNDISTURBED EARTH.
2. KEEP CONCRETE CLEAR OF JOINT AND ACCESSORIES. INSTALL 12 MIL TOTAL THICKNESS POLYETHYLENE SHEET AROUND FITTING. SECURE SHEET ENDS TO PREVENT INFILTRATION OF DIRT BETWEEN SHEET AND PIPE FITTING PRIOR TO POURING THRUST BLOCKING. PROTECT MECHANICAL JOINT FOLLOWERS AND BOLTS FROM CONCRETE WITH TEMPORARY FORMS AND 12 MIL POLYETHYLENE SHEETING.
3. THE REQUIRED THRUST BEARING AREAS FOR SPECIAL CONNECTIONS ARE SHOWN.
4. IF NOT SHOWN ON PLANS, REQUIRED BEARING AREAS AT FITTING SHALL BE AS INDICATED ABOVE, ADJUST IF NECESSARY, TO CONFORM TO THE TEST PRESSURE(S) AND ALLOWABLE SOIL BEARING STRESS(ES) STATED IN THE SPECIAL SPECIFICATIONS.
5. BEARING AREAS AND SPECIAL BLOCKING DETAILS SHOWN ON PLANS TAKE PRECEDENCE OVER BEARING AREAS AND BLOCKING DETAILS SHOWN ON THIS STANDARD DWG. BEARING AREA OF THRUST BLOCKS IS IN SQUARE FEET.
6. VERTICAL CHANGES IN DIRECTION REQUIRE SPECIFIC DESIGNS FOR THRUST BLOCKS.
7. CONCRETE MUST BE READY MIX MINIMUM 2,500 PSI MIX.
8. ALL BLOCKS TO HAVE A MINIMUM 12" THICKNESS (DIMENSION NOT SHOWN).

City of Duvall

THRUST BLOCK TABLE

REVISED 5/10/07

STANDARD PLAN

2-130-002

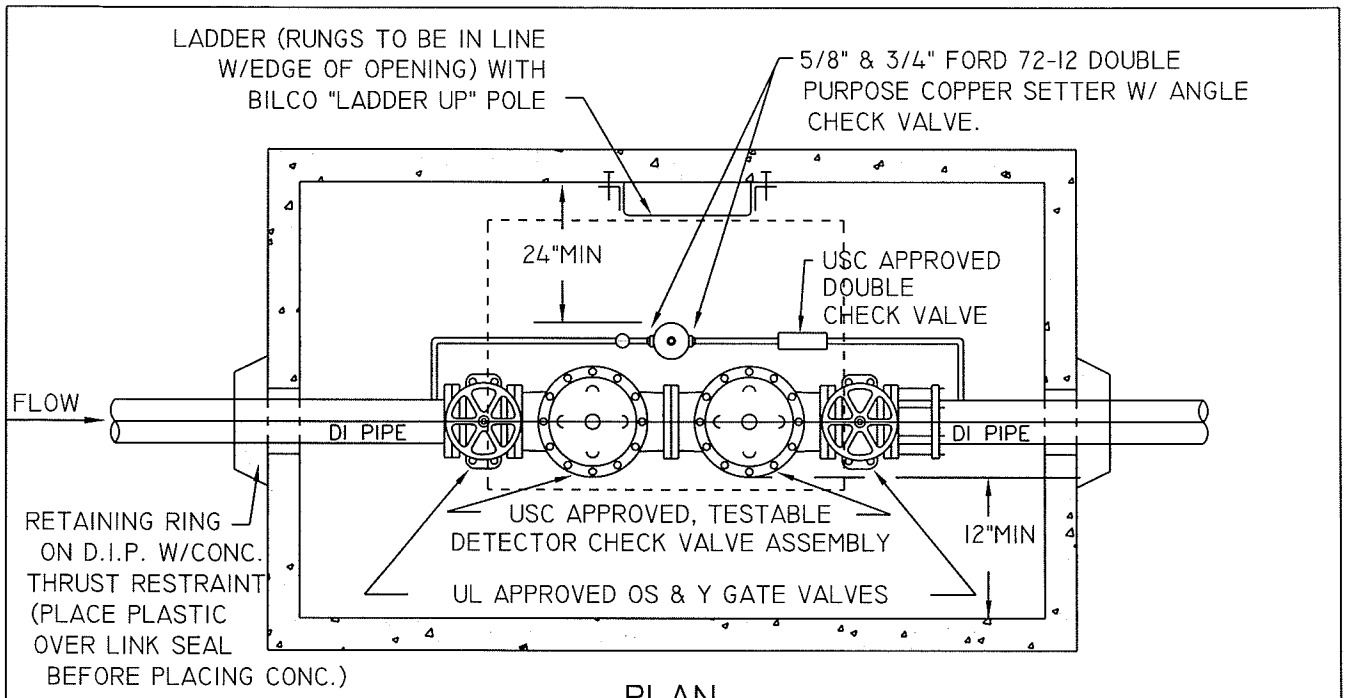

PLAN
N.T.S.

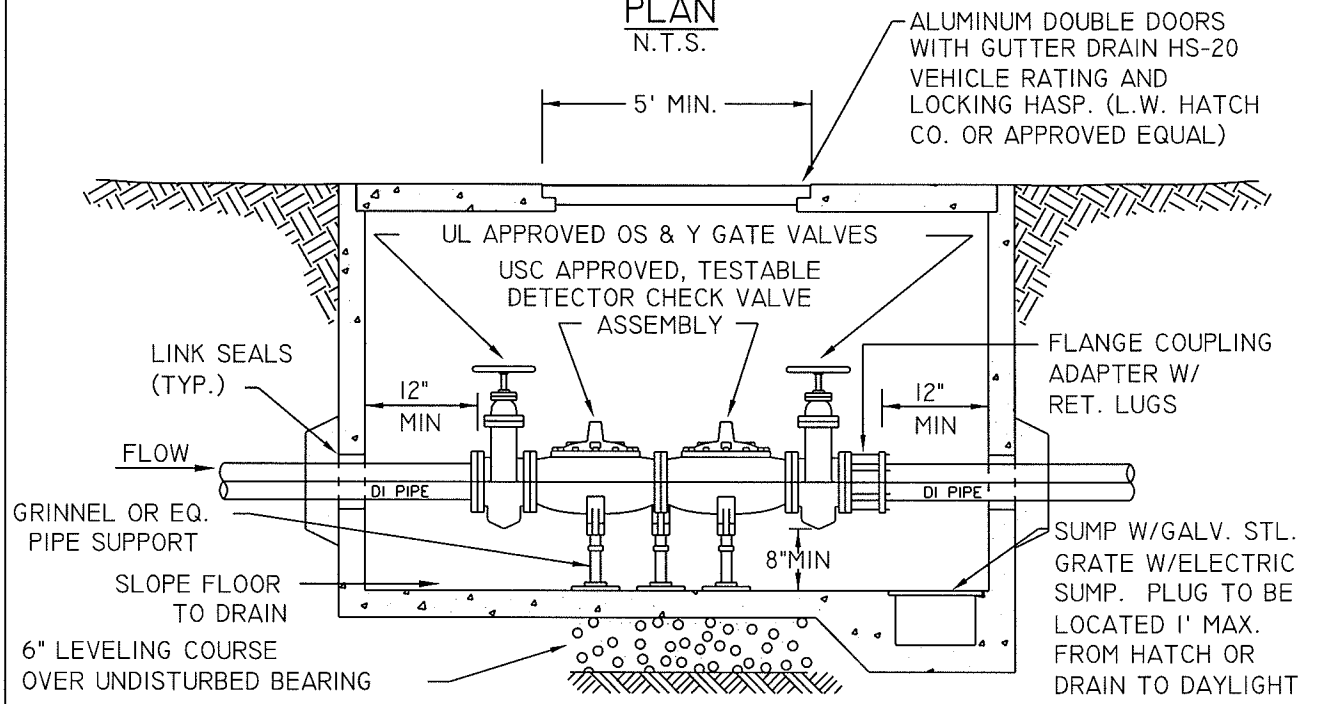

SECTION
N.T.S.

NOTES

1. 5/8" METER TO BE SUPPLIED BY CITY.
2. COVER SHALL EXTEND 6" ABOVE GRADE WHEN VAULT IS NOT IN TRAFFIC AREA AND SHALL BE FLUSH IN TRAFFIC AREA.
3. SLOPE PAVEMENT AWAY FROM COVER WHEN VAULT IS IN TRAFFIC AREA.
4. ALL BYPASSES TO BE SADDLED AND NOT DIRECT-TAPPED.

City of Duvall

DOUBLE DETECTOR CHECK VALVE	REVISED 5/10/07
STANDARD PLAN	2-153-001

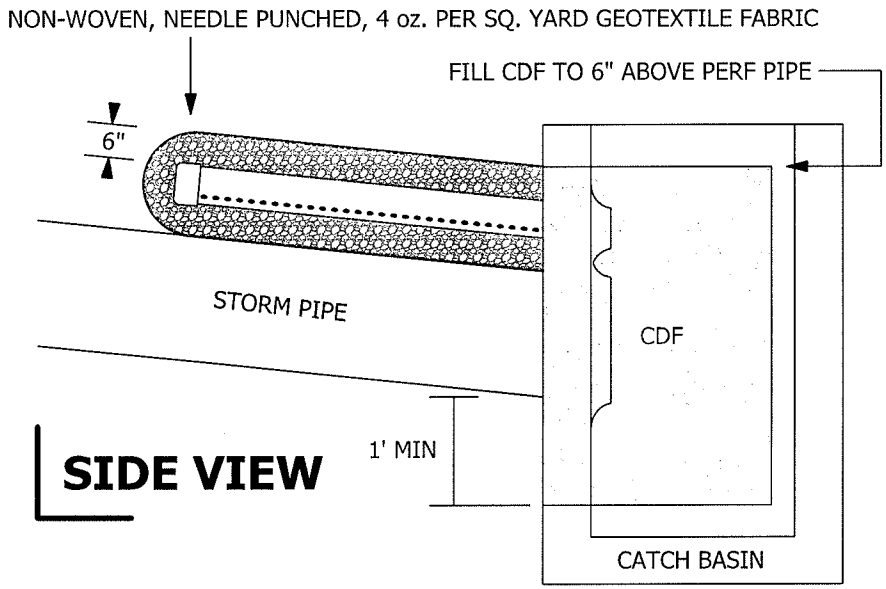

SIDE VIEW

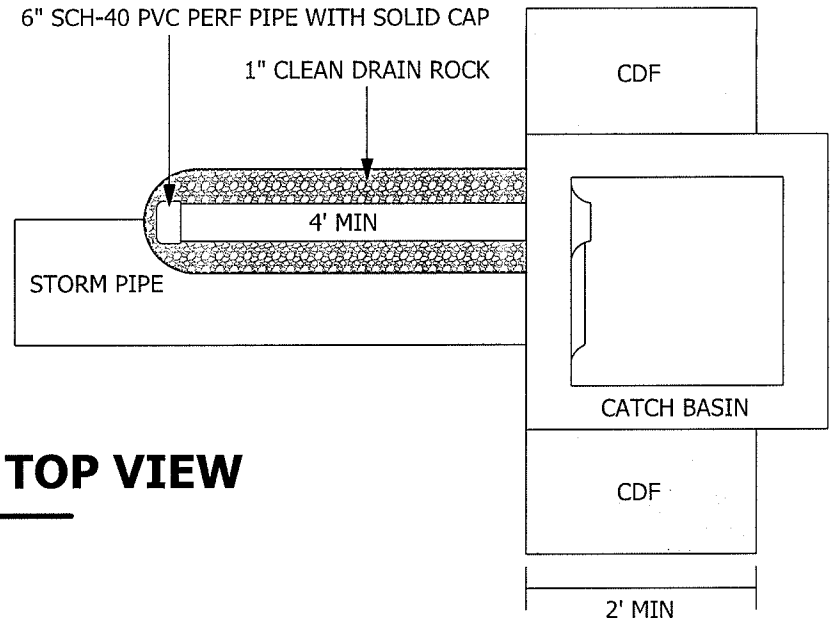

TOP VIEW

NOTES:

TRENCH DAMS SHALL CONSIST OF CDF (CONTROLLED DENSITY FILL) OR AN APPROVED EQUIVALENT. EACH TRENCH DAM SHALL BE NOTCHED AT LEAST 12 INCHES INTO THE BASE AND SIDES OF THE TRENCH TO KEY THE BARRIER INTO THE NATIVE SOILS. CARE MUST BE TAKEN DURING BARRIER CONSTRUCTION TO AVOID PIPE DAMAGE. IT IS RECOMMENDED THAT THE TRENCH DAMS BE INSTALLED IN CONJUNCTION WITH THE STORM PIPE AND CBS's.

THE BARRIERS SHALL EXTEND FROM THE BASE OF THE KEYED TRENCH TO A DISTANCE OF AT LEAST 6" ABOVE THE PERF PIPE MEASURED AT THE CATCH BASIN. CDF SHALL BE POURED DIRECTLY UP AGAINST A CLEAN TYPE I OR TYPE 2 CATCH BASIN.

THE EXACT LOCATIONS SHALL BE FIELD FIT BY THE CONTRACTOR AND APPROVED BY THE CITY INSPECTOR OR ENGINEER. IT IS THE CONTRACTORS RESPONSIBILITY TO AS-BUILT TRENCH DAM LOCATIONS.

PIPE SLOPE DETERMINES THE NEED FOR TRENCH DAMS:

PIPE SLOPE:	TRENCH DAM SPACING:
0-7%	NONE
7-10%	EVERY 200'
10-15%	EVERY 150'
15-20%	EVERY 100'
20% AND GREATER	CONSULT THE ENGINEER

City of Duvall

INLINE TRENCH DAM	REVISED 1/8/10 DC
STANDARD PLAN	3-01-012

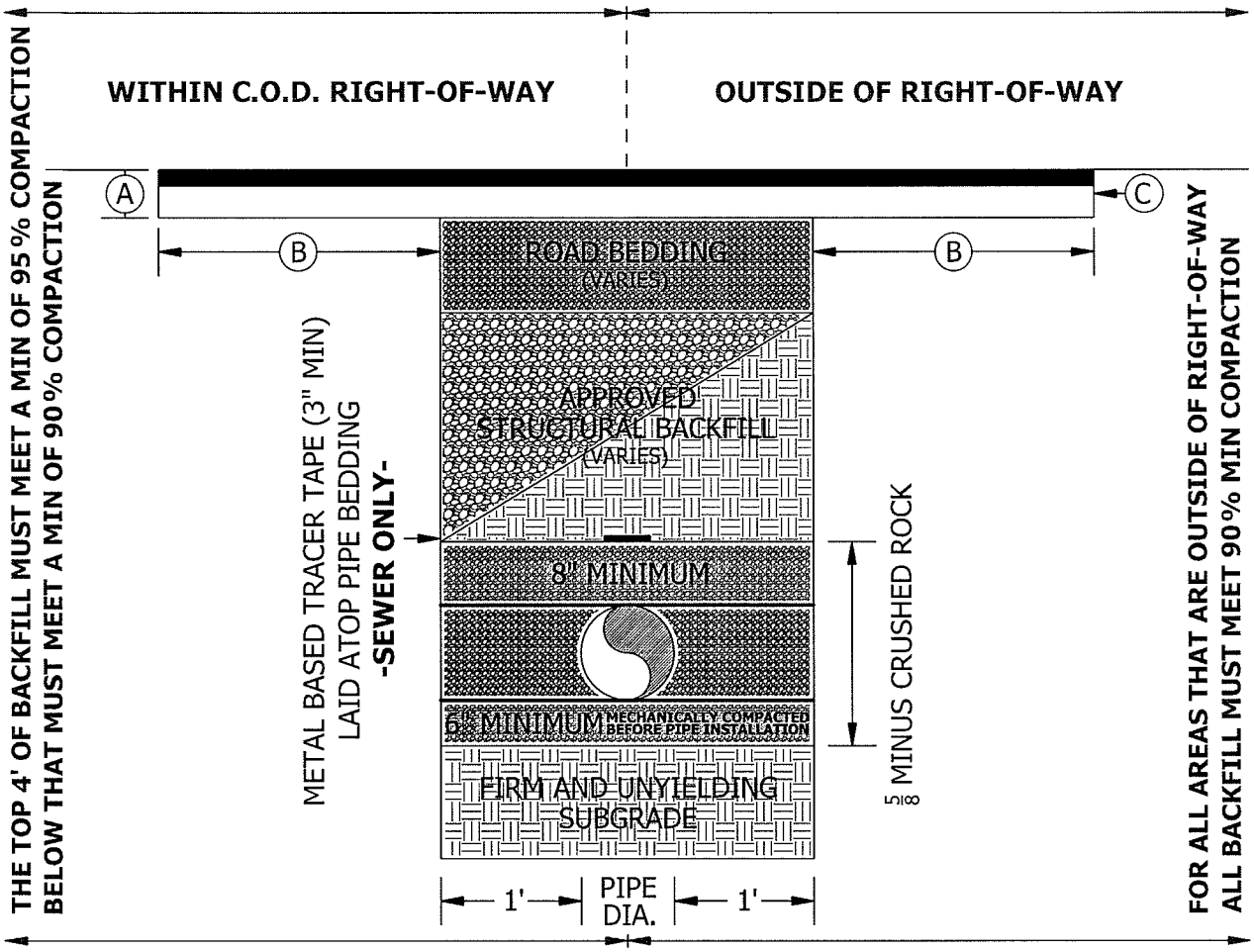

(A) PERMANENT ASPHALT TRENCH PATCH TO BE THE THICKNESS OF THE EXISTING ASPHALT + 1" OR A TOTAL OF 3", WHICHEVER IS GREATER UNLESS OTHERWISE APPROVED BY THE INSPECTOR.

(B) 3' TYPICAL "T-CUT". "T-CUT" MUST BE SQUARE IN SHAPE AND CONTAIN ONLY 90° ANGLES UNLESS OTHERWISE APPROVED. "T-CUTTING" MAY BE DONE BEFORE OR AFTER EXCAVATION. HOWEVER, IF THE SAWCUT ASPHALT EDGES BECOME BROKEN DURING CONSTRUCTION ANOTHER CUT WILL BE REQUIRED PRIOR TO PAVING.

(C) CUT EDGES OF ASPHALT SHALL BE CLEAN, STRAIGHT AND SQUARE BEFORE PAVING. ASPHALT EMULSION TACK SHALL BE APPLIED TO THE CLEAN CUT EDGES JUST PRIOR TO PAVING. LIQUID RUBBERIZED TAR SHALL BE APPLIED AND BROOMED TO ALL SEAMS AFTER PAVING ACTIVITIES. SAND SHALL BE APPLIED TO THE LIQUID TAR AFTER BROOMING. SPECIFICATIONS ON THE ASPHALT EMULSION AND LIQUID TAR CAN BE FOUND IN THE CURRENT WSDOT MANUAL.

DUVALL DESIGN STANDARDS: 2007			City of Duvall	PIPE BEDDING, TRENCH SECTION & ASPHALT PATCHING
REVISION	BY	DATE		
COMPLETE UPDATE	DLC	01-25-10		DRAWING NUMBER 5-01-007

E:\Public Works\Development Guidelines\DDS Manual\2009 Update\Details\DWG\5-01-007 Trench Profile.dwg

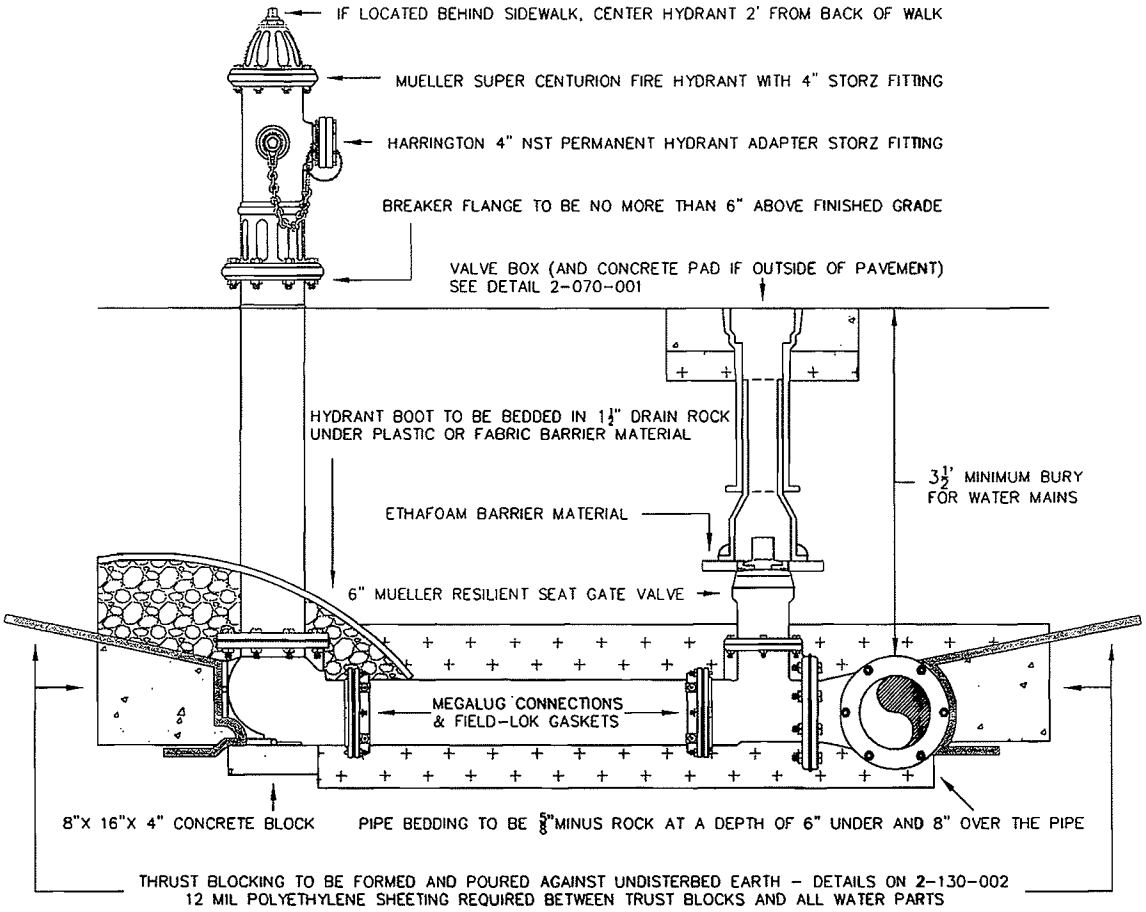

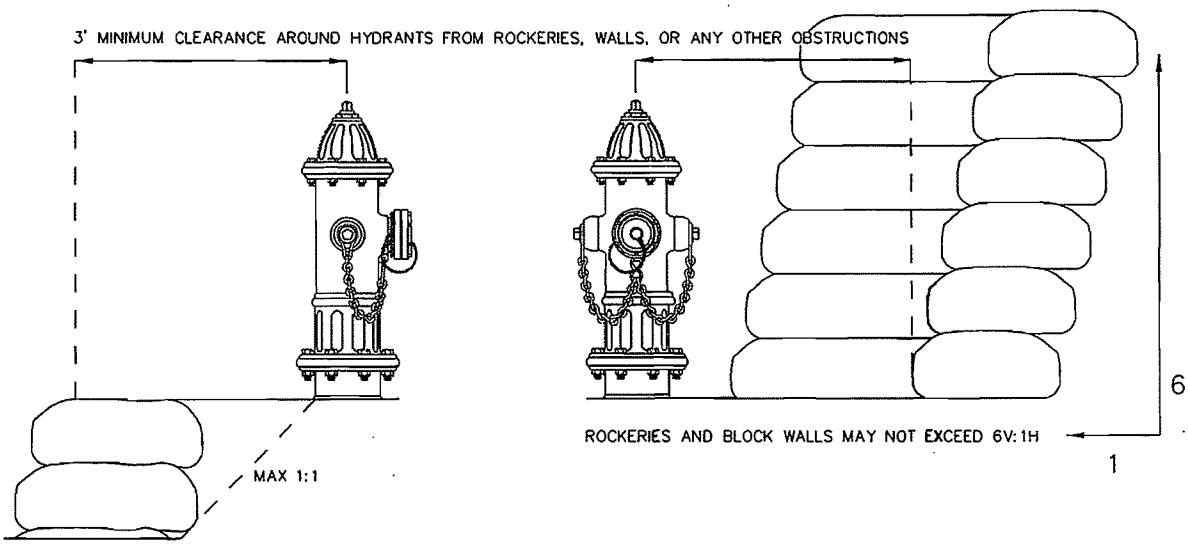

NOTES:

PAINT HYDRANT WITH TWO COATS OF QUICK-SET ENAMEL YELLOW HYDRANT PAINT, FAR WEST PAINT COMPANY # 403472.

STENCIL DISTANCE FROM THE VALVE TO THE MARKER (TO THE NEAREST FOOT) IN 2" BLACK NUMBERS DIRECTLY INLINE WITH THE FOOT VALVE.

WHEN HYDRANT IS LOCATED BEHIND A DITCH, INSTALL A CULVERT FOR ACCESS TO HYDRANT. SEE INSPECTOR FOR SIZE AND MATERIALS.

PLACE BLUE RETRO-REFLECTIVE TURTLE IN THE CENTER OF ROADWAY ADJACENT TO FIRE HYDRANT.

City of Duvall

FIRE HYDRANT INSTALLATION	REVISED 8/26/08
STANDARD PLAN	2-060-001

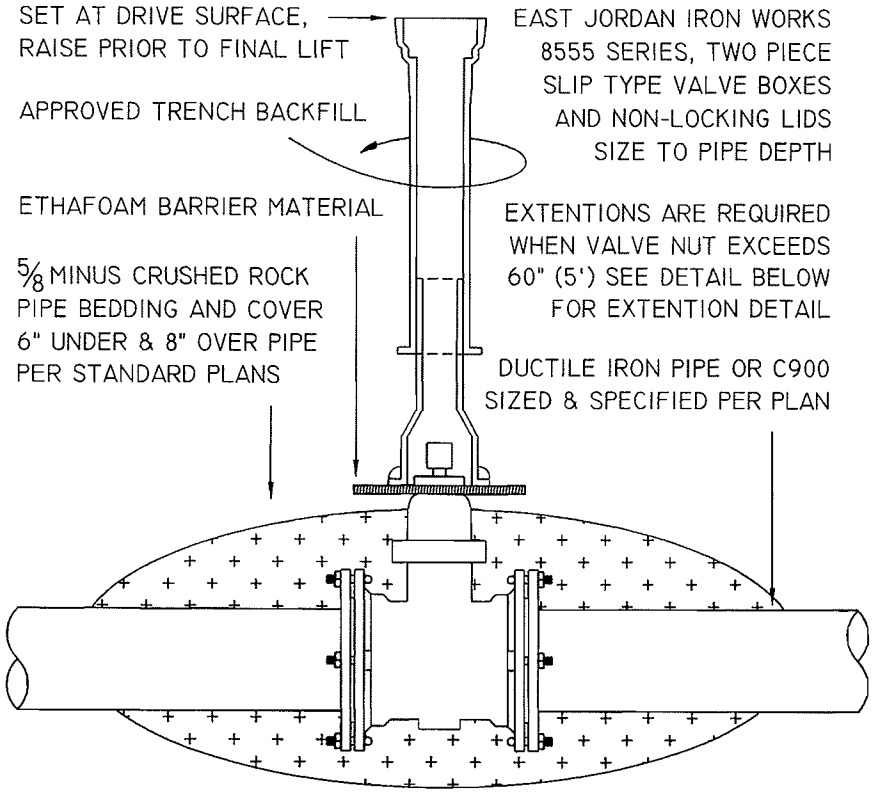

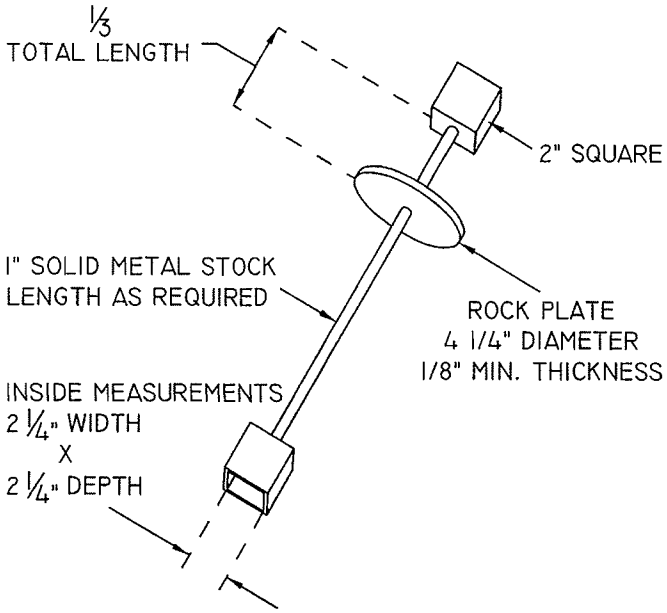

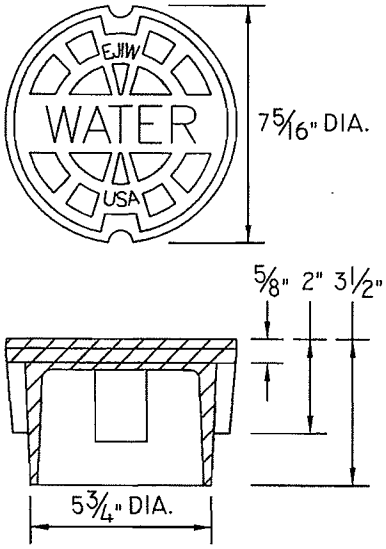

ALL EXTENSIONS ARE TO BE MADE OF STEEL. SIZE TO ALLOW VALVE OPERATION WITHIN 60" (5') OF SURFACE. EXTENTIONS ARE TO BE A MINIMUM OF 12" LONG. ONLY ONE EXTENTION MAY BE USED PER VALVE ASSEMBLY. PAINT ENTIRE ASSEMBLY WITH TWO COATS OF ATCO # 222 CARBON ELASTIC

City of Duvall

VALVE BOX AND EXTENSION DETAIL	REVISED 7/15/08
STANDARD PLAN	2-070-001

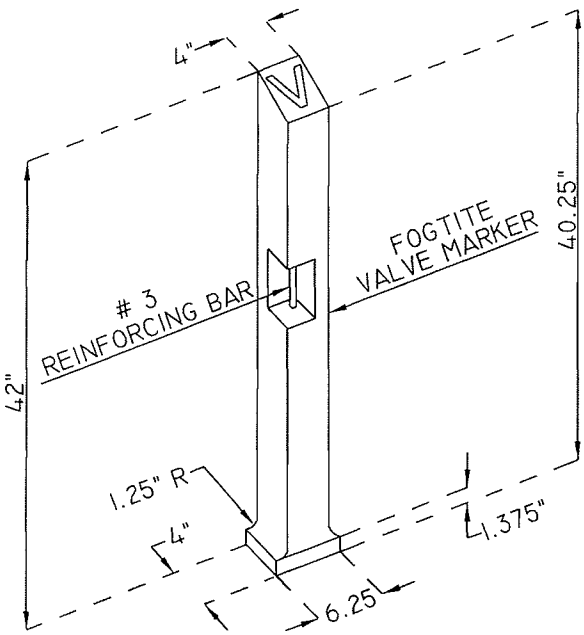

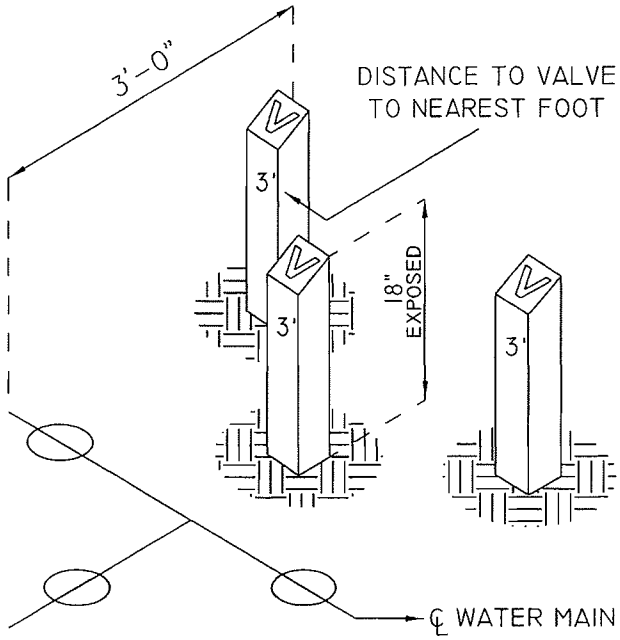

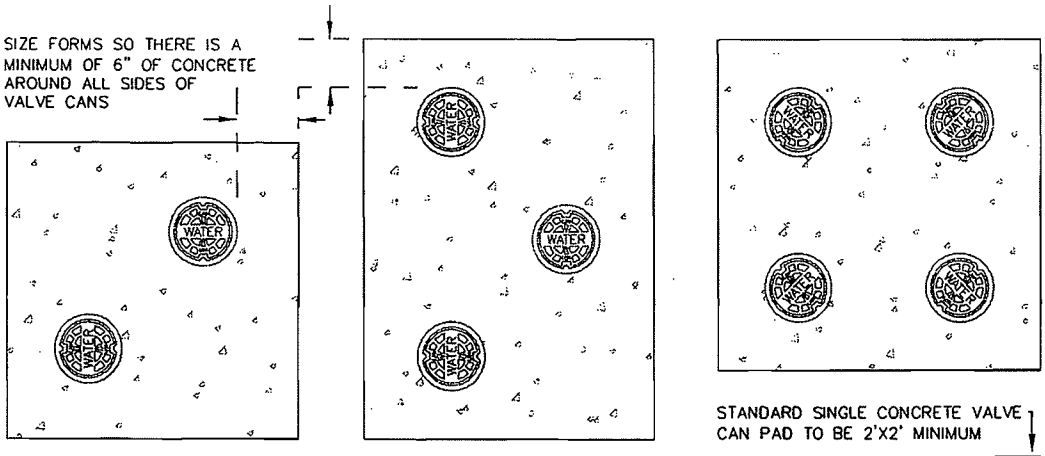

STANDARD SINGLE CONCRETE VALVE CAN PAD TO BE 2'X2' MINIMUM

NOTES:

VALVE MARKER POSTS AND CONCRETE PADS AROUND VALVE CANS ARE REQUIRED ANYTIME VALVE CANS ARE LOCATED IN A NON-PAVED AREA.

VALVE MARKER POST SHALL BE FROM FOGTITE INC. USE ONE VALVE MARKER POST PER VALVE.

THE POST SHALL BE SET AT RIGHT ANGLES TO THE ROADWAY FROM THE VALVE AND SHALL BE SITUATED IN A SAFE AND REASONABLY CONSPICUOUS LOCATION.

PAINT VALVE MARKERS WITH TWO COATS OF QUICKSET ENAMEL YELLOW HYDRANT PAINT, FAR WEST PAINT COMPANY # 403472.

STENCIL DISTANCE FROM THE VALVE TO THE MARKER (TO THE NEAREST FOOT) IN 2" BLACK NUMBERS.

VALVE CANS LOCATED IN NON-PAVED AREAS MUST HAVE A 2' X 2' CONCRETE PAD POURED AROUND THEM. FOR VALVE CLUSTERS FORM AS DETAILED ABOVE AND SIZE FORMS SO A MINIMUM OF 6" OF CONCRETE IS AROUND ALL VALVE CANS. NO EARTH FORMING ALLOWED. CONCRETE PAD TO BE 4" THICK OVER 6" OF COMPACTED $\frac{5}{8}$" MINUS CRUSHED ROCK.

VALVE CANS FOR BUTTERFLY VALVES TO BE LOCATED ON THE NORTH AND EAST SIDES OF THE MAIN.

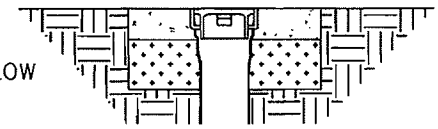

PROFILE OF STANDARD SINGLE CONCRETE VALVE CAN PAD

City of Duvall	
VALVE MARKER DETAILS	REVISED 10/15/08
STANDARD PLAN	2-07-002

PAINT STAND PIPE WITH TWO COATS OF QUICKSET ENAMEL YELLOW HYDRANT PAINT, FAR WEST PAINT COMPANY # 403472.
(SAME COLOR AS HYDRANTS AND VALVE MARKERS)

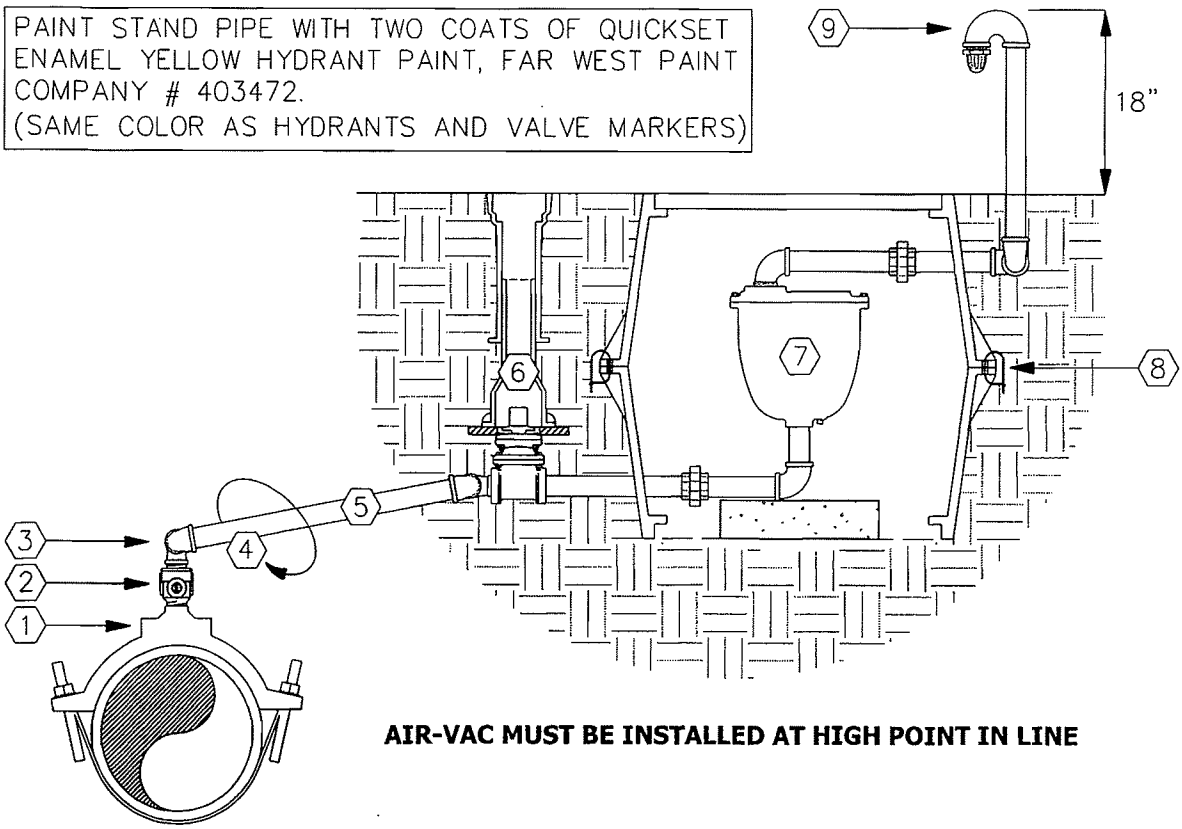

AIR-VAC MUST BE INSTALLED AT HIGH POINT IN LINE

NOTES:

1. SADDLE SHALL BE EITHER FORD FC202 OR ROMAC 202NS PLACED SO OUTLET IS UP
2. FORD FB400 OR MUELLER 300 BALLCORP VALVES (AWWA/CC TAPER THREAD INLET BY IRON PIPE THREAD OUTLET)
3. (1) DOUBLE FEMALE 90 & (1) STREET 90 TO CREATE A FULLY SWIVELING JOINT.
4. PIPE BED ZONE SHALL BE 3" OF SAND ALL AROUND PIPE
5. ALL PIPES & FITTING UNDER AIR-VAC VALVE SHALL BE 2" BRASS. EVERYTHING ABOVE MAY BE 2" GALVANIZED STEEL. AIR-VAC LINE SHALL HAVE A MINIMUM OF 2% SLOPE UPHILL TOWARD THE AIR-VAC VALVE TO ALLOW PURGING OF AIR.
6. 2" MUELLER RESILIENT WEDGE (N.R.S.) GATE VALVE WITH I.P.S. THREADED ENDS. PLACE GATE VALVE AS CLOSE TO BOX AS PRACTICAL. SEE DRAWING 2-070-001 FOR VALVE BOX DETAILS AND INFORMATION. NO CONCRETE PAD IS REQUIRED AROUND VALVE BOX IF IT IS PLACED NEXT TO BOX.
7. APCO 145C COMBINATION AIR VALVE (AIR-VAC). AIR-VAC IS CONNECTED IN LINE WITH A UNION AT EITHER SIDE AS SHOWN. USE A 2" STREET 90 DIRECTLY INTO TOP OF VALVE AND A DOUBLE FEMALE 90 BELOW. ADJUST HEIGHT WITH NIPPLE LENGTH BELOW VALVE. PLACE WEIGHT OF ASSEMBLY ON 8"X 16"X 4"CONCRETE BLOCK. INSULATE WITH FIBERGLASS INSULATION TO TOP OF AIR-VAC.
8. BOXES SHALL BE CARSON 1730 HDPE (SHOWN) FOR USE OUT OF THE TRAVEL LANE. USE NYLON ZIP-TIES TO CONNECT THE BOTTOM OF THE BOXES TOGETHER. FOR APPLICATIONS IN A PAVED AREA USE MID-STATES 1730-R HDPE TRAFFIC RATED BOXES WITH DUCTILE IRON LIDS. STACK TWO BOXES IN THE CONVENTIONAL MANNER. BOXES TO BE LOCATED IN LANDSCAPE STRIP UNLESS OTHERWISE APPROVED.
9. RETURN BEND WITH BEEHIVE STRAINER

City of Duvall

2" AIR AND VACUUM VALVE	REVISED 1/08/10 DC
STANDARD PLAN	2-070-003

'HOT TAP'

MAY BE USED ANYTIME THE BRANCH SIZE IS SMALLER THAN THE MAIN SIZE
SAME SIZE TAPS MAY BE PERFORMED ON DUCTILE IRON PIPE ONLY

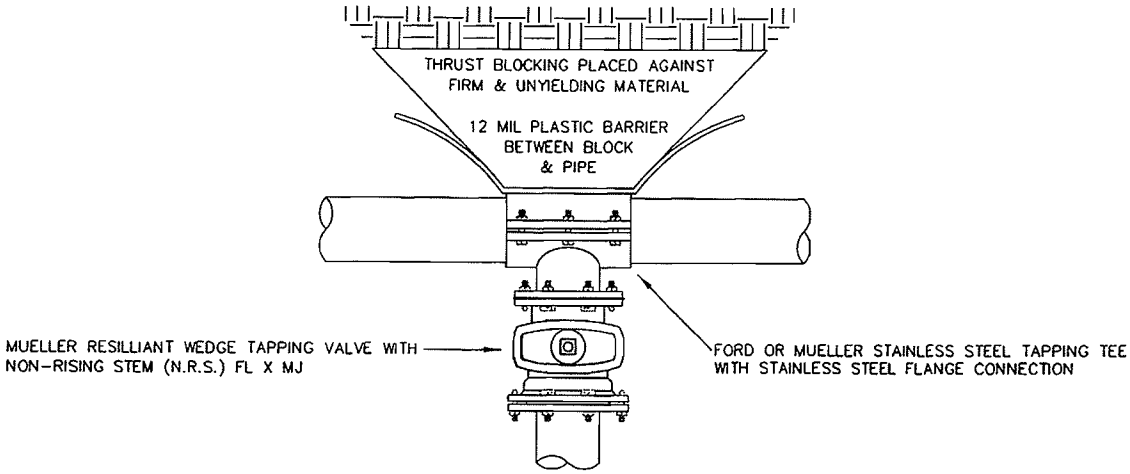

'CUT-IN'

MUST BE USED WHEN EXISTING WATER MAIN IS MADE FROM A/C, C-900, OR PVC PIPE
AND THE NEW BRANCH MUST BE THE SAME SIZE

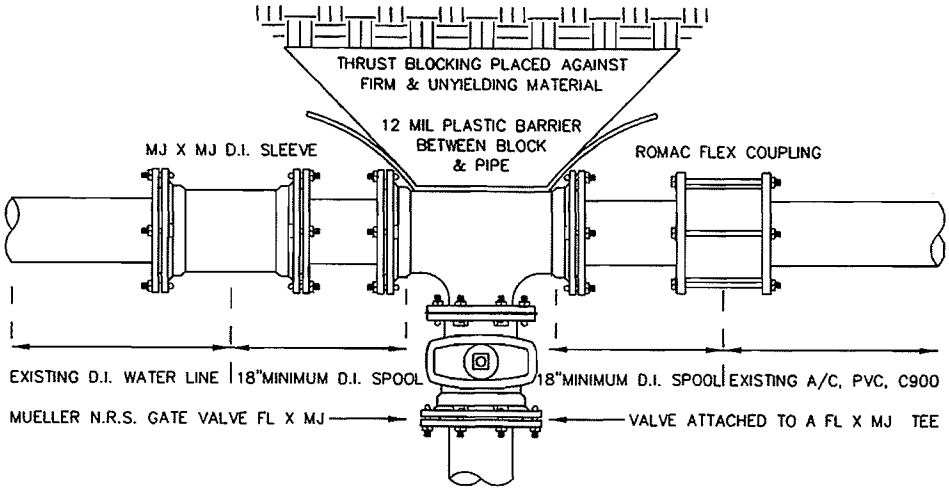

NOTES:

ALL CONNECTIONS TO BE MADE WITH THE CITY INSPECTOR PRESENT.

WHEN 'HOT TAPPING' SUPPORT WEIGHT OF VALVE BY PLACING A CONCRETE BLOCK UNDER THE VALVE BEFORE TIGHTENING THE TAPPING TEE.

'CUT-IN'S REQUIRING WATER MAIN SHUTDOWN ARE REQUIRED TO HAVE A MINIMUM OF 3 DAYS NOTICE TO ALL EFFECTED CUSTOMERS IN WRITING AND APPROVED BY THE CITY OF DUVALL. TO BE CONSIDERED ONE FULL DAY SHUT OFF NOTICES MUST BE DELIVERED BEFORE 12:00 PM. DO NOT COUNT WEEKEND DAYS.

ALL PIPE AND FITTINGS TO BE SWABBED WITH A CL_2 SOLUTION OF AT LEAST 50 PPM.

CONTRACTOR MAY NOT OPERATE CITY WATER VALVES UNLESS GIVEN CONSENT BY THE CITY INSPECTOR OR DURING AN EMERGENCY.

City of Duvall

CUT-INS AND HOT TAPPING	REVISED 8/25/08
STANDARD PLAN	2-070-004

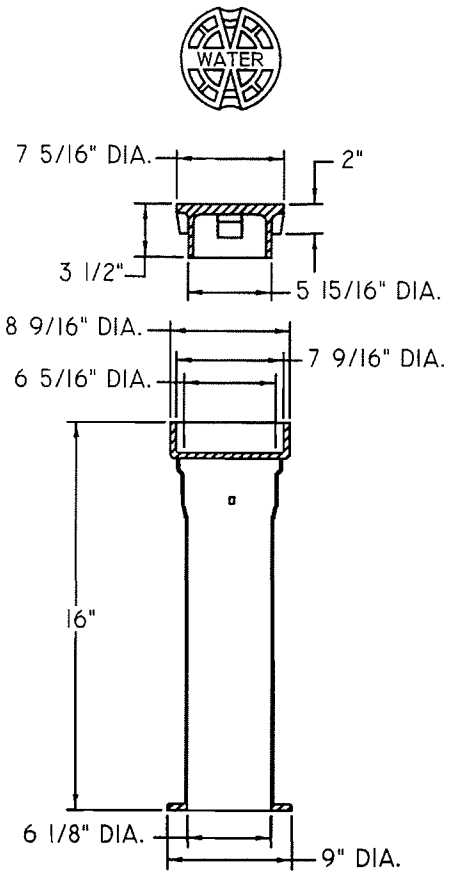

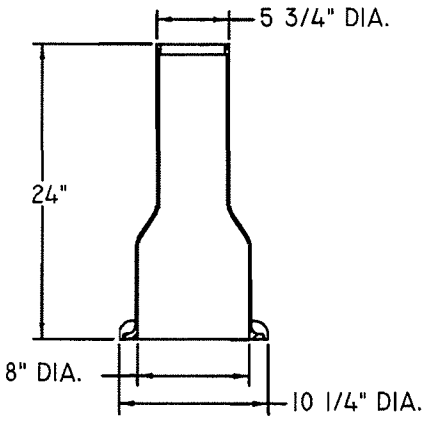

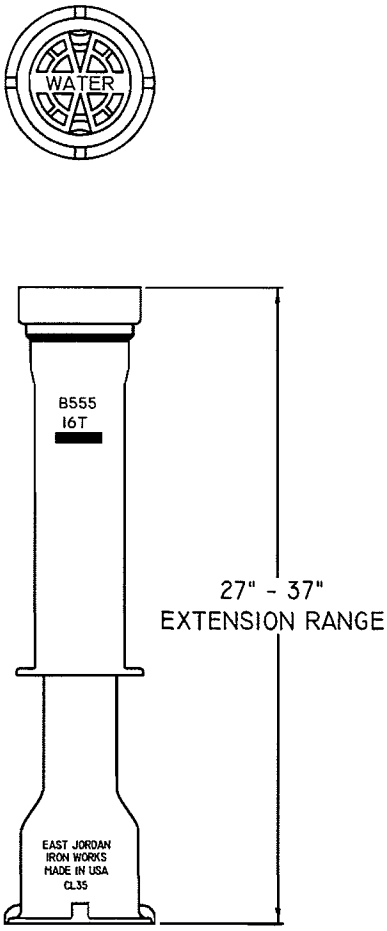

VIEW OF ASSEMBL4ED COMPONENTS
TO BE ASSEMBLED ON JOB SITE

NOTES:
1. VALVE BOX AND RISERS SHALL BE MANUFACTURED IN THE UNITED STATES OF AMERICA.
2. MATERIAL IS DUCTILE IRON ASTM A48 CL35.
3. EAST JORDAN IRON WORKS MANUFACTURING CO. PRODUCT NO. 85552737.

City of Duvall

VALVE BOX AND RISERS	REVISED 5/10/07
STANDARD PLAN	2-080-001

City of Duvall

INTENTIONALLY LEFT VACANT	REVISED 5/10/07
STANDARD PLAN	2-080-002

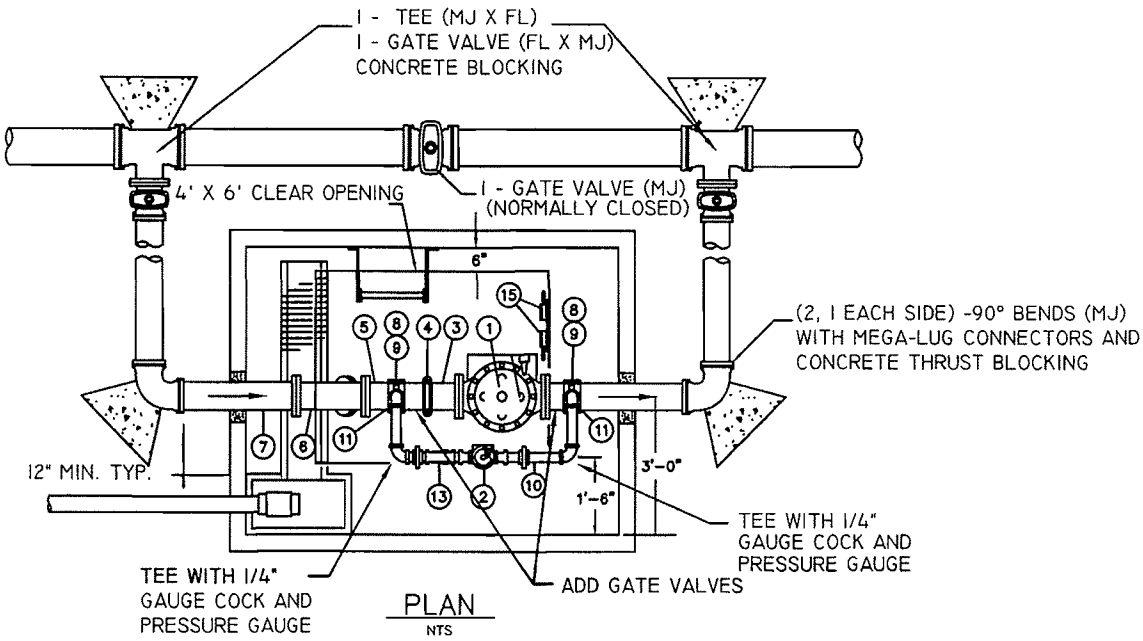

PLAN
NTS

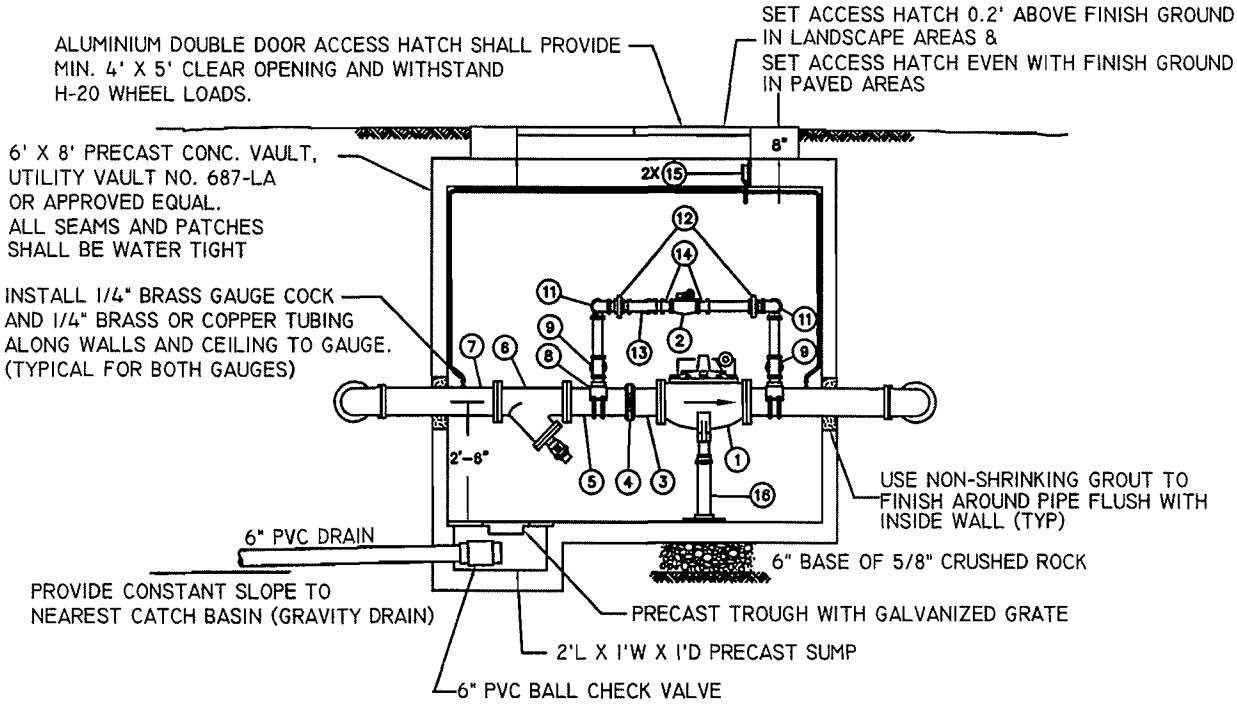

ELEVATION
NTS

City of Duvall

PRESSURE REDUCING STATION	REVISED 5/10/07
STANDARD PLAN	2-080-003

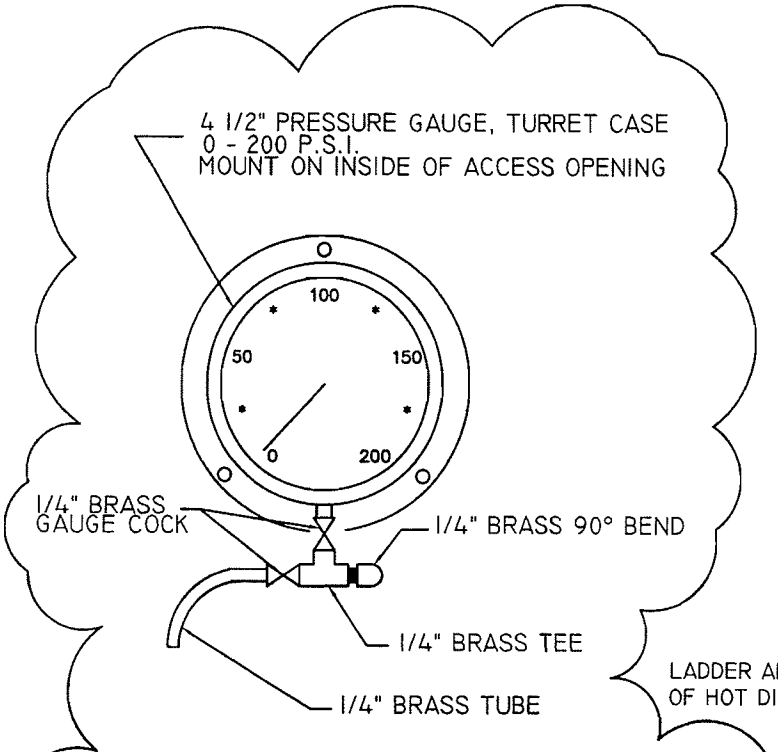

DRILL AND TAP A 1/4" HOLE IN __ D.I. PIPE FOR INSTALLATION.

GAUGE ASSEMBLY
N.T.S.

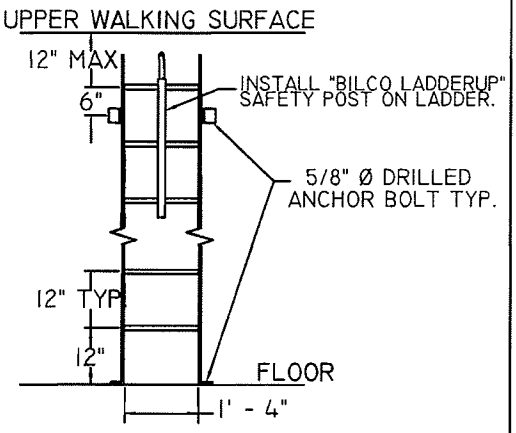

LADDER AND MOUNTING BOLTS SHALL BE CONSTRUCTED OF HOT DIPPED GALVANIZED STEEL.

LADDER DETAIL
N.T.S.

MATERIALS LIST

1. ___ PRESSURE REDUCING VALVE (CLA-VAL)
2. ___ PRESSURE REDUCING VALVE (CLA-VAL)
3. 8" OF __" D.I. (FL X GROOVE)
4. VICTUALIC COUPLING OR EQUAL
5. 16" OF ___ D.I. (FL X GROOVE)
6. ___ WYE STRAINER (FL), 1/8" DIAM. SCREEN, WITH 2" CORP STOP ON DRAIN
7. ___ D.I. PIPE (FL X PE)
8. ___ I.P. SERVICE SADDLE WITH DOUBLE STAINLESS STEEL STRAPS
9. ___ BRASS GATE VALVE
10. ___ PIPE
11. ___ 90° BEND
12. ___ UNION
13. ___ WYE STRAINER WITH 20 MESH SCREEN
14. _____ REDUCER
15. GAUGE ASSEMBLY
16. ADJUSTABLE PIPE SUPPORT
17. __ TEE
18. __ 1/4" GAUGE COCK AND PRESSURE GAUGE

*ALL PIPE AND FITTINGS 3" DIA. AND SMALLER SHALL BE BRASS UNLESS NOTED OTHERWISE.
**NO GALVANIZED PIPE SHALL BE ALLOWED.

City of Duvall

PRESSURE REDUCING STATION NOTES	REVISED 5/10/07
STANDARD PLAN	2-080-004

NON-TRAFFIC BEARING METER BOXES: BLACK CARSON BOX WITH FLUSH MOUNT LID AND READER
SINGLE: CARSON 1419 DOUBLE: CARSON 1730

TRAFFIC BEARING METER BOXES: MID-STATES BOX WITH DUCTILE IRON LID AND READER
SINGLE: MID-STATES 1118-R DOUBLE: MID-STATES 1730-R

IRRIGATION METER BOXES: GREEN CARSON BOX WITH GREEN SOLID T-COVER LID
SINGLE: CARSON 1419 DOUBLE: CARSON 1730

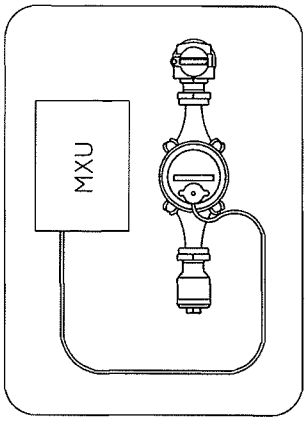

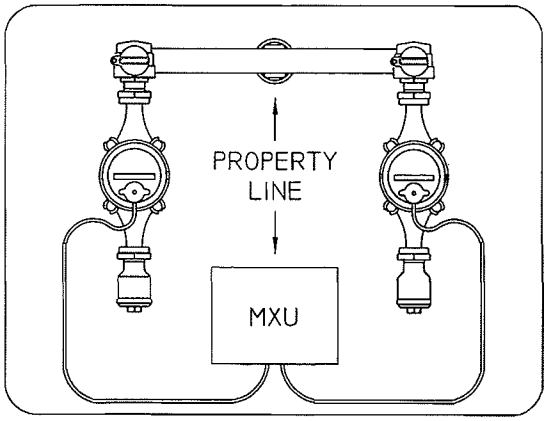

BACKFILL WITH TOPSOIL
TO 2" ABOVE METER LID

INSTALL 12" FROM SIDEWALK
OR 6' FROM CURB

HIGH DENSITY POLY-ETHELENE PIPE
I.P.S. PRESSURE CLASS 200
SIZE ACCORDING TO PLAN
WRAP WITH 10 GA SOLID LOCATOR WIRE

3' MINIMUM COVER FOR SERVICE LINES

PIPE BED ZONE SHALL BE 3" OF SAND
ALL AROUND PIPE

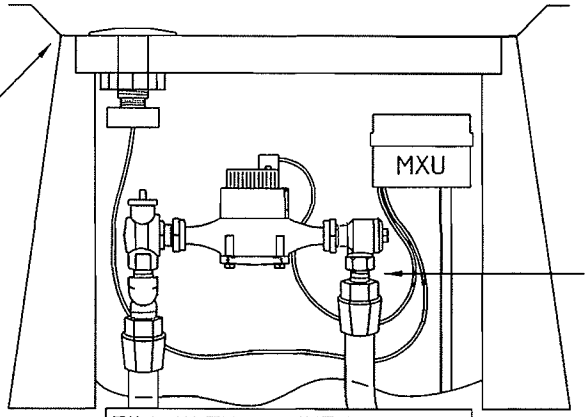

IF PRV'S ARE TO BE INSTALLED INSERT
BETWEEN CHECK VALVE & PIPE CONNECTION

TYPICAL PROFILE OF SERVICE CONNECTION
SEE SHEET 2-090-002E FOR MORE DETAILS

FORD OR MUELLER
BALLCORP

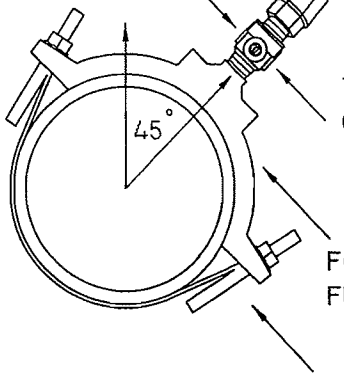

TURN BALL CORP TO SIDE SO WRENCH CAN BE
OPERATED VERTICALLY IN A NARROW TRENCH

FORD OR ROMAC SERVICE SADDLE
FULL SPECS ON SHEET 2-090-001B

SERVICE SADDLE MAY BE SUBSTITUTED FOR DIRECT
TAPPING OF DUCTILE IRON PIPE 8" AND LARGER

City of Duvall

STANDARD 5/8" - 1" METER SERVICES	REVISED 1/14/10 DC
REVISED STANDARD PLAN 2-090-001A	

WATER METER ASSEMBLY PARTS LIST - SIZE ACCORDING TO PLAN

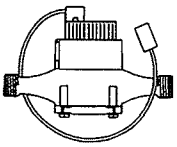

WATER METER INSTALLED BY CITY OF DUVALL - LENGTHS AS FOLLOWS:
5/8"x3/4" METER = 7-1/2" FLANGE TO FLANGE
3/4" METER = 9" FLANGE TO FLANGE
1" METER = 10-3/4" FLANGE TO FLANGE

FORD OR MUELLER ANGLE CHECK VALVE
METER SWIVEL NUT INLET BY FEMALE IRON PIPE THREAD OUTLET

FORD OR MUELLER ANGLE BALL METER VALVE
FEMALE IRON PIPE THREAD INLET BY METER SWIVEL NUT OUTLET

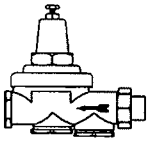

WILKINS MODEL 600 PRESSURE REDUCING VALVE (PRV)
FEMALE IRON PIPE THREAD UNION INLET BY FEMALE IRON PIPE THREAD OUTLET
5/8"x3/4" AND 3/4" METERS USE 3/4" PRV
1" METERS USE 1" PRV

CLOSED NIPPLE

MUELLER INSTA-TITE
MALE IRON PIPE THREAD BY COMPRESSION

MUELLER INSTA-TITE
FEMALE IRON PIPE THREAD BY COMPRESSION

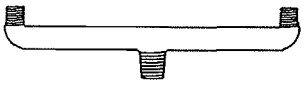

FORD OR MUELLER U-BRANCH
MALE IRON PIPE INLET BY MALE IRON PIPE OUTLETS
1" INLET BY 3/4" OUTLETS FOR UP TO 3/4" METERS
1-1/2" INLET BY 1" OUTLETS FOR 1" METERS
OUTLET SPACING SHALL BE 8" OR WIDER

FORD FB400 OR MUELLER 300 BALLCORP VALVES
AWWA/CC TAPER THREAD INLET BY MALE IRON PIPE THREAD OUTLET

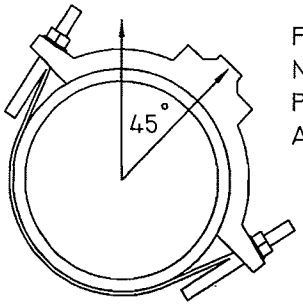

FORD FC202 OR ROMAC 202NS DUCTILE IRON SERVICE SADDLE
NYLON OR EPOXY COATED WITH STAINLESS STEEL BANDS AND BOLTS
POSITION SADDLE ON PIPE SO TAP IS 45° FROM VERTICAL
AWWA/CC TAPER THREADS

City of Duvall

WATER METER ASSEMBLY PARTS LIST	REVISED 4/24/08
REVISED STANDARD PLAN 2-090-001B	

SINGLE WATER METERS WITH PRESSURE REDUCING VALVE LOCATED IN RESIDENCE

TYPICALLY FOR NEW CONSTRUCTION APPLICATIONS

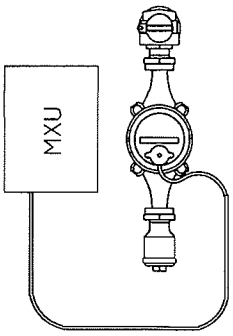

LOOKING DOWN INTO METER BOX

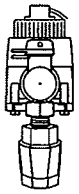

VIEW FROM ROAD

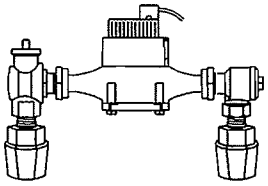

SIDE VIEW

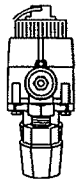

VIEW FROM LOT

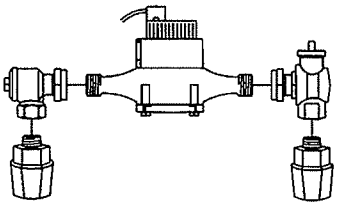

EXPLODED VIEW OF WATER PARTS

MUELLER INSTA-TITE FITTING SIZED PER PLAN

City of Duvall

5/8"-1" SINGLE METER SERVICE WITH PRV IN RESIDENCE	REVISED 4/24/08
REVISED STANDARD PLAN 2-090-002A	

SINGLE WATER METERS WITH PRESSURE REDUCING VALVE LOCATED IN METER BOX

TYPICALLY FOR RETRO-FITTING EXISTING METERS IN A WATER LINE REPLACEMENT

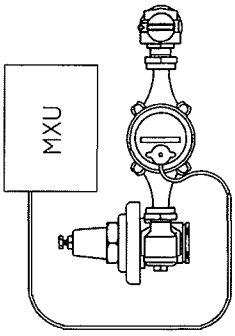

LOOKING DOWN INTO METER BOX

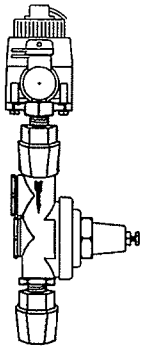

VIEW FROM ROAD

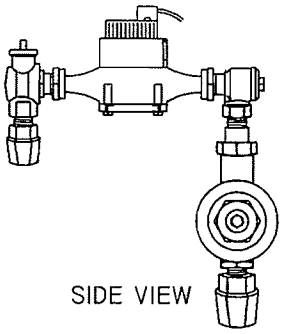

SIDE VIEW

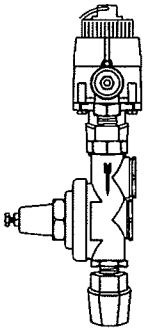

VIEW FROM LOT

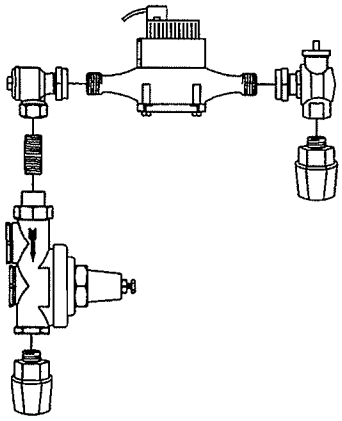

EXPLODED VIEW OF WATER PARTS

NOTES:

1. MUELLER INSTA-TITE FITTING SIZED PER PLAN
2. PRV MUST BE TURNED 90 TO METER TO ALLOW ROOM TO ACCESS ADJUSTMENT NUT

City of Duvall

5/8"-1" SINGLE METER SERVICE WITH PRV IN METER BOX	REVISED 4/24/08
REVISED STANDARD PLAN 2-090-002B	

DOUBLE WATER METERS WITH PRESSURE REDUCING VALVE LOCATED IN RESIDENCE

TYPICALLY FOR NEW CONSTRUCTION APPLICATIONS

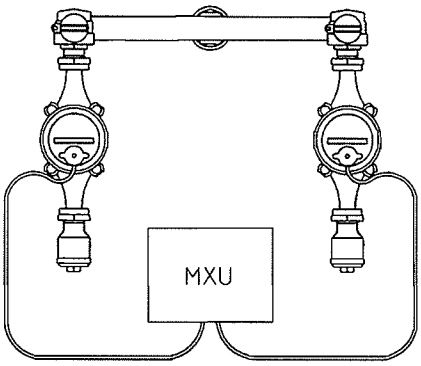

LOOKING DOWN INTO METER BOX

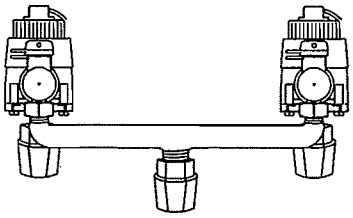

VIEW FROM ROAD

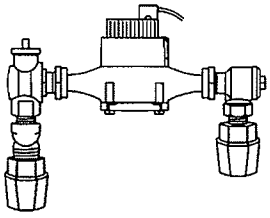

SIDE VIEW

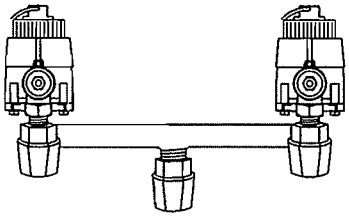

VIEW FROM LOT

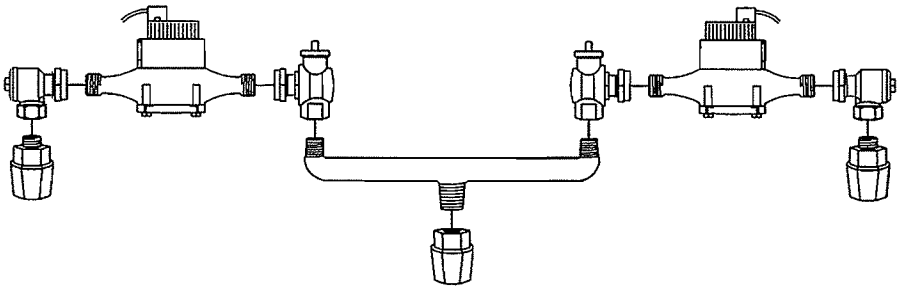

EXPLODED VIEW OF WATER PARTS

MUELLER INSTA-TITE FITTING SIZED PER PLAN

City of Duvall

5/8"-1" DOUBLE METER SERVICE WITH PRV IN RESIDENCE	REVISED 4/24/08
REVISED STANDARD PLAN 2-090-003A	

DOUBLE WATER METERS WITH PRESSURE REDUCING VALVE LOCATED IN METER BOX

TYPICALLY FOR RETRO-FITTING EXISTING METERS IN A WATER LINE REPLACEMENT

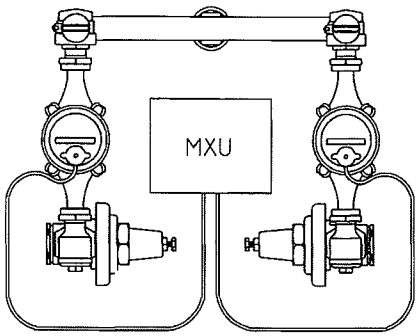

LOOKING DOWN INTO METER BOX

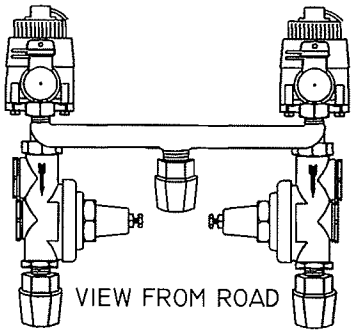

VIEW FROM ROAD

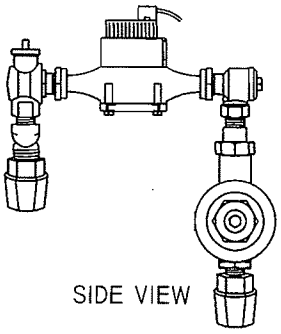

SIDE VIEW

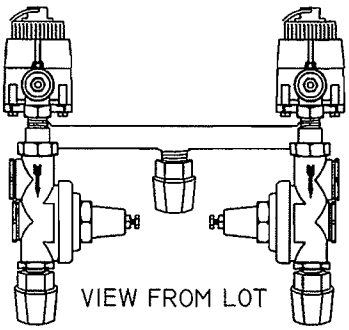

VIEW FROM LOT

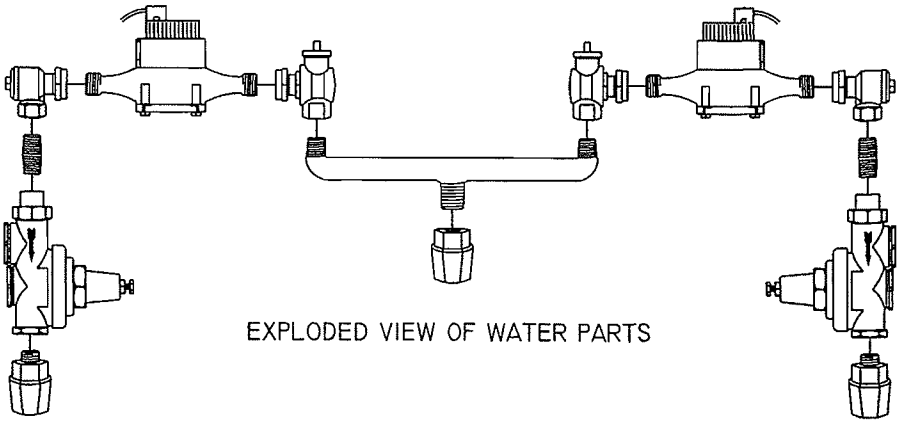

EXPLODED VIEW OF WATER PARTS

NOTE:

1. MUELLER INSTA-TITE FITTING SIZED PER PLAN
2. PRV'S MUST BE TURNED 90°TO THE METER WITH THE WITH THE ADJUSTMENT NUTS FACING EACH OTHER TO ALLOW ACCESS FOR ADJUSTMENTS

City of Duvall

5/8"-1" DOUBLE METER SERVICE WITH PRV IN METER BOX	REVISED 4/24/08
REVISED STANDARD PLAN 2-090-003B	

FLANGE STYLE METERS SHALL ALL BE 'SINGLES' - ONE METER PER BOX. SEE BELOW FOR BOX SELECTION

TRAFFIC BEARING: MID-STATES 1730-R WITH DUCTILE IRON LID AND READER

NON-TRAFFIC BEARING: CARSON 1730 WITH BLACK FLUSH MOUNT LID

IRRIGATION: CARSON 1730 WITH GREEN SOLID T-COVER LID

INSTALL METER BOX PER APPROVED PLANS OR FIELD FITTED PER INSPECTORS APPROVAL

BACKFILL WITH TOPSOIL TO 2" ABOVE METER LID

SERVICE LINES TO BE HIGH DENSITY POLY-ETHELENE PIPE
C.T.S. PRESSURE CLASS 200, SIZED ACCORDING TO PLAN
WRAP WITH 10 GA SOLID LOCATOR WIRE
MINIMUM BURY FOR SERVICE LINES SHALL BE 3'
BEDDING SHALL BE 3" OF SAND ALL AROUND PIPE

FORD FB400 OR MUELLER 300 BALLCORP VALVES
AWWA/CC TAPER THREAD INLET X M.I.P. OUTLET
TURN BALL CORP TO SIDE SO WRENCH
CAN BE OPERATED VERTICALLY
IN A NARROW TRENCH

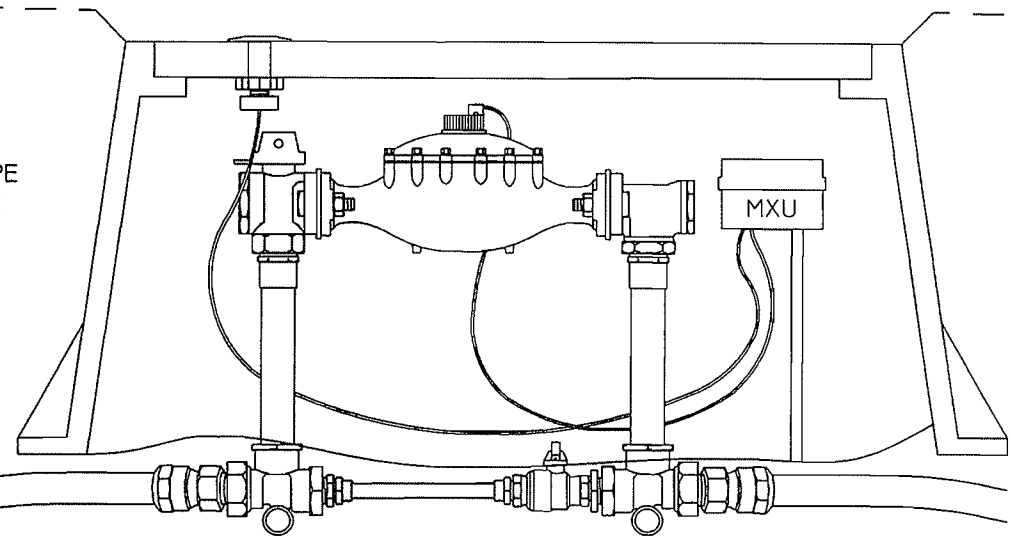

METER SETTERS SHALL BE MUELLER OR FORD AND CONSIST OF A LOCKABLE BALL VALVE METER INLET X ANGLE CHECK METER OUTLET & LOCKABLE VALVED BYPASS. SETTER CONNECTIONS MUST BE F.I.P. X F.I.P. WITH A STANDARD HEIGHT OF 18"

C.T.S. POLY LINE CONNECTIONS SHALL BE MADE WITH MUELLER 110 COMPRESSION CONNECTIONS OR FORD QUICK JOINT COUPLINGS -COMPRESSION FITTINGS SHALL BE I.P. THREAD X C.T.S.-

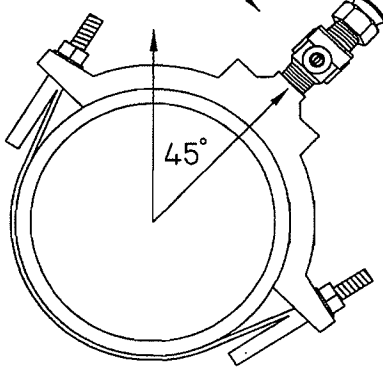

FORD FC202 OR ROMAC 202NS DUCTILE IRON SERVICE SADDLE
NYLON OR EPOXY COATED WITH STAINLESS STEEL BANDS & BOLTS
POSITION SADDLE ON PIPE SO TAP IS 45° FROM VERTICAL
AWWA/CC TAPER THREADS

SERVICE SADDLE MAY BE SUBSTITUTED FOR DIRECT TAPPING OF DUCTILE IRON PIPE 8" AND LARGER

City of Duvall

$1\frac{1}{2}$"AND LARGER 'FLANGE STYLE' METERS	REVISED 10/15/08
STANDARD PLAN	2-09-004

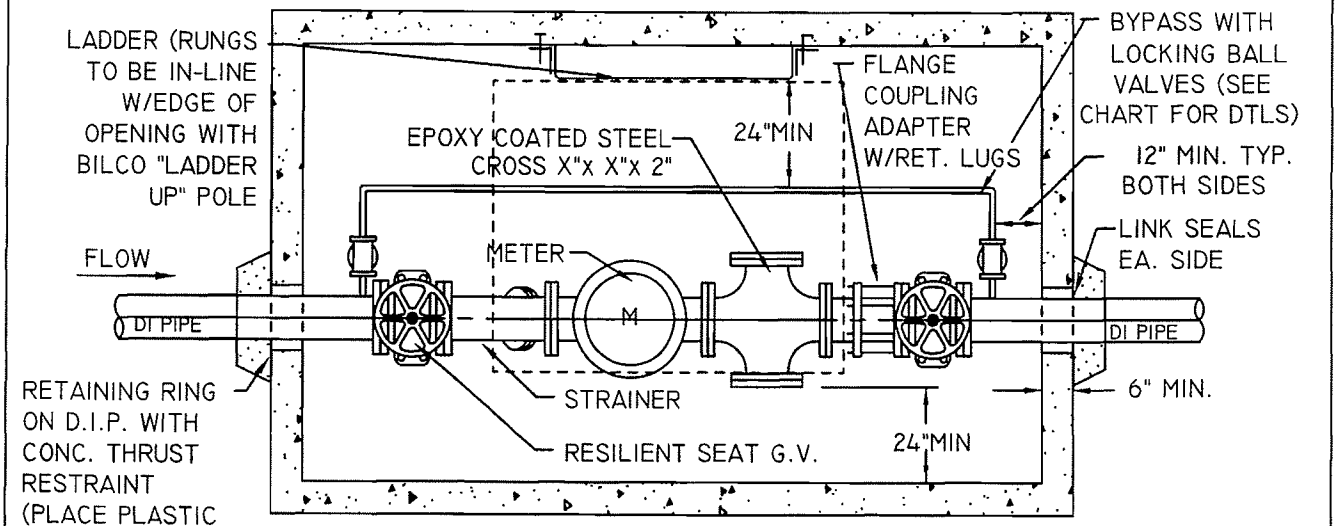

PLAN
N.T.S.

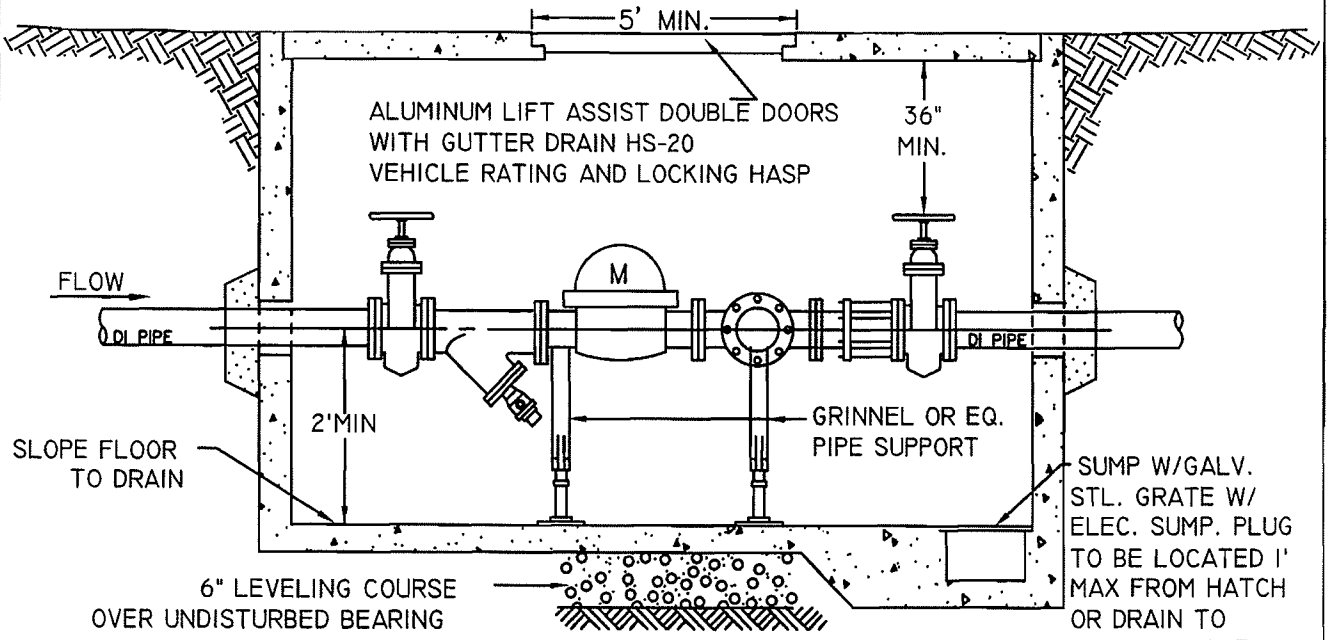

SECTION
N.T.S.

METER SIZE	RECOMMENDED BYPASS SIZE
3	1 1/2" COPPER
4	1 1/2" COPPER
6	2" COPPER
8	4" D.I.P.

NOTES:

1. COVER SHALL EXTEND 6" ABOVE GRADE WHEN VAULT IS NOT IN TRAFFIC AREA AND SHALL BE FLUSH IN TRAFFIC AREA.
2. SLOPE PAVEMENT AWAY FROM VAULT WHEN VAULT IS IN TRAFFIC AREA.
3. VAULT TO BE RATED FOR HIGHWAY USE (HS-20 VEHICLE RATING MINIMUM).
4. DOUBLE DETECTOR CHECK VALVE ASSEMBLY MUST BE INSTALLED BETWEEN METER AND POINT OF USE (BUILDING).
5. ALL BYPASSES SMALLER THAN 4" SHALL BE SADDLED.

City of Duvall

METER VAULT ASSEMBLY (METERS 2" AND LARGER)

REVISED 5/10/07

STANDARD PLAN 2-090-005

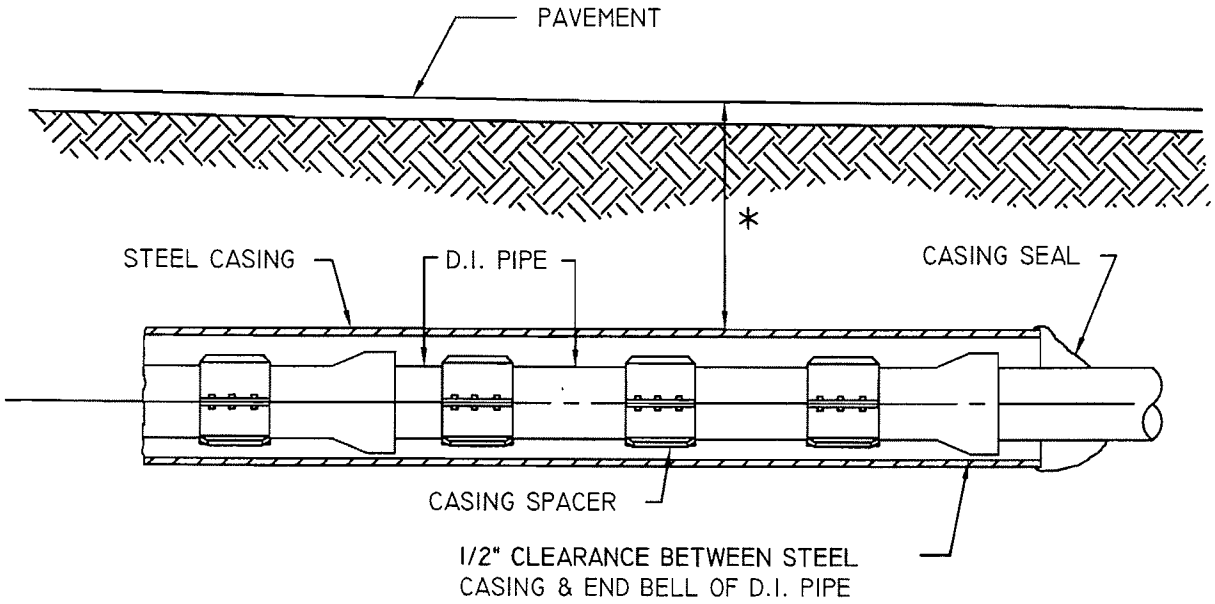

* DEPTH PER APPLICABLE CITY/COUNTY/STATE REQUIREMENTS

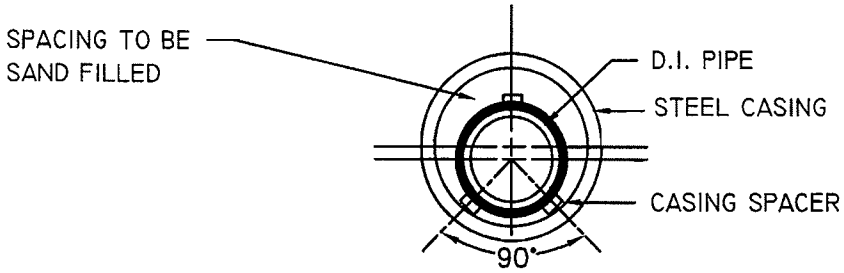

NOTES:

CASING

SIZE AND MINIMUM THICKNESS OF CASING SHALL BE AS SHOWN ON THE CONTRACT DRAWINGS. HOWEVER, THE CONTRACTOR SHALL BE RESPONSIBLE FOR SELECTING THE THICKNESS CONSISTENT WITH HIS OPERATION.

CASING SEAL

MINIMUM 3/16" THICK, SHEET TYPE SYNTHETIC RUBBER WITH STAINLESS STEEL BANDS.

City of Duvall	
PIPE CASING	REVISED 5/10/07
STANDARD PLAN	2-100-001

NOTES:

IF VALVE BOX LIES WITHIN THE LANDSCAPE (NOT COUNTING PLANTER STRIP) INSTALL CONCRETE VALVE MARKERS AS SHOWN IN DETAIL 2-07-002

END OF WATER MAIN SHALL BE CAPPED AND BLOCKED ACCORDING TO THE THRUST BLOCK DETAIL 2-13-002

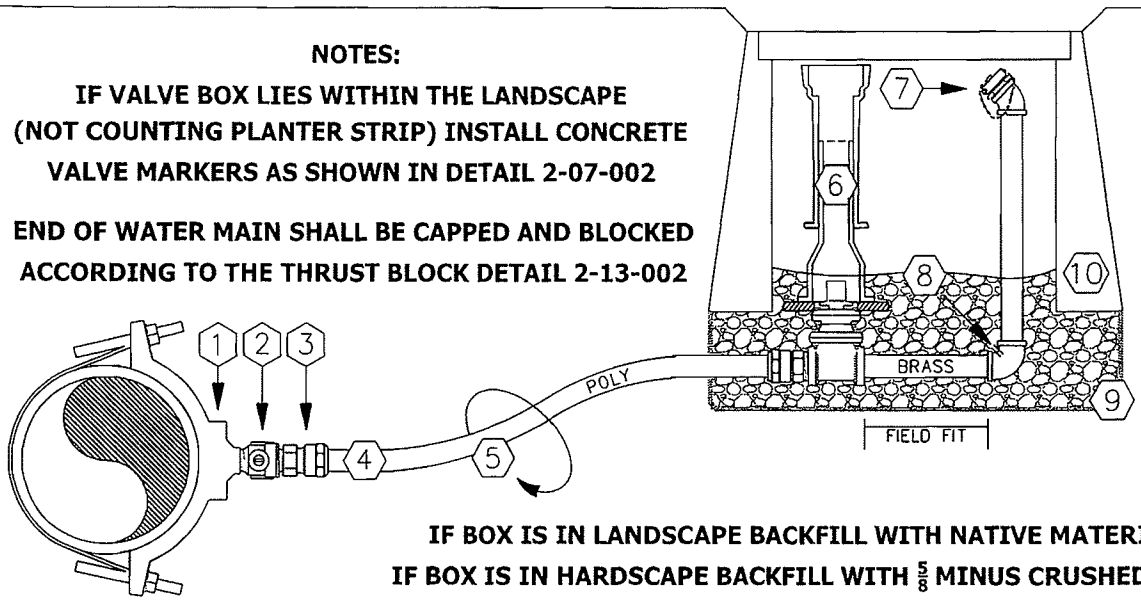

IF BOX IS IN LANDSCAPE BACKFILL WITH NATIVE MATERIAL
IF BOX IS IN HARDSCAPE BACKFILL WITH $\frac{5}{8}$ MINUS CRUSHED ROCK

(1) SADDLE SHALL BE EITHER FORD FC202 OR ROMAC 202NS PLACED SO OUTLET IS ABOVE SPRING LINE

(2) FORD FB400 OR MUELLER 300 BALLCORP VALVES (AWWA/CC TAPER THREAD INLET BY M.I.P. THREAD OUTLET)

(3) MUELLER 110 COMPRESSION CONNECTION OR FORD QUICK JOINT COUPLING (2" C.T.S x 2" F.I.P.)

(4) 2" C.T.S. POLY MAY BE USED FROM THE MAIN TO THE BOX. ALL HARD PIPES & FITTING SHALL BE 2" BRASS.

(5) BED PIPE IN 3" OF SAND ON ALL SIDES.

(6) 2" MUELLER RESILIENT WEDGE (N.R.S.) GATE VALVE WITH I.P.S. THREADED ENDS. PLACE GATE VALVE AS CLOSE TO BOX AS PRACTICAL. SEE DRAWING 2-07-001 FOR VALVE BOX DETAILS AND INFORMATION.

(7) BRASS $2\frac{1}{2}$" MALE N.S.T. X 2" I.P.S. MALE HOSE ADAPTER & $2\frac{1}{2}$" N.S.T. LUG CAP WITH CHAIN.

(8) DRILL $\frac{1}{4}$" DRAINAGE HOLE IN BRASS 90. LOCATE HOLE AT THE INSIDE OF THE TURN.

(9) 1" DRAIN ROCK FILLED TO A DEPTH OF 12". USE GEOTEXTILE FABRIC AS A BARRIER BETWEEN NATIVE SOIL AND DRAIN ROCK.

(10) BOX SELECTION:
LOCATION IN LANDSCAPE- CARSON 1730 HDPE (SHOWN) WITH BLACK HDPE LIDS.
LOCATION IN HARDSCAPE- MID-STATES 1730-R HDPE TRAFFIC RATED BOXES WITH DUCTILE IRON LIDS.

ALL EFFORTS SHALL BE MADE TO KEEP THE BOXES OUT OF A PAVED AREA. LOCATE BOX IN PLANTER STRIP IF POSSIBLE. IF NOT, LOCATE 12" BEHIND SIDEWALK. IF SIDEWALKS ARE NOT AVAILABLE PLACE BOX 6' BEHIND CURB.

DUVALL DESIGN STANDARDS: 2007

REVISION	BY	DATE
COMPLETE UPDATE	DLC	03-15-10

City of Duvall

2" BLOW OFF ASSEMBLY

DRAWING NUMBER 2-12-001

F:\Public Development Guidelines\DDS Manual\2009 Update\Details\DWG\2-12-0 Blow off

City of Duvall

INTENTIONALLY LEFT VACANT	REVISED 5/10/07
STANDARD PLAN	2-130-001

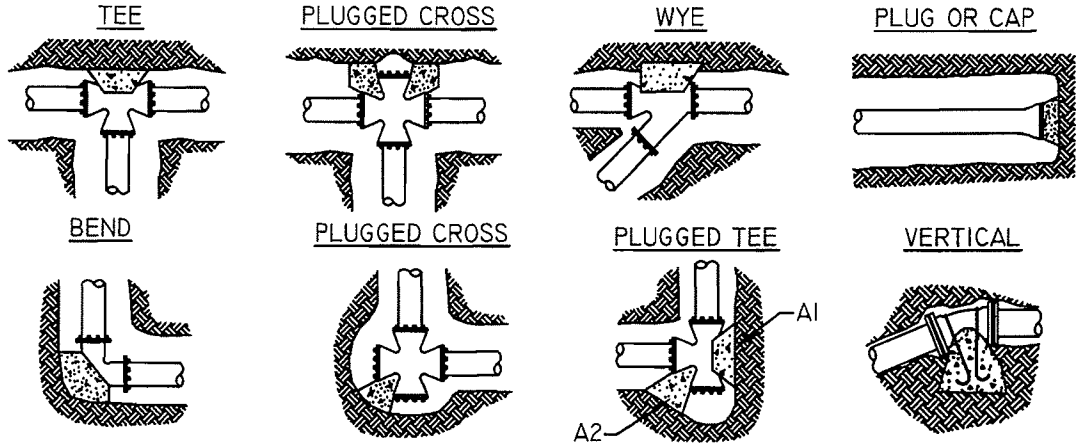

CONCRETE THRUST BLOCK SCHEDULE

BEARING AREA OF THRUST BLOCKS IN SQUARE FEET							
FITTING SIZE (INCHES)	TEE, WYE, PLUG OR CAP	90° BEND OR PLUGGED CROSS	TEE PLUGGED ON RUN BEND		45° BEND	22 1/2° BEND	11 1/4° BEND
			A1	A2			
04	1.3	1.9	2.5	1.9	1.3	1.3	1.3
06	2.8	4.0	5.7	4.0	2.1	1.3	1.3
08	5.1	7.1	10.1	7.1	3.9	2.0	1.3
10	7.9	11.2	15.7	11.2	6.1	3.2	1.6
12	11.3	16.0	22.7	16.0	8.8	4.5	2.3
14	15.3	21.7	30.7	21.7	11.9	6.1	3.1
16	20.0	28.4	40.0	28.4	15.5	8.0	4.0
18	25.3	36.0	50.7	36.0	19.5	10.1	5.1
20	31.3	44.4	62.7	44.4	24.1	12.5	6.3
24	45.3	64.0	90.7	64.0	34.9	18.1	9.1

VERTICAL VOLUME OF THRUST BLOCK IN CUBIC YARDS			
FITTING SIZE	45° BEND	22 1/2° BEND	11 1/4° BEND
4"	1.1	0.4	0.2
6"	2.7	1.0	0.4
8"	4.0	1.5	0.6
12"	8.5	3.2	1.3
16"	14.8	5.6	2.3

VERTICAL BEND		
FITTING SIZE	ROD SIZE	EMBEDMENT BEND
4" - 12"	#6	30
14" - 16"	#8	36

ABOVE BEARING AREAS BASED ON TEST PRESSURE OF 150 PSI AND AN ALLOWABLE SOIL BEARING STRENGTH OF 1,500 POUNDS PER SQUARE FOOT. TO COMPUTE BEARING AREAS FOR DIFFERENT TEST PRESSURES AND SOIL BEARING STRESSES, USE THE FOLLOWING EQUATION:
BEARING AREA = (TEST PRESSURE / 150) X (1,500 / SOIL BEARING STRESS) X (TABLE VALUE)

NOTES:

1. CONCRETE THRUST BLOCKING TO BE POURED AGAINST UNDISTURBED EARTH.
2. KEEP CONCRETE CLEAR OF JOINT AND ACCESSORIES. INSTALL 12 MIL TOTAL THICKNESS POLYETHYLENE SHEET AROUND FITTING. SECURE SHEET ENDS TO PREVENT INFILTRATION OF DIRT BETWEEN SHEET AND PIPE FITTING PRIOR TO POURING THRUST BLOCKING. PROTECT MECHANICAL JOINT FOLLOWERS AND BOLTS FROM CONCRETE WITH TEMPORARY FORMS AND 12 MIL POLYETHYLENE SHEETING.
3. THE REQUIRED THRUST BEARING AREAS FOR SPECIAL CONNECTIONS ARE SHOWN.
4. IF NOT SHOWN ON PLANS, REQUIRED BEARING AREAS AT FITTING SHALL BE AS INDICATED ABOVE, ADJUST IF NECESSARY, TO CONFORM TO THE TEST PRESSURE(S) AND ALLOWABLE SOIL BEARING STRESS(ES) STATED IN THE SPECIAL SPECIFICATIONS.
5. BEARING AREAS AND SPECIAL BLOCKING DETAILS SHOWN ON PLANS TAKE PRECEDENCE OVER BEARING AREAS AND BLOCKING DETAILS SHOWN ON THIS STANDARD DWG. BEARING AREA OF THRUST BLOCKS IS IN SQUARE FEET.
6. VERTICAL CHANGES IN DIRECTION REQUIRE SPECIFIC DESIGNS FOR THRUST BLOCKS.
7. CONCRETE MUST BE READY MIX MINIMUM 2,500 PSI MIX.
8. ALL BLOCKS TO HAVE A MINIMUM 12" THICKNESS (DIMENSION NOT SHOWN).

City of Duvall

THRUST BLOCK TABLE

REVISED 5/10/07

STANDARD PLAN

2-130-002

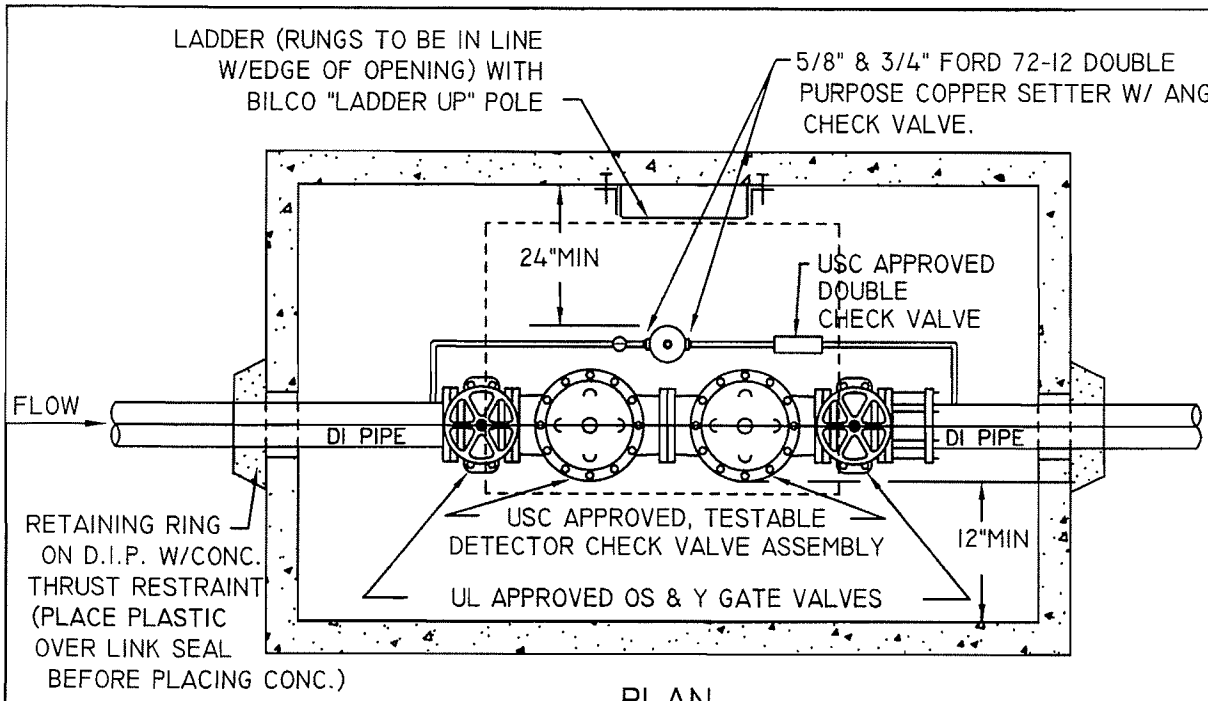

PLAN
N.T.S.

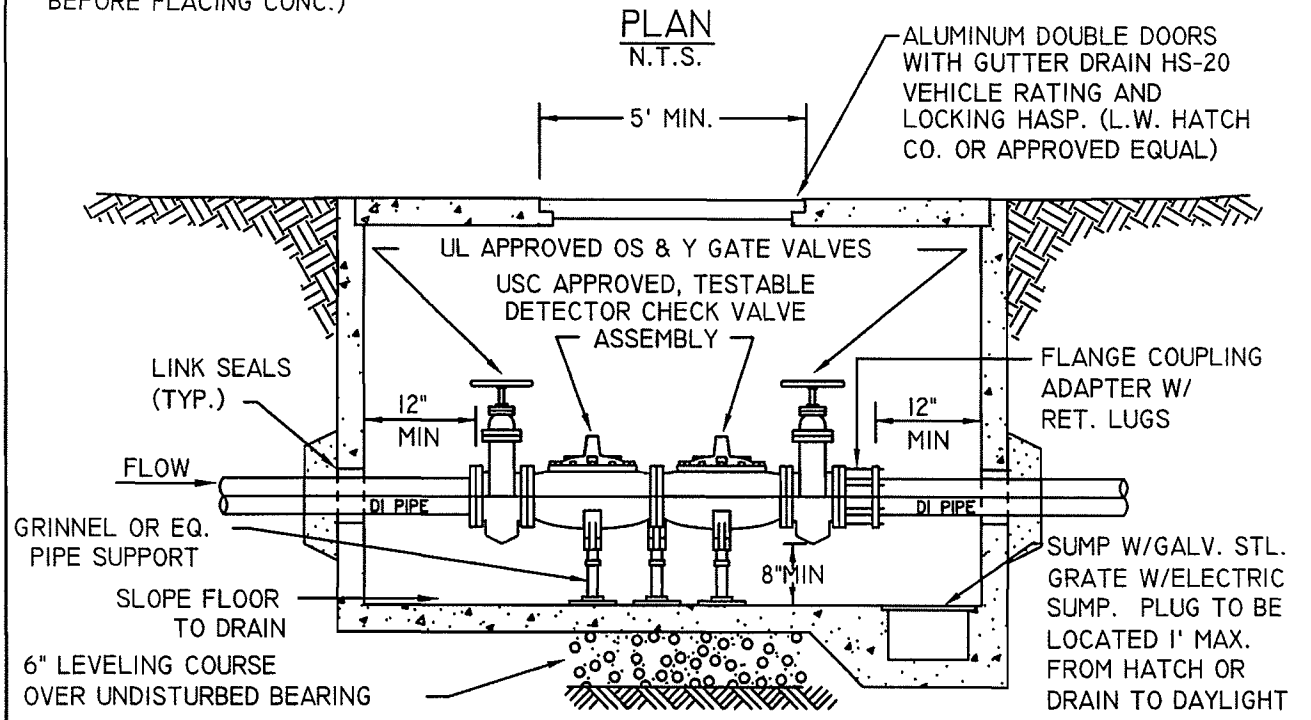

SECTION
N.T.S.

NOTES

1. 5/8" METER TO BE SUPPLIED BY CITY.
2. COVER SHALL EXTEND 6" ABOVE GRADE WHEN VAULT IS NOT IN TRAFFIC AREA AND SHALL BE FLUSH IN TRAFFIC AREA.
3. SLOPE PAVEMENT AWAY FROM COVER WHEN VAULT IS IN TRAFFIC AREA.
4. ALL BYPASSES TO BE SADDLED AND NOT DIRECT-TAPPED.

City of Duvall

DOUBLE DETECTOR CHECK VALVE	REVISED 5/10/07
STANDARD PLAN	2-153-001

APPENDIX I

Cross Connection Control Program

Cross-Connection Control Program

INTRODUCTION

A cross-connection control (CCC) program is a proactive and ongoing effort of a water purveyor to protect the health of its customers by preventing contamination of the municipal water supply that it supplies by preventing backflow of contaminants through cross-connection.

A cross-connection is any physical connection, actual or potential, between a water system and any non-potable source. All public water systems in Washington State are required to implement a cross-connection control program. All required elements of a local CCC program must be documented and included in either the Comprehensive Water System Plan (applicable to Duvall) or Small Water System Management Program document (not applicable to Duvall). The State mandate for a CCC program and the required elements of a CCC program are contained in *WAC 246-290-490 Cross Connection Control*.

The ten minimum required elements in a CCC program are as follows:

1. Adopt a local ordinance, resolution or code that establishes the purveyor's legal authority, describes operating policies and the corrective actions of a CCC program.
2. Develop and implement procedures and schedules for evaluating new and existing service connections to assess hazards.
3. Develop and implement procedures and schedules that eliminate or control cross-connections and ensure approved backflow preventers are properly installed.
4. Ensure that personnel, including one certified Cross-Connection Control Specialist (CCS), are provided to develop and implement the CCC program.
5. Develop and implement procedures to ensure approved backflow preventers are properly inspected and tested.
6. Develop and implement a backflow prevention assembly testing quality control assurance program.
7. Develop and implement procedures for backflow incident response.
8. Include cross-connection control program information in customer education materials.
9. Develop and maintain CCC program records.
10. Meet any additional CCC requirements if reclaimed water is distributed or received in the water service area.

PURPOSE AND SCOPE

This document establishes minimum standards for the City to protect the public water supply from possible backflow contamination. This document also describes minimum CCC program operating policies, provides guidelines for installation, testing and maintenance of approved backflow devices; and permitting & inspection requirements for existing and new backflow prevention devices. The document concludes with recommendations to ensure future compliance and improvement of the CCC program.

AUTHORITY

The Federal Safe Drinking Water Act of 1974 and the statutes of the State of Washington Title 43 RCW require purveyors to protect the public water systems from contamination. In addition, Washington Administrative Code *WAC 246-290-490* establishes cross-connection control program requirements for the State. In Washington State, the Department of Health (DOH) and the Department of Community, Trade and Economic Development are the lead agencies for the development and administration of the State's cross-connection control program. The City has an adopted cross-connection control ordinance in *Section 9.02.040(c)*, *Water Systems, Cross Connections and Back Flow Prevention* of the City's Municipal Code. This code establishes the City's authority in implementing a cross-connection program and prohibits cross-connections.

RESPONSIBILITY

The City is responsible for protecting its public water supply from contamination, due to backflow of pollutants through water service connections. If the City determines that a backflow prevention device is necessary at a customer's premise, the City will notify the customer to install an approved backflow device on the premise. Installation of said backflow device(s) shall be a condition of continued water service from the City. Upon installation, the customer shall provide the City with a "Backflow Prevention Assembly Inspection Report" completed by a certified Backflow Assembly Tester (BAT) showing satisfactory inspection and testing of said device(s). The customer will be responsible for all applicable testing and inspection fees.

FAILURE TO COMPLY

Any person, firm, or corporation who violates any of the provisions of this document or Duvall Municipal Code *Section 9.02.040(c)*, may be punished in accordance with Duvall Municipal Code. Any person, firm or corporation who violates any provisions and requirements of this document shall be subject to discontinuance of supply of City water to the premise. Discontinuance of the City potable supply to the premise shall remain in effect until corrective action, as required by the City, is completed, tested and approved.

CROSS-CONNECTION CONTROL PROGRAM

The City is committed to protecting the public water supply from contamination by eliminating potential cross-connections. The City's CCC program summarized below includes a statement of its goals and objectives, the evaluation of CCC elements, and recommendations.

CCC Program Goals and Objectives

The goals and objectives of the City of Duvall Water CCC Program consist of:

- Prevent contamination of the public water supply by eliminating cross-connections.
- Inventory all potential cross-connection hazard areas.
- Establish an inspection and maintenance program for all backflow prevention devices.

Evaluation of CCC Program Elements

The City of Duvall is required to develop and implement a cross-connection control program. All ten required elements of a local CCC program, as described earlier, must be documented and included in the City's Comprehensive Water System Plan. The evaluation of these CCC program elements and current level of implementation are presented below.

Cross-Connection Control Ordinance

This CCC program element requires that the purveyor "adopt a local ordinance, resolution, code, bylaw, or other written legal instrument" outlining the purveyor's program. In addition, this document must establish the purveyor's legal authority to implement a CCC program. Operating policies, technical provisions and corrective actions of the CCC program must also be addressed in the legal document.

The City currently has an adopted cross-connection control program to address regulations in WAC 246-290 as described in *Section 9.02.040(c)* of the City's Municipal Code (Ordinance 1071, adopted in 2008). This section establishes the City's authority in implementing a cross-connection program and prohibits cross-connections.

Evaluation of Service Connections

This program element requires the development and implementation of procedures for

evaluating existing and new service connections and to assess the risk of connecting the consumer's premises to the City's public water system. This element requires that the purveyor notify the consumer within a reasonable time frame of the evaluation results. New connections are required to be evaluated prior to service; and existing connections shall be inspected on a schedule acceptable to DOH.

The City has an established procedure for evaluating new service connections for potential cross connection hazards during the building permit process for new water service applicants. If a backflow device is required as a result of this evaluation, installation, inspection, testing, and a BAT-certified testing report is required prior to building permit approval and water service. The device, owners name, property address, test results, and other pertinent information are recorded in a database by the Public Works Department. Annual inspection, testing, and reporting to the City by a BAT-certified tester is required for each backflow device.

Cross-Connection Control and Elimination

This program element requires that the purveyor eliminate existing cross-connections wherever possible. If elimination is not possible, then approved backflow devices should be installed properly to eliminate the risk of contamination.

The City completed an evaluation of all commercial services in 2009. The evaluation included sending each commercial account owner a "Commercial Premise Survey Questionnaire," completing site inspections at "High Hazard" and "Severe Hazard" premises, documenting existing backflow devices, and identifying any remaining cross-connection hazards. Owners with services that did not pose a cross-connection hazard were notified that no additional backflow prevention was required at that time. Owners with services requiring testing or additional backflow prevention were notified and required to install, test, and provide a BAT report within 30 days. The device, owners name, property address, test results, and other pertinent information are recorded in a database by the Public Works Department. Annual inspection, testing, and reporting to the City by a BAT-certified tester is required for each backflow device. Any additional backflow prevention required for commercial modifications will be evaluated at time of building permit as described in the 'Evaluation of Service Connections' section above.

To date, the City has evaluated all "Severe and High Health Cross-Connection Hazards" as summarized on Table 9 of WAC 246-290-490. As of 2010 the City had evaluated the following:

- Approximately 176 individual potential cross-connection hazards had been identified from surveys sent to all non-single family residential properties within the City.
- Approximately 51 of the potential cross-connection hazards were deemed no or low hazard by the City and no further action was required at that time.
- Approximately 20 of the potential cross-connection hazards were deemed low or moderate hazards by the City and required additional evaluation by the City to determine if a backflow device was required.

- Approximately 11 individual potential moderate hazards were identified that required inspection and reporting. Approved reports had not been received for these hazards in the 2009-2010 time-frame.
- Approximately 94 individual moderate, high and severe hazards were identified that required cross-connection devices and reporting. Approved reports from all of the identified high and severe hazards were received in the 2009-2010 time-frame.

Hazard premises evaluated to date, backflow devise data and test results, and any remaining hazard premises needing evaluation are documented in a spreadsheet maintained by the Public Works Department. A copy of the 2010 Department of Health "Cross-Connection Control Program Summary Report" is attached at the end of this Appendix. The "Cross-Connection Control Program Summary Report" documents number of premises rather than individual cross-connection hazards summarized above. The City will continue to eliminate other potential cross-connections where possible including remaining medium and low risk hazards associated with commercial or residential properties by sending out additional "Commercial Premise Survey Questionnaires" to hazard premises identified each year. Remaining hazards will be prioritized as follows:

- First Priority: Any remaining medium or low risk hazards associated with commercial services.
- Second Priority: Any permitted medium or low risk hazards associated with residential services including fire suppression, swimming pools/spas, boilers, and irrigation systems. Backflow protection will not be required for residential flow-through or combination fire protection systems constructed of potable water piping and materials in accordance with WAC 246-290-490
- Third Priority: Any medium or low risk residential hazards that are not associated with a building permit.

Personnel Certification

WAC 246-290-490 requires that personnel, including one certified Cross-Connection Control Specialist (CCS), are provided by the purveyor to develop and implement a CCC program. The CCC program has been developed and is implemented by a team consisting of the Public Works Director, Public Works Superintendent, and City Engineer. At least one of the CCC program team is, and shall be, certified as Cross-Connection Control Specialists.

Backflow Device Inspection and Testing

DOH requires that all backflow devices are routinely inspected and tested by certified personnel. Inspections are required at the time of installation, annually thereafter, after a backflow incident, and/or after the assembly is repaired, reinstalled, or relocated. All testing shall be completed by a certified BAT. The City is responsible for maintaining, inspection, and testing backflow devises installed on the City's public water supply system and at City property and facilities.

Commercial and residential owners are responsible for maintaining, inspection, and testing of privately-owned devices. Annual inspection, testing, and reporting to the City by a BAT-certified tester is required for each backflow device.

Ordinarily, corrections for deficient backflow devices must be made within sixty days; however, the City may shorten this time period depending on the degree of hazard involved and the history of the device(s) in question. If found to be not in compliance with the City's request, the owner shall receive written notice that water service to the premises will be discontinued. If the owner informs the City of extenuating circumstances as to why the correction has not been completed within five working days of receipt of the notice of termination, the City may grant a time extension up to, but not exceeding, thirty days.

Testing Quality Control Assurance Program

This program element requires development and implementation of a quality control assurance program for the testing of backflow prevention devices. Successful implementation of this program element assures that all backflow prevention devices are tested in a similar manner and kept in optimal condition. Testing shall be completed in accordance with WAC 246-290-490 by a certified BAT

Incident Response

This program element requires that the purveyor develop a backflow incident response plan. The Public Works Superintendent is the responsible official during a backflow incident. The following paragraph outlines the City's response to a backflow incident. Other emergency response procedures are included in the ***City of Duvall Emergency Response Plan***.

Emergency Condition : **Water System Contamination Due to a Backflow Incident**
Impact on System : Potentially major impact. Water not suitable for potable use - loss of supply.
Emergency Response :

1. Notify the City CCS personnel of the incident.
2. Shut down the affected mains, if possible, to contain the affected contaminants.
3. Notify DOH of the backflow incident.
4. Notify all customers of the problem and instruct them to boil all water to be used for consumption and cooking or issue a no-drinking warning.
5. Flush affected water mains to remove contaminants.
6. Disinfect reservoirs and water mains, as necessary, to remove contaminated residuals.

7. Analyze water quality in other parts of the distribution system to ensure that all contaminants were contained.

Public Education

This program element requires that CCC program educational information be included in existing water system materials that are distributed to customers. Educational materials can be included in pamphlets, brochures, bill inserts, public service announcements, and consumer confidence reports. The City completes public education efforts including public education information within annual water reports, billing inserts, and other information provided to the consumer.

Record Keeping

The City maintains records of their CCC program as mandated by DOH. At a minimum, purveyors must maintain the following records:

- Master list of service connections and/or premises where backflow devices are protecting the public water system.
- Assessed hazard level of each backflow device.
- Inventory information on approved air gaps that includes location, degree of hazard, installation date, inspection history, inspection results, and personnel conducting inspections.
- Backflow inventory information that includes location, assembly description, installation date, inspection history, test and repair history, test results, and inspecting personnel.
- Atmospheric Vacuum Breaker (AVB) inventory that includes location, description, installation date, inspection history, and inspecting personnel.
- Program summary and backflow incident reports.

Reclaimed Water Requirements

Additional cross-connection control requirements may be imposed by DOH for systems that distribute or receive reclaimed water within their water service area in accordance with Chapter 90.46 RCW. The City currently does not distribute or receive reclaimed water within its service area; therefore, these requirements are not applicable. However, if reclaimed water is used in the future, then the City will follow all requirements of the permits issued under Chapter 90.46 RCW.

PROGRAM IMPLEMENTATION AND RECOMMENDATIONS

The City's cross-connection control program is an ongoing effort that requires staffing and resources to ensure its effectiveness in protecting the quality of drinking water in the distribution system. The City will continue its inspection and documentation practices in order to comply with the regulatory requirements.

The City currently meets the regulatory requirement of having at least one CCS (cross-connection specialist) within the water division to administer its CCC program. The City will continue its active training program in order to maintain compliance with this requirement.

The City provides public education materials including information on the City's CCC program. The City will continue to provide CCC program information with bill inserts, handouts distributed to customers, or other CCC program handouts.

Washington State Department of Health

Office of Drinking Water

Public Water System Cross-Connection Control Activities
Annual Summary Report for Year 2010

Part 1: Public Water System (PWS) and Cross-Connection Control Specialist (CCS) Information

PWS ID: 20750	PWS Name: DUVALL, CITY OF	County: KING
Provide name and Cert No. of CCS who develops and implements your CCC program		
CCS Name (last, first & mi): Fisher, Mike E		CCS Phone: (425) 788-3434
CCS Cert No.: 9905	BAT Cert. No. (if applicable):	
CCS is (check one):	PWS owner or employee ☑ On contract to PWS ☐ Volunteer or other ☐	

Part 2: Status of Cross-Connection Control (CCC) Program at end of 2010

PWS has(check one box in each column below):	
A written CCC program plan Y ☑ N ☐	CCC implementation activities Y ☑ N ☐

(Written program may be a separate document, or part of water system plan or small water system management program).

Provide information regarding PWS's specific CCC Program Elements

Program Element Number	Description of Element [See WAC 246-290-490(3)]	This Program Element is Currently:	
		Included in Written Program	Being Implemented or Is Completed
1	Legal Authority Established	Y ☑ N ☐	Y ☑ N ☐
2	Hazard Evaluation Procedures and Schedules	Y ☑ N ☐	Y ☑ N ☐
3	CCC Procedures and Schedules	Y ☑ N ☐	Y ☑ N ☐
4	Certified CCS Provided	Y ☑ N ☐	Y ☑ N ☐
5	Backflow Preventer Inspection and Testing	Y ☑ N ☐	Y ☑ N ☐
6	Testing Quality Control Assurance Program	Y ☑ N ☐	Y ☑ N ☐
7	Backflow Incident Response Procedures	Y ☑ N ☐	Y ☑ N ☐
8	Public Education Program	Y ☑ N ☐	Y ☑ N ☐
9	CCC Records	Y ☑ N ☐	Y ☑ N ☐
10	Reclaimed Water Permit	Y ☐ N ☐ N/A ☑	Y ☐ N ☐ N/A ☑

Part 3A: System Characteristics at End of 2010

Indicate the number of connections of each type that the PWS serves (whether or not they are protected by backflow preventers). **Estimate if necessary.**

Type of Service Connection	Number
Residential (As defined by PWS)	2202
All Other (Include dedicated fire sprinkler and irrigation lines and PWS-owned facilities such as water and wastewater treatment plants and pumping stations, parks, piers and docks.)	127
Total Number of Connections	2329

Part 3B: Cross-Connection Control for High-Hazard Premises or Systems Served by the PWS

If PWS does not serve any high-hazard premises or systems, check here ☐ and go to Part 4.

- Complete all cells. Enter zero (0) in cells if PWS does not serve such premises.
- Estimate number of connections served if necessary (OK to use phone book).
- Hazard evaluations do not need to be done to complete this table.

Type of High-Hazard Premises or Systems [WAC 246-290-490(4)(b)]	Number of Connections at end of 12/31/2010			
	A. Being Served Water by PWS[1]	B. With Premises Isolation by AG/RP	C. With Column B AG Inspected or RP Tested [2]	D. Granted Exception from Mandatory Premises Isolation
Agricultural (farms and dairies)	0	0	0	0
Beverage bottling plants (including breweries)	0	0	0	0
Car washes	0	0	0	0
Chemical plants	0	0	0	0
Commercial laundries and dry cleaners	0	0	0	0
Both reclaimed water and potable water provided	0	0	0	0
Film processing facilities	0	0	0	0
Dedicated fire protection systems with chemical addition or using unapproved auxiliary supplies	0	0	0	0
Food processing plants (including canneries, slaughter houses, rendering plants)	0	0	0	0
Hospitals, medical centers, nursing homes, veterinary, medical and dental clinics, and blood plasma centers	10	10	9	0
Separate irrigation systems using purveyor's water supply and chemical addition[4]	0	0	0	0
Laboratories	0	0	0	0
Metal plating industries	1	1	1	0
Petroleum processing or storage plants	0	0	0	0
Piers and docks	0	0	0	0
Radioactive material processing plants or nuclear reactors	0	0	0	0
Survey access denied or restricted	0	0	0	0
Wastewater lift/pump stations (non-residential only)	0	0	0	0
Wastewater treatment plants	2	2	2	0
Unapproved auxiliary water supply interconnected with potable water supply	0	0	0	0
	0	0	0	0
Totals	13	13	12	0

[1]Count multiple connections or parallel installations as ***separate*** connections.

[2]Count only those connections with AG or RPBA installed for premises isolation. Don't include connections with in-premises protection only, or connections with DCVA/DCDAs installed for premises isolation.

[3]Count only those connections whose premises isolation preventers were inspected (AG) or tested (RPBA) during 2010.

[4]For example, dedicated lines to irrigation systems in parks, playgrounds, golf courses, cemeteries, estates, etc.

[5]Premises with hazardous materials or processes (requiring isolation by AG or RPBA) such as: aircraft and automotive manufacturers, pulp and paper mills, metal manufacturers, military bases, and wholesale customers that pose a high hazard to the PWS. May be grouped together in categories, e.g.: other manufacturing or other commercial. If needed, attach additional sheet giving same information as requested in table.

Part 3C: Cross-Connection Control for Medical Category High-Hazard Premises Served by the PWS

If PWS does not serve any medical type premises, check here ☐ and go to Part 4.

- Complete all cells. Enter zero (0) in cells if PWS does not serve such premises.
- Estimate number of connections served if necessary (OK to use phone book).
- Hazard evaluations do not need to be done to complete this table.

Type of High-Hazard Premises or Systems [WAC 246-290-490(4)(b)]	Number of Connections at end of 12/31/2010			
	A. Being Served Water by PWS[1]	B. With Premises Isolation by AG/RP	C. With Column B AG Inspected or RP Tested[2]	D. Granted Exception from Mandatory Premises Isolation
Hospitals				
Hospitals (include psychiatric hospitals and alcohol and drug treatment centers)	0	0	0	0
Facilities for Treatment and Care of Patients Not Located in Hospitals Counted Above				
Same day surgery centers	0	0	0	0
Out-patient clinics and offices	2	2	2	0
Alternative health out-patient clinics and offices	0	0	0	0
Psychiatric out-patient clinics and offices	0	0	0	0
Chiropractors	0	0	0	0
Hospice care centers	0	0	0	0
Childbirth centers	0	0	0	0
Kidney dialysis centers	0	0	0	0
Blood centers	0	0	0	0
Dental clinics and offices	6	6	6	0
Facilities for Housing Patients				
Nursing homes	0	0	0	0
Boarding homes	0	0	0	0
Residential treatment centers	0	0	0	0
Other Medical-Related Facilities				
Mortuaries	0	0	0	0
Morgues and autopsy facilities (not in hospitals)	0	0	0	0
Veterinarian offices, clinics and hospitals	2	2	1	0
All other (describe in Part 6: Comments on page 6)	0	0	0	0
Totals	10	10	9	0

[1]Count multiple connections or parallel installations as ***separate*** connections.

[2]Count only those connections with AG or RPBA installed for premises isolation. Don't include connections with in-premises protection only, or connections with DCVA/DCDAs installed for premises isolation.

[3]Count only those connections whose premises isolation preventers were inspected (AG) or tested (RPBA) during 2010.

Part 4: Backflow Preventer Inventory and Testing Data During Year 2010

- Complete all cells. Enter zero (0) if there are no backflow preventers in that category.
- Count only the backflow preventers that the PWS relies upon for protection of the distribution system. If your records do not distinguish between premises isolation and in-premises protection preventers, enter all data in Premises Isolation section and check the box.
- Count AVBs on irrigation systems only. **If you do not track AVBs, enter "UNK".**
- Count multiple tests or failures for any particular backflow preventer as one test or failure for that backflow preventer.
- Multiple Service or Parallel Connections: Count each assembly separately.
- Assemblies on Dedicated Fire or Irrigation Lines: Count as Premises Isolation Assemblies.

If PWS does not track AVBs Check here: ☑

	Backflow Preventer Category and Testing/Inspection Information	Air Gap	RPBA	RPDA	DCVA	DCDA	PVBA	SVBA	AVB
Premises Isolation, including preventers isolating PWS-owned facilities. ***If In-Premises Protection preventers are also included, check here.*** ☑									
Rows 1-3 pertain ONLY to Premises Isolation preventers in service at beginning of 2010									
1	In service on 1/1/2010	0	15	0	54	5	0	0	unk
2	Inspected and/or Tested in 2010[1]	0	0	0	0	0	0	0	unk
3	Failed Inspection or Test in 2010	0	0	0	0	0	0	0	unk
Rows 4 - 6 pertain ONLY to NEW Premises Isolation preventers installed during 2010									
4	New preventers installed in 2010[2]	0	0	0	0	0	0	0	unk
5	Inspected and/or Tested in 2010[1]	0	0	0	0	0	0	0	unk
6	Failed inspection or test in 2010[3]	0	0	0	0	0	0	0	unk
7	Preventers taken out of service in 2010[3]	0	0	0	0	0	0	0	0
Premises Isolation Total at end of 2010[4]		0	15	0	54	5	0	0	unk
In-Premises Protection (Fixture Protection or Area Isolation), including preventers within PWS-owned facilities.									
Rows 8 - 10 pertain ONLY to In-Premises Protection Preventers in service at beginning of 2010									
8	In service on 1/1/2010	0	16	0	2	0	0	0	unk
9	Inspected and/or Tested in 2010[1]	0	0	0	0	0	0	0	unk
10	Failed Inspection or Test in 2010	0	0	0	0	0	0	0	unk
Rows 11 - 13 pertain ONLY to NEW In-Premises Protection Preventers installed during 2010									
11	New preventers installed in 2010[2]	0	0	0	0	0	0	0	unk
12	Inspected and/or Tested in 2010[1]	0	0	0	0	0	0	0	unk
13	Failed inspection or test in 2010	0	0	0	0	0	0	0	unk
14	Preventers taken out of service in 2010[3]	0	0	0	0	0	0	0	0
In-Premises Protection Total at end of 2010[4]		0	16	0	2	0	0	0	unk
Grand Total at end of 2010		0	31	0	56	5	0	0	unk

[1]Initial and/or routine annual inspection (for proper installation and approval status) and/or test (for testable assemblies only using DOH/USC test procedures).Includes preventers installed on connections where backflow prevention was not previously required and any preventers that replaced those in service at beginning of 2010. Replacement preventers may be of a different type than the original.

[2]Includes preventers installed on connections where backflow prevention was not previously required and any preventers that replaced those in service at the beginning of 2010. Replacement preventers may be of a different type than the original.

[3]New or existing preventers taken out of service, whether or not they were replaced by the same type or different type of preventer.

[4]Total at end of 2010 should be equal to the number of preventers in service at beginning of 2010 plus those installed during 2010 minus the number of preventers taken out of service during 2010.

Part 4B: Other Implementation Activities in 2010

Complete all cells. Enter zero (0) if not applicable.

Activity or Condition	Number
New service connections evaluated for cross-connection hazards to PWS in 2010.	14
New service connections requiring backflow protection to protect PWS.[1]	0
Existing service connections evaluated for cross-connection hazards to PWS in 2010.	122
Existing service connections requiring backflow protection to protect PWS.[1,2]	100
Exceptions granted to high-hazard premises per WAC 246-290-490(4)(b) in 2010.[3]	0
CCC enforcement actions taken by PWS during 2010.[4]	0

[1]Include services where either premises isolation or in-premises preventers were required to protect the PWS.
[2]Include existing services that need new, additional or higher level backflow prevention.
[3]A DOH Exceptions to Hazard Premises Form *must* be attached for each exception granted during the year.
[4]"Enforcement actions" mean actions taken by the PWS (such as water shut-off, PWS installation of backflow preventer) when the customer fails to comply with PWS's CCC requirements.

Part 5: Backflow Incidents and "Off-Normal" Events in 2010

	Backflow Incidents, Risk Factors and Indicators during 2010	Number (Enter 0 if none)	Check if Data Not Available
Backflow Incidents during 2010			
1	Backflow incidents that contaminated the PWS[5].	0	☐
2	Backflow incidents that contaminated the customer's drinking water system ***only***[5].	0	☐
Risk Factors for Backflow during 2010			
3	Distribution main breaks per 100 miles of pipe.	0.00	☐
4	Low pressure events (<20 psi in PWS distribution system).	0	☐
5	Water outage events.	0	☐
Indicators of Possible Backflow during 2010			
6	Total health-related complaints received by PWS.[6]	0	☐
7	Received during BWA or PN events.[7]	0	☐
8	Received during low pressure or water outage events.	0	☐
9	Total aesthetic complaints (color, taste, odor, air in lines, etc.).	1	☐
10	Received during BWA or PN events.[7]	0	☐
11	Number of these complaints received during low pressure or water outages events.	0	☐

[5]Complete and submit a Backflow Incident Report form for each known backflow incident.
[6]Such as stomach ache, headache, vomiting, diarrhea, skin rashes, etc.
[7]"**BWA**" means ***Boil Water Advisory*** and "**PN**" means ***Public Notification*** for water quality reasons.

Part 6: Comments and Clarifications

Enter comments or clarifications to any of the information included in this report. Note for on-screen completion: Comments will not "word wrap" from one line to the next. Press to continue on new line. Maximum length of each comment is 255 characters, including spaces.

Part No.	Date Added	Comment
Pt 5	4/13/10	Zero water line break and repair in ~39 miles of water line in 2010

Part 7: Report Completion Information

I certify that the information provided in this CCC Activities Report is complete and accurate to the best of my knowledge.		
CCC Program Mgr. Name[1]: Mike E Fisher		Title: PW Superintendent
Signature:		Date: 04/29/2011
Phone: (425) 788-3434	E-mail: mike.fisher@duvallwa.gov	
I have reviewed this report and certify that the information provided is complete and accurate to the best of my knowledge.		
PWS Mgr./Owner Name[2]: Mike E Fisher		Title: PW Superintendent
Signature:	Op. Cert. No.: 9905	Date: 04/29/2011

[1] CCC Program Manager is generally the CCS who is responsible for development and implementation of the PWS's CCC Program.

[2] The person that the CCC Program Manager reports to or other manager having direct responsibility and/or oversight of the CCC program.

Washington State Department of Health

Office of Drinking Water

Cross-Connection Control Program Summary Report For 2010

Describe the characteristics of the PWS's CCC Program at the end of 2010. Complete this form only if PWS had written CCC program plan, policies or procedures at end of 2010.

Part 1: Public Water System (PWS) Identification

PWS ID: 20750	PWS Name: DUVALL, CITY OF	County: KING

Part 2: Cross-Connection Control (CCC) Program Characteristics

A. Type of Program Currently Implemented

Type of Program	Check One
Premises isolation only.	☐
Combination program: reliance on both premises isolation and in-premises protection.	☑
In transition from a combination program to a premises isolation only program.	☐

B. Coordination with Authority Having Jurisdiction (AHJ) on Cross-Connection Issues

Indicate the status of coordination with AHJs in your service area. The AHJ is the entity that enforces the Uniform Plumbing Code. ***Check one box in each of last 3 columns for each AHJ in your service area.***

AHJ No.	Name of AHJ (e.g., the City or County Building Department)	PWS Currently:		AHJ Declined to Coordinate
		Coordinates with AHJ	Has Written Agreement with AHJ	
1	City of Duvall	Y ☑ N ☐	Y ☑ N ☐	Y ☐ N ☑
2		Y ☐ N ☐	Y ☐ N ☐	Y ☐ N ☐
3		Y ☐ N ☐	Y ☐ N ☐	Y ☐ N ☐
4		Y ☐ N ☐	Y ☐ N ☐	Y ☐ N ☐
5		Y ☐ N ☐	Y ☐ N ☐	Y ☐ N ☐

[1] If more than 5 AHJs, attach separate sheet giving the above information.

C. Corrective or Enforcement Actions Available to the Purveyor

Type of Corrective Action	Indicate Whether Available	Most Often Used (Check One)
Denial or discontinuance of water service.	Y ☑ N ☐	☐
Purveyor installs backflow preventer and bills customer.	Y ☐ N ☑	☐
Assessment of fines (in addition to elimination or control of cross-connection).	Y ☑ N ☐	☐
Other corrective actions (describe): Send out surveys and letters to all commercial users. Describe penalties if installation and/or testing is not completed (City will discontinue service) and have had good results and cooperation	Y ☑ N ☐	☑

D. CCC Program Responsibilities

Do not include enforcement action related procedures or circumstances.

CCC Program Activity	Responsible Party (Check one per row)	
	Customer	Purveyor
Hazard Evaluation by DOH-certified CCS	☐	☑
Backflow preventer (BP) ownership	☑	☐
BP installation	☑	☐
BP ***initial*** inspection (for proper installation - all BPs)	☑	☐
BP ***initial*** test (for testable assemblies)	☑	☐
BP ***annual*** inspection (Air Gaps and AVBs)	☑	☐
BP ***annual*** test (for testable assemblies)	☑	☐
BP maintenance and repair	☑	☐

E. Backflow Protection for Fire Protection Systems

Please remember to enter number of days allowed if you require retrofitting.

PWS coordinates with ***AHJ*** on CCC issues for fire protection systems(FPS).	Y ☑ N ☐ N/A ☐
PWS coordinates with ***local Fire Marshal*** on CCC issues for FPS.	Y ☑ N ☐ N/A ☐
PWS ensures backflow prevention is installed before serving ***new*** connections with FPS.	Y ☑ N ☐
PWS requires retrofits to ***high***-hazard FPS.	Y ☑ No. of days allowed: 30 N ☐ N/A ☐
PWS requires retrofits to ***low***-hazard FPS.	Y ☑ No. of days allowed: 30 N ☐ N/A ☐

F. Backflow Protection for Irrigation Systems

Minimum level of backflow prevention required on irrigation systems ***without*** chemical addition.	Not Addressed ☐ AVB ☐ PV/SVBA ☐ DCVA ☑ RPBA ☐
PWS currently inspects AVBs upon ***initial*** installation.	Y ☐ N ☐ N/A ☑
PWS currently inspects AVBs upon repair, reinstallation or relocation.	Y ☐ N ☐ N/A ☑

G. Used Water

PWS prohibits, by ordinance, rules, policy or agreement, the intentional return of used water (e.g. for heating or cooling) into the distribution system.	Y ☑ N ☐
If not prohibited at present, date plan to prohibit use.	N/A ☑
Current number of service connections returning used water to distribution system.	0

H. Backflow Protection for Auxiliary Water Supplies[1] NOT Interconnected with PWS

Indicate the minimum backflow preventer and type of protection required for service connections having unapproved auxiliary water supplies when they are NOT interconnected to the PWS. Check one box per row.

Existing service connections.	None ☑ DCVA ☐ RPBA ☐ AG ☐
Type of protection required.	None ☑ In-premises protection ☐ Premises isolation ☐
New service connections.	None ☑ DCVA ☐ RPBA ☐ AG ☐
Type of protection required.	

	None ☑ In-premises protection ☐ Premises isolation ☐

[1] An auxiliary water supply is any water supply on or available to customer's premises in addition to the purveyor's potable water supply.

Page 2

I. Backflow Protection for Tanker Trucks and Temporary Water Connections

Minimum level of backflow protection (installed on or associated with the truck) required for tanker trucks taking water from PWS.	AG ☐ DCVA ☑ RPBA ☐ Not Specified ☐ Tanker trucks not allowed ☐
PWS requires tanker trucks to obtain water at designated filling sites each equipped with permanently installed backflow preventer(s).	Y ☑ (Min. protection: DCVA ☑ RPBA ☐) N ☐ N/A ☐ No sites provided ☐
PWS currently accepts tanker trucks approved by other PWSs without further inspection or testing.	Y ☑ N ☐ N/A ☐
Minimum level of backflow protection required for temporary water connections (e.g. for construction sites).	AG ☐ DCVA ☑ RPBA ☐ Not specified ☐ Temp. connections not allowed ☐
PWS requires testing each time the temporary connection backflow preventer is relocated.	Y ☑ N ☐ N/A ☐ (Temp. connections not allowed)
PWS provides approved backflow preventer for temporary connections.	Y ☑ N ☐ N/A ☐ (Temp. connections not allowed)

J. Backflow Protection for Non-Residential Connections

For each category shown, indicate whether PWS has non-residential connections of that type and the **minimum** level of ***premises isolation*** backflow protection required (whether or not PWS currently has that type of customer).

Type of Connection	PWS has Customers of this Type	Minimum Premises Isolation Backflow Protection Required
Commercial	Y ☑ N ☐	Not Required ☐ DCVA ☑ RPBA ☐
Industrial	Y ☑ N ☐	Not Required ☐ DCVA ☑ RPBA ☐
Institutional	Y ☑ N ☐	Not Required ☐ DCVA ☑ RPBA ☐
Other (specify): Backflow prevention for c	Y ☐ N ☐	Not Required ☐ DCVA ☐ RPBA ☐

K. Backflow Protection for Wholesale Customers

Indicate whether the PWS requires backflow protection at interties with wholesale customers (other PWSs).

Type of Intertie	PWS has (plans to have) Customers of this Type	Backflow Protection Required
Existing	Y ☐ N ☑	Not specified / Not required ☐ Always required ☐ Required only if purchaser's CCC program is inadequate ☐ Minimum required (if applicable): DCVA ☐ RPBA ☐
New	Y ☐ N ☑	Not specified / Not required ☐ Always Required ☐ Required only if purchaser's CCC program is inadequate ☐ Minimum required (if applicable): DCVA ☐ RPBA ☐

L. Exceptions to Mandatory Premise Isolation

PWS's written CCC Program Plan *allows* system to grant Exceptions to mandatory premises isolation per WAC 246-290-490(4)(b(iii).	Y ☐ N ☐ Doesn't Address ☐
PWS currently grants new Exceptions.	Y ☐ N ☑
PWS granted Exceptions in previous reporting years.	Y ☐ N ☐

Part 3: CCC Program Record-Keeping and Inventory

Indicate the type or name of computer software used by the PWS to track CCC records.

Cross-Track (BMI) ☐ BPMS ☐ XC2 (Engsoft) ☐ Tokay ☐ Other commercial CCC software (specify) ☐

Custom developed for or by PWS[1] ☐ Other non-CCC software (e.g. Excel) ☑ None Used ☐

[1] Do not include commercial CCC software customized for PWS. If PWS uses customized commercial software, check the box for the appropriate commercial software name.

Part 4: Comments and Clarifications

Enter comments or clarifications to any of the information provided in this report.

Part No.	Date Added	Comment
Pt 3	4/13/10	We track connections via paper copies, excel spreadsheets, and word documents

Part 5: CCC Program Summary Completion Information

I certify that the information provided in this CCC Program Summary is complete and accurate to the best of my knowledge.		
CCC Program Mgr. Name[1]: Mike E Fisher		Title: PW Superintendent
Signature:		Date: 04/29/2011
Phone: (425) 788-3434	E-mail*: mike.fisher@duvallwa.gov	
I certify that the information provided in this report accurately represents the status and description of this water system's CCC Program.		
PWS Mgr/Owner Name[2]: Mike E Fisher		Title: PW Superintendent
Signature:	Op. Cert. No.: 9905	Date: 04/29/2011

*Required Field. For security reasons, an e-mail address must be provided. DOH will e-mail you to confirm any changes made to your data

1 The CCC Program Manager is generally the CCS responsible for developing and implementing the PWS's CCC program.

2 The person that the CCC Program Manager reports to or other manager having direct responsibility and/or oversight of the CCC program. This person doesn't need to be in charge of the entire water system.

APPENDIX J

Wellhead Protection Program

CITY OF DUVALL

Wellhead Protection Program

INTRODUCTION

A wellhead protection program is a proactive and ongoing effort of a water purveyor to protect the health of its customers by preventing contamination of the groundwater that it supplies for drinking water.

Section 1428, of the 1986 Amendments to the federal Safe Drinking Water Act (SDWA), mandates that each state develop a wellhead protection program. In Washington State, the Department of Health (DOH) is the lead agency for the development and administration of the State's wellhead protection program. All federally defined Group A public water systems that use groundwater as a water source are required to implement a wellhead protection program. All required elements of a local wellhead protection program must be documented and included in either the Comprehensive Water System Plan (applicable to Duvall) or Small Water System Management Program document (not applicable to Duvall).

The State mandate for wellhead protection and the required elements of a wellhead protection program are contained in *WAC 246-290-135* *Source Protection*, which became effective in July of 1994. The minimum required elements of a wellhead protection program for water systems in Washington State that rely on groundwater are as follows:

- A completed susceptibility assessment of each water source.
- Delineation of wellhead protection areas for each water source.
- An inventory of known and potential contaminant sources located within the defined wellhead protection areas. This inventory list shall be updated every two years.
- Documentation of the purveyor's notification to all owners/operators of known and potential sources of groundwater contamination within defined wellhead protection areas.
- Documentation of the purveyor's notification to regulatory agencies and local governments of the defined boundaries of the wellhead protection areas and the findings of the contaminant source inventory.
- A contingency plan to ensure that customers have an adequate supply of water in the event that contamination causes a temporary or permanent loss of the system's principal source of supply.
- Documentation of the purveyor's coordination with local emergency spill responders (including police, fire, and health departments), including notification of wellhead protection area boundaries, results of susceptibility assessment, inventory findings, and contingency plan.

The City of Duvall is not required to prepare a Wellhead Protection Program, because all potable water supply is provided by Seattle Public Utilities. However, the City is taking a proactive

approach to protecting the Taylor's Landing Well in the event that the City decides to use the well in the future as a source of potable water.

PAST PROTECTION EFFORTS

The City of Duvall currently holds a water rights claim to the Taylor's Landing Well, which is located southwest of the intersection of Main Street NE and NE Allen Street. The well is an artesian well that was historically used to augment low or dry private wells in the unincorporated areas north of Duvall by hauling water from the well site. The Taylor's Landing Well was closed to the public on May 31, 2000 for liability reasons and as a result, the well is currently not used for potable water supply. The well, which is now securely capped and locked, is used in the summer by the City's Public Works Department to fill water trucks for irrigation and other non-potable purposes. The City is retaining the water rights and ownership of the well for possible future use. This wellhead protection plan has been prepared to protect the wellhead in the event that this effort is pursued in the future.

WATER QUALITY

The Taylor's Landing Well has a history of good water quality, both before and after public use of the well, which was terminated in May of 2000. Water quality samples were taken from the Taylor's Landing Well in December of 2001 as part of the East King County Groundwater Monitoring Program. These were the second round of water samples for the well and were tested for a substantially larger number of parameters than the first round. Samples were collected by King County Water and Land Resources Division staff and analyzed by the King County Environmental Lab. The samples were tested for standard inorganic and organic compounds and were all found to be satisfactory in regards to the organic and inorganic parameters. Additionally, many of the organic compounds could not be detected because their concentrations were below the laboratory's method detection limit (MDL). Though not required, in an effort to document water quality at the wellhead the City began annual water quality testing in 2011.

SUSCEPTIBILITY ASSESSMENT

In 1994, DOH developed the *Susceptibility Assessment Survey Form* for water purveyors to complete for use in determining a drinking water source's potential for contamination. The results of the susceptibility assessment may provide monitoring waivers which allows reduced source water quality monitoring.

The City of Duvall has not performed a susceptibility assessment for this well in the past, since the well is not used for potable water supply and is not considered a source of drinking water. The City will complete and submit a susceptibility assessment of the Taylor's Landing Well to DOH if the City decides to use the well as a potable water source in the future.

DELINEATION OF WELLHEAD PROTECTION AREAS

A wellhead protection area is the surface and subsurface area surrounding a well, well field, or spring; through which contaminants are likely to pass and eventually be transported into the drinking water system. This is the area around the source that must be managed to protect the water supply from contamination. Establishing, or delineating, the boundaries of the wellhead protection area for each source is most commonly accomplished using the time of travel rates of groundwater.

Wellhead Protection Area Zones

The first component of a wellhead protection area is the sanitary control area required by *WAC 246-290-135*. This protective area should already be tightly controlled by the purveyor to minimize direct contamination at the wellhead. The minimum sanitary control area for a well shall have a radius of 100 feet around the wellhead. The construction, storage, disposal, or application of known or potential contaminants is prohibited within this area, unless permitted by DOH and the water purveyor. The City's only active well is located on City owned property that extends beyond the minimum required sanitary control area.

Wellhead protection areas are commonly based on 1-year, 5-year, and 10-year time of travel zones. For example, a 1-year time of travel zone represents an area around the well or well field in which contaminants could reach the well within one year. Each zone has different management strategies based on the urgency of response and characteristics of risks to public health posed by contaminants within the zones. An additional zone, called "buffer zone", may also be established to provide an area of added protection outside the 10-year time of travel zone for the wellhead protection area.

Delineation Methods

There are several delineation methods that can be used, but the simplest approach is the Calculated Fixed Radius (CFR) method. This method requires the least amount of technical data and is typically used for the initial delineation for identifying immediate threats to water quality. However, the major drawback of this method is that groundwater rarely behaves as simply as predicted with this method. Applying the CFR method yields a circular boundary around each of the wells or well fields, based on the data entered into a simple volumetric flow equation. Data input includes the annual volume pumped by the well, the open interval or length of well screen, aquifer porosity, and the desired travel time (typically 6-month, 1-year, 5-year, and 10-year). Other more complex, but probably more accurate delineation methods utilize analytical models, hydrogeologic mapping, and computer flow models.

Delineation Results

The CFR method was utilized during preparation of the City's 2004 Comprehensive Water System Plan to establish the wellhead protection area boundaries. **Table 1** presents data for the

Taylor's Landing Well and the results of the CFR computations, which are based on the well's water rights information, since pumping rate information is not available. The wellhead protection area boundaries for the 6-month, 1-year, 5-year, and 10-year time of travel computations are presented in **Figure 1**.

Table 1
Well Data and Calculated Fixed Radius Values

Description	Taylor's Landing Well
Data	
Source No.	N/A
Sec-Twp-Rng	Govt Lot 4 13-26N-6E
Year Water Rights Granted	1940
Ground Elevation (ft)	48
Screened Open Interval (ft)	10
Current Pumping Rate (gpm)	0
Annual Water Right (gal)	11,404,008
Aquifer Porosity (estimated)	0.22
Calculated Fixed Radius (CFR) Value	
6 Month Time of Travel (ft)	332
1 Year Time of Travel (ft)	470
5 Year Time of Travel (ft)	1,050
10 Year Time of Travel (ft)	1,485

Figure 1
Wellhead Protection Area and Calculated Fixed Radius Values

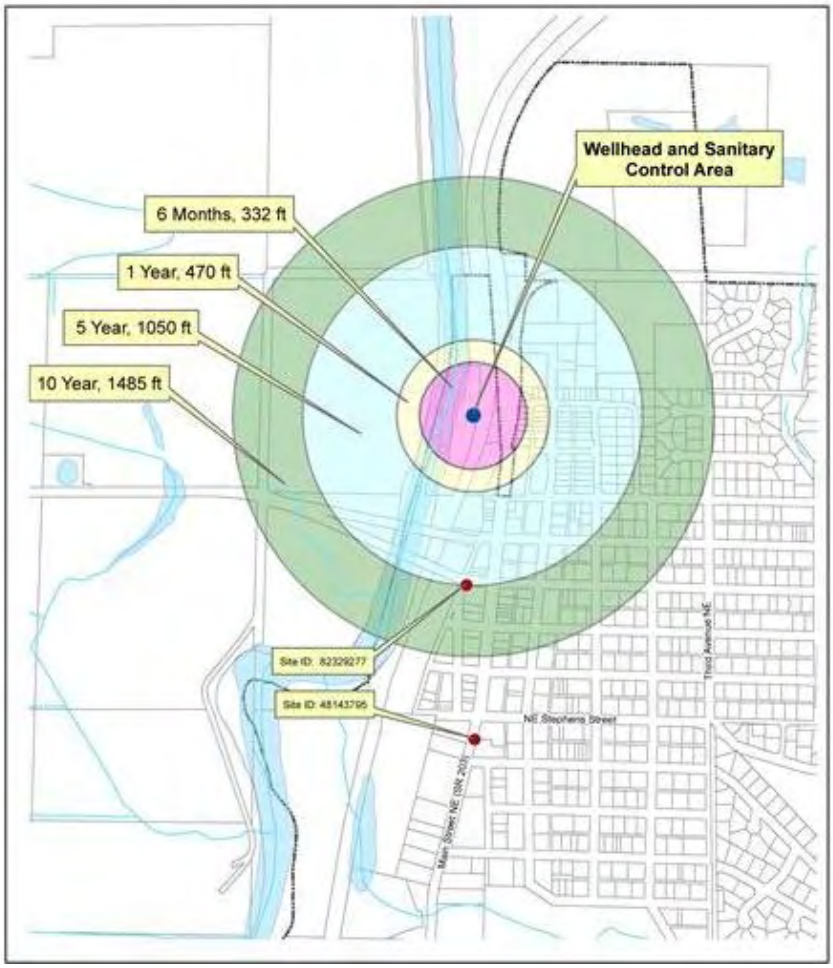

Delineation Update Requirements

DOH recommends water systems with a low or moderate susceptibility rating upgrade their initial delineation using a more sophisticated groundwater flow model approach within five years following the initial delineation. If the water system has a high susceptibility rating, DOH recommends upgrading their initial delineation within two years following the initial delineation. In addition, wellhead protection area boundaries should be reviewed and revised when new wells are brought on-line or when there is a change in the annual volume pumped from a well. DOH recommends re-evaluation of the wellhead protection area boundaries during the update of the Comprehensive Water System Plan, which occurs on a 6-year schedule.

There was been no appreciable change in either the use or demand of the wellhead, or the land uses and ownership adjacent to the wellhead. At this time the City is not proposing any revisions to the wellhead protection boundaries established in 2004.

INVENTORY OF POTENTIAL CONTAMINANT SOURCES

An essential element of wellhead protection is an inventory of all potential sources of groundwater contamination throughout the delineated wellhead protection areas. The purpose of the inventory is to identify past, present, and proposed activities that may pose a threat to the source of water supply (i.e., the aquifer). An initial inventory of a wellhead protection program should include, at a minimum, all potential sources of contamination within the 1-year time of travel zone and high risk potential contaminant sources within the 10-year time of travel zone.

Inventory Approach

An inventory of potential sources of groundwater contamination was conducted in 2011 during preparation of the City's 2011 Comprehensive Water System Plan. Several databases maintained by the Washington State Department of Ecology (Ecology) and the United States Environmental Protection Agency (EPA) were searched for known and potential contaminant sources.

The inventory efforts completed to date have been somewhat limited, due to budget limitations and the inactivity of the well site. Prior to any future resumption of potable uses of the well site; the City will complete a more detailed inventory of potential sources of groundwater contamination.

Inventory Findings

The inventory that was performed revealed several potential sources of contamination located within a broad area around the well. The approximate location of two sites is shown in **Figure 1** and a list of the potential sources of contamination is shown in **Table 2**. Only one of these potential sources is located within the 10-year time of travel zone of the Taylor's Landing wellhead protection area, as shown in **Figure 1**. All of the potential sources of contamination were found on the Ecology Leaking Underground Storage Tank List.

Table 2
Potential Sources of Contamination

Site ID	Name	Address	Material Stored	WHPA
82329277	Valley Shell	15729 Main St. NE Ste. A	Diesel/Unleaded Fuels	Inside 10 year
48143795	Farwest Petroleum Company	15410 Main St. NE	Unleaded Fuels	Outside 10 year
101082	Harding & Sons (INACTIVE)	14441 Main St. NE	Diesel/Unleaded Fuels and Used Oil	Outside 10 year
618917	Safeway Fuel 1572	14020 Main St. NE	Diesel/Unleaded Fuels	Outside 10 year
Source: Department of Ecology Leaking and Underground Storage Tank Lists				

Other typical potential sources of contamination that are not specifically shown in **Figure 1** or

listed in **Table 2** are discussed below. A further investigation of these will be conducted during future inventory efforts.

Hazardous Spills on Highways – State Route 203 passes through the 6-month, 1-year, 5-year and 10-year time of travel zones of the Taylor's Landing Well Wellhead Protection Area. Automobile accidents within this section of Highway 203 could result in spills of gasoline or other transported hazardous materials that would threaten the aquifer of the well.

Pesticide and Herbicide Use along Roads – Pesticides and herbicides are typically applied along county roads by King County and along state highways by the Washington State Department of Transportation. Although the chemicals in pesticides and herbicides are a potential source of contamination to the Taylor's Landing Well, the proper application of them will most likely avoid contaminating the groundwater.

Septic Systems – Septic systems for wastewater disposal and treatment are found in areas of the City that are not served by the City's sewage collection system. The ability to remove pollutants from the discharge of these systems depends on the type of the surrounding soil. In addition, septic systems may be unlawfully used for disposal of toxic materials. These onsite sewage disposal systems, which typically consist of a septic tank and drainfield, could pose a threat to the City's groundwater source. However, the City's existing map of properties served by septic systems shows that no septic systems are located within the 10-year time of travel zone.

Home Oil Furnace Tanks – Some residents in the Duvall area may be using oil furnaces to heat their homes. The number and location of these is unknown. The fuel for oil furnaces can be stored in above-grade or buried tanks. The City's groundwater source may be threatened by heating oil that leaks out of the tanks into the underlying soil. The risk of this potential contaminant depends on the location of leaking tanks relative to the City's wells, the amount and rate of leakage, and the type of underlying soil. Since no home oil furnace tanks are known to exist within the Wellhead Protection Area there is little risk of this type of contamination occurring.

Hazardous Household Materials – Almost all households have hazardous materials that are commonly used for a variety of cleaning and maintenance purposes. Some of these materials include cleaning solvents, paints, antifreeze, and engine oil. Improper use or disposal of these may result in contamination of the City's groundwater source. The Taylor's Landing Well is located in an area that has several single family residences within its wellhead protection area.

Private Wells – Poorly constructed private wells with inadequate seals and improperly abandoned wells may pose a threat to the City's groundwater source. Poorly constructed private wells with insufficient seals provide a direct pathway for contaminants from stormwater runoff, rodents, insects, and other pollutants to enter the aquifer used by the City's well.

Stormwater – Stormwater runoff can potentially contaminate the City's groundwater source. Runoff from industrial and commercial areas can contain high levels of metals and hydrocarbons. Runoff from residential areas is typically high in nutrients, pesticides, and metals. As development of new housing areas in Duvall occurs more stormwater will need to be detained, likely through stormwater detention ponds. There are several areas of recent and upcoming land development within the Taylor's Landing Well wellhead protection area.

Water Courses – Water courses located within wellhead protection areas can carry contaminants that may pose a threat to the City's groundwater source. The Snoqualmie River is the largest water course within the Duvall area. The mainstream of the Snoqualmie River is located within the Taylor's Landing Well's 6-month, 1-year, 5-year, and 10-year time of travel zone.

Agricultural Practices – Ranches within the wellhead protection areas can be a threat to the City's groundwater source. Inadequate cleanup of animal waste is the most likely source of potential contamination found on ranches.

Inventory Update Requirements

In accordance with *WAC 246-290-135*, the inventory list of actual and potential groundwater contaminant sources located within the delineated wellhead protection areas must be updated every two years. The timing of the updates will be scheduled such that every third update is accomplished at the same time as the re-evaluation of the wellhead protection area boundaries that is required during each 6-year Comprehensive Water System Plan update. The inventory list of actual or potential groundwater contaminant sources was updated in July 2011.

NOTIFICATION OF INVENTORY FINDINGS

Owners and operators of known and potential sources of groundwater contamination will be notified of their location within the delineated wellhead protection areas. In addition, all water customers will be notified (via a billing insert) of the City's potential groundwater source, the Wellhead Protection Program, and the importance of protecting the City's potential sources. Regulatory agencies, local governments, and emergency response agencies will also be notified of the location of the wellhead protection areas, contaminant source inventory findings, contingency plans, and emergency response procedures. **Table 3** lists all of the recipients that will be receiving these notifications. An example of each of the four types of notification letters that will be sent is attached.

Table 3
Notification Recipients

Agency or Business	Mailing Address	City, State Zip
Businesses within Wellhead Protection Area		
Valley Shell, Owner	15729 NE Main Street	Duvall, WA 98019
Regulatory Agencies and Local Governments		
WA State Dept. of Health	20435 72nd Ave S, Suite 200	Kent, WA 98032
WA State Dept. of Ecology	3190 160th Ave SE	Bellevue, WA 98008
City of Duvall, Planning Dept.	PO Box 1300	Duvall, WA 98019
City of Duvall Water Customers		

As Appropriate	Varies	Duvall, WA 98019

CONTINGENCY PLANNING

An Emergency Response Plan has been developed as part of the City's Comprehensive Water System Plan. The Emergency Response Plan includes a contingency operation plan for the well and other water system facilities. The contingency operation plan for the well in the event of contamination of the water source is as follows.

Emergency Condition : Aquifer Contamination

Impact on System : Minor impact. Water not suitable for potable use - loss of supply. The City currently uses two connections to Seattle Public Utilities Tolt Supply Line for supply. Taylor's Landing Well would most likely be used to supplement water received from the Tolt Supply Line. If the aquifer were to be contaminated, the well could be shut down with minimal impact to the City's water customers.

Emergency Response :

1. Shut down the well that pumps water from the aquifer that is contaminated and use the other water source.
2. Notify DOH of the aquifer contamination.
3. Notify all customers of the problem and instruct them to boil all water to be used for consumption and cooking, as necessary.
4. Analyze water quality of water within reservoirs and dispose of properly if contaminated.
5. Disinfect reservoirs and water mains, as necessary, to remove contaminated residuals.
6. Adjust control of system facilities, as necessary, to provide supply from storage facilities if water within them is not contaminated.
7. Monitor water quality at affected well field and investigate cause of contamination.
8. Contact Seattle Public Utilities to request additional supply from the Tolt Supply Line, if required.
9. Implement water use reduction measures, as necessary, to ensure an adequate supply of water.

PROGRAM IMPLEMENTATION AND RECOMMENDATIONS

The City of Duvall Wellhead Protection Program is an ongoing effort that requires staffing and resources to ensure its effectiveness in protecting a potential source of future drinking water. As discussed previously in this document, the regulations require that the City complete a

Susceptibility Assessment Survey Form as well as perform an inventory of all potential sources of groundwater contamination throughout the delineated wellhead protection areas every two years. In addition, DOH recommends water systems using the calculated fixed radius method, like the City of Duvall, upgrade their initial delineation using a more sophisticated groundwater flow model approach within two or five years following the initial delineation, depending on their susceptibility rating. At a minimum, the City must re-evaluate the wellhead protection area boundaries during the Comprehensive Water System Plan update process, which occurs every six years.

The following tasks will be pursued as part of the City's on-going Wellhead Protection Program and completed prior to utilizing the well for potable purposes:

- Develop and adopt a wellhead protection ordinance that addresses permitted uses and performance standards for properties located within designated wellhead protection areas.
- Complete and submit a *Susceptibility Assessment Survey Form* to DOH.
- Perform a more accurate delineation of the wellhead protection area boundaries utilizing analytical models, hydrogeologic mapping, and computer flow models.
- Perform a more detailed inventory of potential sources of groundwater contamination.
- Confirm location, condition, and proper closure of abandoned private wells, especially those within 1-year time of travel zones.
- Distribute the required notifications of delineations and inventory findings.
- Develop and distribute public education materials within the wellhead protection areas to address groundwater protection and household, landscape, and gardening practices that could affect groundwater quality. Coordinate with and utilize existing information developed by King County and DOH.
- Establish a Wellhead Protection Committee to promote public education and awareness of the City's groundwater source and contaminant prevention. Coordinate these efforts with the regional agencies.
- Restrict land uses in the 1-year time of travel zones that pose a high risk to groundwater, such as gas stations, oil recycling, dry cleaners, fuel storage facilities, high density animal keeping, high density septic systems, and golf courses. Coordinate these efforts with King County.
- Develop signage at the perimeter of and at strategic locations around the wellhead protection areas to inform people that they are entering an area that contains a potential drinking water source that is vulnerable to surface activities.

APPENDIX K

Water Right Certificate & Self-Assessment Forms

Washington State Department of Health
Division of Environmental Health
Office of Drinking Water

Table 1

WATER SYSTEM PLAN
WATER RIGHTS SELF ASSESSMENT – EXISTING STATUS

PERMIT CERTIFICATE OR CLAIM #	NAME ON DOCUMENT	PRIORITY DATE (List oldest first)	SOURCE NAME/ NUMBER	ANY PORTION SUPPLEMENTAL? (If yes, explain in footnote)	EXISTING WATER RIGHTS		EXISTING CONSUMPTION		CURRENT WATER RIGHT STATUS (Excess/Deficiency)	
					Maximum Instantaneous Flow Rate (Qi)	Maximum Annual Volume (Qa)	Maximum Instantaneous Flow Rate (Qi)	Maximum Annual Volume (Qa)	Maximum Instantaneous Flow Rate (Qi)	Maximum Annual Volume (Qa)
Permits/ Certificates 1. **674 D***	**Town of Duvall**	**4/8/1940**	**N/A**	**Primary**	**65**	**35**	**5**	**0.15**	**60**	**34.85**
Claims 1.										
TOTAL	**********	*********	*********	**********	**65 gpm**	**35 af**	**5 gpm**	**0.15 af**	**60 gpm**	**34.85 af**

INTERTIE NAME/ IDENTIFIER	NAME OF PURVEYOR PROVIDING WATER	EXISTING LIMITS ON INTERTIE USE		EXISTING CONSUMPTION THROUGH INTERTIE		CURRENT INTERTIE SUPPLY STATUS (Excess/Deficiency)	
		Maximum Instantaneous Flow Rate (Qi)	Maximum Annual Volume (Qa)	Maximum Instantaneous Flow Rate (Qi)	Maximum Annual Volume (Qa)	Maximum Instantaneous Flow Rate (Qi)	Maximum Annual Volume (Qa)
1. **Tolt 1 Supply Station**	**Seattle Public Utilities**	**1800 gpm**	**Not restricted**	**1,525 gpm**	**2,460 af**	**N/A**	
2. **Tolt 2 Supply Station**	**Seattle Public Utilities**	**Not restricted**		**-**	**-**	**N/A**	
TOTAL	**********						

PENDING WATER RIGHT APPLICATION (New/Change)	NAME ON APPLICATION	DATE SUBMITTED	ANY PORTION SUPPLEMENTAL? (If yes, explain in footnote)	PENDING WATER RIGHTS	
				Maximum Instantaneous Flow Rate (Qi) Requested	Maximum Annual Volume (Qa) Requested
1.					
2.					
3.					
4.					

**** This water right is not used for consumption and is occasionally used for irrigation purposes only. All potable water supply is provided by SPU.***

If you need this publication in an alternate format, call (800) 525-0127. For TTY/TDD call (800) 833-6388.

To return form, please see reverse side.

Please return completed form to the Office of Drinking Water regional office checked below.

☐ Northwest Drinking Water
Department of Health
20435 72nd Ave S, Suite 200
Kent, WA 98032-2358
Phone: (253) 395-6750
Fax: (253) 395-6760

☐ Southwest Drinking Water
Department of Health
PO Box 47823
Olympia, WA 98504-7823
Phone: (360) 236-3030
Fax: (360) 664-8058

☐ Eastern Drinking Water
Department of Health
16201 E Indiana Ave, Suite 1500
Spokane Valley, WA 99216
Phone: (509) 329-2100
Fax: (509) 329-2104

Washington State Department of Health
Division of Environmental Health
Office of Drinking Water

Table 2

WATER SYSTEM PLAN
WATER RIGHTS SELF ASSESSMENT – 6 YEAR FORECAST

PERMIT CERTIFICATE OR CLAIM #	NAME ON DOCUMENT	PRIORITY DATE (List oldest first)	SOURCE NAME/ NUMBER	ANY PORTION SUPPLEMENTAL? (If yes, explain in footnote)	EXISTING WATER RIGHTS		FORECASTED WATER USE FROM SOURCES (6-year Demand)		FORECASTED WATER RIGHT STATUS (Excess/Deficiency)	
					Maximum Instantaneous Flow Rate (Qi)	Maximum Annual Volume (Qa)	Maximum Instantaneous Flow Rate (Qi)	Maximum Annual Volume (Qa)	Maximum Instantaneous Flow Rate (Qi)	Maximum Annual Volume (Qa)
Permits/ Certificates 1. **674 D***	**Town of Duvall**	**4/8/1940**	**N/A**	**Primary**	**65**	**35**	**5**	**0.15**	**60**	**34.85**
Claims 1.										
TOTAL	**********	*********	*********	**********	**65 gpm**	**35 af**	**5 gpm**	**0.15 af**	**60 gpm**	**34.85 af**

INTERTIE NAME/ IDENTIFIER	NAME OF PURVEYOR PROVIDING WATER	EXISTING LIMITS ON INTERTIE USE		FORECASTED CONSUMPTION THROUGH INTERTIE		FORECASTED INTERTIE SUPPLY STATUS (Excess/Deficiency)	
		Maximum Instantaneous Flow Rate (Qi)	Maximum Annual Volume (Qa)	Maximum Instantaneous Flow Rate (Qi)	Maximum Annual Volume (Qa)	Maximum Instantaneous Flow Rate (Qi)	Maximum Annual Volume (Qa)
1. **Tolt 1 Supply Station**	**Seattle Public Utilities**	**1,800 gpm**	**Not restricted**	**1,592 gpm**	**2,568 af**	**N/A**	
2. **Tolt 2 Supply Station**	**Seattle Public Utilities**	**Backup**		**-**	**-**	**N/A**	
TOTAL	**********						

PENDING WATER RIGHT APPLICATION (New/Change)	NAME ON APPLICATION	DATE SUBMITTED	ANY PORTION SUPPLEMENTAL? (If yes, explain in footnote)	PENDING WATER RIGHTS	
				Maximum Instantaneous Flow Rate (Qi) Requested	Maximum Annual Volume (Qa) Requested
1.					
2.					
3.					
4.					

**** This water right is not used for consumption and is occasionally used for irrigation purposes only. All potable water supply is provided by SPU.***

If you need this publication in an alternate format, call (800) 525-0127. For TTY/TDD call (800) 833-6388.

DOH Form 331-372 (Updated 08/10)

To return form, please see reverse side.

Please return completed form to the Office of Drinking Water regional office checked below.

☐ Northwest Drinking Water
Department of Health
20435 72nd Ave S, Suite 200
Kent, WA 98032-2358
Phone: (253) 395-6750
Fax: (253) 395-6760

☐ Southwest Drinking Water
Department of Health
PO Box 47823
Olympia, WA 98504-7823
Phone (360) 236-3030
Fax: (360) 664-8058

☐ Eastern Drinking Water
Department of Health
16201 E Indiana Ave, Suite 1500
Spokane Valley, WA 99216
Phone: (509) 329-2100
Fax: (509) 329-2104

Washington State Department of Health
Division of Environmental Health
Office of Drinking Water

Table 3

WATER SYSTEM PLAN
WATER RIGHTS SELF ASSESSMENT – 20 YEAR FORECAST

PERMIT CERTIFICATE OR CLAIM #	NAME ON DOCUMENT	PRIORITY DATE (List oldest first)	SOURCE NAME/ NUMBER	ANY PORTION SUPPLEMENTAL? (If yes, explain in footnote)	EXISTING WATER RIGHTS		FORECASTED WATER USE FROM SOURCES (20-year Demand)		FORECASTED WATER RIGHT STATUS (Excess/Deficiency)	
					Maximum Instantaneous Flow Rate (Qi)	Maximum Annual Volume (Qa)	Maximum Instantaneous Flow Rate (Qi)	Maximum Annual Volume (Qa)	Maximum Instantaneous Flow Rate (Qi)	Maximum Annual Volume (Qa)
Permits/ Certificates 1. 674 D*	**Town of Duvall**	**4/8/1940**	**N/A**	**Primary**	**65**	**35**	**5**	**0.15**	**60**	**34.85**
Claims 1.										
TOTAL	**********	*********	*********	**********	**65 gpm**	**35 af**	**5 gpm**	**0.15 af**	**60 gpm**	**34.85 af**

INTERTIE NAME/ IDENTIFIER	NAME OF PURVEYOR PROVIDING WATER	EXISTING LIMITS ON INTERTIE USE		FORECASTED CONSUMPTION THROUGH INTERTIE		FORECASTED INTERTIE SUPPLY STATUS (Excess/Deficiency)	
		Maximum Instantaneous Flow Rate (Qi)	Maximum Annual Volume (Qa)	Maximum Instantaneous Flow Rate (Qi)	Maximum Annual Volume (Qa)	Maximum Instantaneous Flow Rate (Qi)	Maximum Annual Volume (Qa)
1. **Tolt 1 Supply Station**	**Seattle Public Utilities**	**1,800 gpm**	**Not restricted**	**1,940 gpm**	**3,129 af**	**N/A**	
2. **Tolt 2 Supply Station**	**Seattle Public Utilities**	**Backup**		**-**	**-**	**N/A**	
TOTAL	**********						

PENDING WATER RIGHT APPLICATION (New/Change)	NAME ON APPLICATION	DATE SUBMITTED	ANY PORTION SUPPLEMENTAL? (If yes, explain in footnote)	PENDING WATER RIGHTS	
				Maximum Instantaneous Flow Rate (Qi) Requested	Maximum Annual Volume (Qa) Requested
1.					
2.					
3.					
4.					

**** This water right is not used for consumption and is occasionally used for irrigation purposes only. All potable water supply is provided by SPU.***

If you need this publication in an alternate format, call (800) 525-0127. For TTY/TDD call (800) 833-6388.

DOH Form 331-373 (Updated 08/10)

To return form, please see reverse side.

Please return completed form to the Office of Drinking Water regional office checked below.

☐ Northwest Drinking Water
Department of Health
20435 72nd Ave S, Suite 200
Kent, WA 98032-2358
Phone: (253) 395-6750
Fax: (253) 395-6760

☐ Southwest Drinking Water
Department of Health
PO Box 47823
Olympia, WA 98504-7823
Phone (360) 236-3030
Fax: (360) 664-8058

☐ Eastern Drinking Water
Department of Health
16201 E Indiana Ave, Suite 1500
Spokane Valley, WA 99216
Phone: (509) 329-2100
Fax: (509) 329-2104

APPENDIX L

Water Quality Monitoring Plan

CITY OF DUVALL

Water Quality Monitoring Plan

INTRODUCTION

This Water Quality Monitoring Plan presents the requirements for monitoring water quality in the City of Duvall's (City) distribution system in accordance with the drinking water regulations contained in *WAC 246-290-300*. This plan also provides a summary of the existing water system facilities and system operation.

EXISTING WATER SYSTEM DESCRIPTION

Water System Information

The City is a municipal corporation that owns and operates a public water system within its corporate boundaries. Water system data on file at the Department of Health (DOH) for the Duvall system is as follows:

System Type	Group A - Community - Public Water System
System Name	City of Duvall
County	King
DOH System ID Number	207508
Owner Number	1625
Address	15525 Main Street NE Duvall, WA 98019
Contact	Mr. Steven Leniszewski, P.E.; Public Works Director
Contact Phone Number	425-788-3434

Water System Operation and Control

The existing water system is divided into five pressure zones, due to the wide range of elevations that are served (between 55 feet and 500 feet). All water supply is provided through two metered connections from Seattle Public Utilities (SPU) Tolt Pipeline No. 1 that follows an alignment directly south of the City. The Tolt 1 Supply Station provides water to the 615 Zone and indirectly fills the 0.5 MG Crestview Estates Reservoir in the 555 Zone through an altitude control valve at the reservoir site. Water from the Tolt 1 supply station can also indirectly fill the 450 Zone's 2.2 MG Big Rock Road Reservoir through an altitude control valve at the reservoir site. The Tolt 2 Supply Station provides water directly to the 450 Zone and the Big Rock Road Reservoir. The settings of the supply facilities and water usage throughout the system dictate the amount of water either flowing into or out of the reservoirs. When necessary the 615 Zone Booster Pump Station can draw water from the 450 Zone Big Rock Road

Reservoir, and pump it into the closed 615 Zone (i.e., no storage within the zone). This process allows the 615 Zone to both meet demands and to supply water to the 0.5 MG Crestview Estates Reservoir when the altitude valve opens for filling the reservoir. The 485 Zone and the 330 Zone are supplied by pressure reducing stations with water that originates from the 555 and 450 Zones, respectively. As planned, the 485 Zone will be incorporated into the 555 Zone to improve looping and service.

Pressure Zones

A list of the City's existing pressure zones, average day demand (ADD), and their respective total percent of demand is presented in **Table 1** and further described in Chapter 4. The maximum hydraulic elevation is reflected in the name of each pressure zone.

Table 1
Pressure Zones

Pressure Zone	2009 Annual Supply (gallons)	Average Day Demand (gpm)	Average Day Demand (MGD)	Percent of Total Demand (%)
615	70,392,904	134	0.19	37.1%
555	55,920,823	106	0.15	29.5%
485	1,957,414	4	0.01	1.0%
450	24,269,240	46	0.07	12.8%
330	37,066,421	71	0.10	19.5%
Total	189,606,802	361	0.52	100%

Water Sources

The City's existing active water source is presented below in **Table 2**. All of the City's water is currently purchased from Seattle Public Utilities.

Table 2
Water Sources

DOH No.	Source Name	Category	Use
S01	77050Y/Seattle	Purchase – Treated	Permanent

Water Storage

A list of the City's existing water storage facilities is presented below in **Table 3**.

Table 3
Water Storage

Name	Pressure Zone	Material	Volume (gallons)	Overflow Elv. (feet)	Current Status
Big Rock Road	450	Steel	2,200,000	450	Active
Crestview Estates	555	Steel	500,000	555	Active

Water Treatment

All water treatment is currently provided by SPU. The City's water is chlorinated to disinfect and kill harmful bacteria that may be present in the water and fluoridated to assist in the prevention of tooth decay. Additionally, filtration and ozonation of SPU's Tolt River source is provided by SPU at the Tolt Treatment Facility.

Pump Stations

The 615 Zone Booster Pump Station pumps water from the 450 Zone to the closed 615 Zone.

Pressure Reducing Stations

A list of the City's existing pressure reducing stations is presented below in **Table 4**.

Table 4
Pressure Reducing Stations

PRV Name	Upper Pressure Zone	Lower Pressure Zone	Ground Elv. (feet)	Normal Pressure		Station Status
				Inlet (PSI)	Outlet (PSI)	
Kennedy Drive	450	330	213	99	54	Active
26500 NE 145th	450	330	168	118	73	Active
3rd & Virginia	450	330	222	95	50	Active
143rd & 268th	450	330	235	89	44	Active
NE Big Rock Road	450	330	173	116	71	Active
Stephens St & Broadway	450	330	188	110	65	Active
272nd & 143rd	555	450	300	106	63	Active
Sunset Heights 144th	555	450	292	109	67	Active
Millers Homestead	555	450	317	98	56	Active
Bruett Road	555	450	320	97	55	Active
Kasper Heights	555	485	360	80	56	Active
275th & 141st	555	485	336	90	66	Active
150th & 278th	615	555	436	77	49	Active
Manion & 156th	615	555	434	78	50	Active

282nd &140th	615	555	406	90	62	Active

SOURCE WATER QUALITY MONITORING

The quality of drinking water in the City's water system is regulated by the requirements that are contained in Chapter 246-290 of the Washington Administrative Code (WAC). Since all water is supplied to Duvall from SPU, the City relies on the personnel and procedures of SPU to provide a reliable and high-quality supply of water to the City's system. SPU is responsible for the quality of the water from the source to the City's two metered supply connections, whereas the City is responsible for the quality of the water within the City's water distribution system.

SPU is required to perform water quality monitoring at each of the two active sources for inorganic chemical and physical substances, organic chemicals, unregulated inorganic and organic chemicals, and radionuclides. The water quality laboratory of SPU routinely monitors the quality of water at the Cedar and Tolt River sources for these substances and subsequently reports the results to Duvall and its other regional supply customers.

DISTRIBUTION SYSTEM WATER QUALITY MONITORING

The City is required to perform water quality monitoring within the distribution system for coliform bacteria, disinfectant (chlorine) residual concentration, lead and copper, and trihalomethanes in accordance with *WAC 246-290*. However, most of the City's required monitoring and testing is accomplished by SPU.

Monitoring Requirements and Procedures

Coliform Bacteria Routine Sampling – SPU provides coliform monitoring of the City's water system as part of its regional monitoring program. Specific requirements are contained in *WAC 246-290-300*. Duvall receives all of its water from SPU, which has an agreement with DOH that allows purveyors using water supplied by SPU to collect 70 percent of the samples required. Based on the population served by the City, a minimum of six (6) coliform samples are required each month; however, SPU's agreement with DOH reduces the minimum number of samples per month to five (5). If a coliform presence is detected in an SPU sample, repeat samples must be taken by the City in accordance with the repeat sampling discussion below.

Table 5 lists the addresses of the City's routine sampling locations, including upstream and downstream sampling locations in the event that repeat sampling is necessary. The sample sites are also shown in **Figure 1** and correspond to the assigned numbers in the table. A total of five samples are collected at each location for DU-1 and DU-2 each month.

Table 5
Coliform Monitoring Sampling Locations

Number	Address	Pressure Zone
DU-1	Intersection of 3rd Ave NE and NE Stewart St	450
*DU-1R1	15826 3rd Ave NE (Residence)	450
*DU-1R2	26804 NE Cherry St (Residence)	450
DU-2	28522 NE 151st St	615
*DU-2R1	28518 NE 153rd St (Residence)	615
*DU-2R2	15217 286th Avenue NE (Residence)	615
Repeat sampling sites		

Coliform Bacteria Repeat Sampling – The City is responsible for follow-up or repeat sampling if samples collected by SPU test positive for coliforms. In the event that a sample tests positive for coliform, a repeat sample shall be taken at the same location as the suspect sample and two additional samples shall be taken within five service connections upstream and downstream of the suspect sample. These repeat samples shall be taken by the end of the next business day after receiving the unsatisfactory results. If the results conclude that a maximum contaminant level (MCL) is exceeded (i.e., coliform are present in two or more samples for the month, including repeat samples), the City shall proceed with public notification in accordance with Part 7 of WAC 246-290.

Disinfectant Residual Concentration – Specific requirements are contained in *WAC 246-290-662* for disinfectant residual concentration monitoring. The samples collected by SPU for coliform analysis are also analyzed for residual disinfectant concentration by the SPU Water Quality Laboratory. The minimum residual disinfectant concentration entering the City's distribution system should be at least 0.2 mg/L. Samples taken within the distribution system are required to have a residual disinfectant concentration that is detectable in at least 95 percent of the samples taken each calendar month.

Asbestos – Specific requirements are contained in 40 CFR 141.23(b). The current maximum contaminant level for asbestos is seven million fibers per liter and greater than ten microns in length. The City has been granted an asbestos monitoring waiver by DOH because the system has less than 10% AC (asbestos cement) pipe and all water is purchased from SPU.

Fluoride Concentration – Specific requirements are contained in *WAC 246-290-460* for systems that are fluoridating drinking water. SPU currently fluoridates the City's water supply and is therefore required to maintain fluoride concentration in the range of 0.8 through 1.3 mg/L. Determinations of fluoride concentrations shall be made daily by SPU, and reports of the analyses shall be submitted to DOH within ten days of the end of the reporting month. Monthly

check samples shall be taken downstream of each fluoride injection point by SPU, at the first sample tap where adequate mixing has occurred.

Disinfection By-Products – SPU provides disinfection by-products monitoring of the City's water system as part of its regional water quality monitoring program. Specific requirements are contained in *WAC 246-290-300*.

Lead and Copper – Specific requirements are contained in Title 40, Parts 141.86, 141.87, and 141.88 of the Code of Federal Regulations (CFR). The City participates in SPU's regional lead and copper monitoring program. The City regularly obtained samples within the water service area for the regional monitoring program between 2003 and 2008 and submitted the samples to the SPU Water Quality Laboratory for analysis. SPU is expected to resume lead and copper monitoring in the summer of 2011.

Duvall provides information on lead and copper to customers in their annual drinking water quality report to comply with public notification requirements for lead and copper.

The new Lead and Copper monitoring requirements implemented at the State level and becoming effective October 1, 2011 are not expected to affect the City. SPU currently performs Lead and Copper testing and the City already provides information to it's customers in the annual Consumer Confidence Report (CCR).

2010 ANNUAL ANALYSIS OF CEDAR & TOLT WATER SUPPLIES

Distribution Water Quality *(unless otherwise noted)*

Samples Collected: June 8, 2010 *(unless otherwise noted)*

Cedar Distribution = South of the ship canal & lower elevations North of ship canal. Tolt Distribution = Higher elevations North of the ship canal.

Water Quality Parameter	State Dept. of Health Maximum Contaminant Level	CEDAR	TOLT	Minimum Reporting Level
Primary Standards *	**MCL**			
Antimony	6 µg/L	ND	ND	0.5
Arsenic	10 µg/L	ND	ND	0.5
Asbestos $	7 million fibers/L (>10um long)	ND (2009)	ND (2009)	0.2
Barium	2000 µg/L	2.1	2.0	0.2
Beryllium	4 µg/L	ND	ND	0.2
Bromate #	10 µg/L	ND (6/02/10)	ND(6/03/10)	5.0
Cadmium	5 µg/L	ND	ND	0.2
Chromium	100 µg/L	ND	ND	1.0
Cyanide	200 µg/L	ND	ND	10
Fluoride	4 mg/L	0.96	1.04	0.10
Haloacetic Acids(5), Total~	60 µg/L	20	28	1.0
Mercury	2 µg/L	ND	ND	0.2
Nickel	100 µg/L	ND	ND	0.5
Nitrate-Nitrogen	10 mg/L	0.019	0.130	0.01
Nitrite-Nitrogen	1 mg/L	ND	ND	0.002
Selenium	50 µg/L	ND	ND	0.8
Thallium	2 µg/L	ND	ND	0.2
Trihalomethanes, Total~	80 µg/L	28	33	0.5
Turbidity #	5 NTU for Cedar/ 0.30 NTU for Tolt	0.29	0.11	0.05
Secondary Standards **	**SMCL**			
Aluminum	50 - 200 µg/L	12	30	1.0
Chloride	250 mg/L	3.6	2.8	0.5
Color	15 std. units	ND	ND	5
Fluoride	2 mg/L	0.96	1.04	0.10
Iron	300 µg/L	66	41	6
Manganese	50 µg/L	3.4	0.7	0.5
pH, range ++	6.5 - 8.5 pH units	7.73 - 8.58	8.26 - 8.48	NA
Silver	100 µg/L	ND	ND	0.8
Solids,Total Dissolved	500 mg/L	40.8	38.8	5.0
Specific Conductance	700 µmhos/cm	66.2	65.2	5.0
Sulfate	250 mg/L	1.4	1.9	1.0
Zinc	5000 µg/L	ND	ND	0.8
Other Parameters	**Units**			
Alkalinity, Total	mg/L (as $CaCO_3$)	20.2	19.2	2.0
Bromide	µg/L	ND	ND	5
Calcium	mg/L (as $CaCO_3$)	23.0	25.9	2.0
Copper, Source water	µg/L	0.8	ND	0.5
Hardness	mg/L (as $CaCO_3$)	26.9	27.4	2.0
Hardness	grains/gal. (as $CaCO_3$)	1.55	1.58	0.1
Lead, Source water	µg/L	ND	ND	0.2
Magnesium	mg/L	0.94	0.37	0.01
Oxygen, Dissolved	mg/L	11.8	18.0	0.5
Phosphate, soluable-reactive	µg/L	1.6	2.2	1
Potassium	mg/L	0.26	0.14	0.02
Silica, Reactive	mg/L	7.9	5.4	1.0
Sodium	mg/L	1.90	1.32	0.08
Temperature, normal annual range	deg. C.	4.6 - 23	3.3 - 22	NA
Total Organic Carbon #	mg/L	0.85	1.02	0.20
Residential Survey @	**Action Level**	**Combined System**		
2007 Lead Reduced Monitoring	15 µg/L	6.0		1.0
2007 Copper Reduced Monitoring	1300 µg/L	140		1.0

Primary and Secondary Standards were measured at the Intake to the distribution system after treatment.

* Health stds.: Supplier subject to public notification.

** Aesthetic stds.: Supplier not subject to public notification.

~ Average of the last 4 quarters testing, through 5/10.

ND = Not Detected at or above the Minimum Reporting Level

++ January-June 2010, 10-90th percentile

$ Test results 9/2/2009.

As measured at treatment plant.

1 ppm = 1 mg/L = 1000 µg/L

@ Measured at 90th percentile of overnight standing residential samples from homes with copper pipes and lead solder. Next round 9/2010.

Seattle Public Utilities Water Quality Laboratory, 800 S. Stacy St., Seattle 98134 (206) 684-7834

http://www.seattle.gov/util/About_SPU/Water_System/Water_Quality/index.asp

H:\EVT Projects\10\1167\Figures\ArcGIS File for Figures\FIGURE 1 mxd 9/7/2011 2:03:56 PM DKH

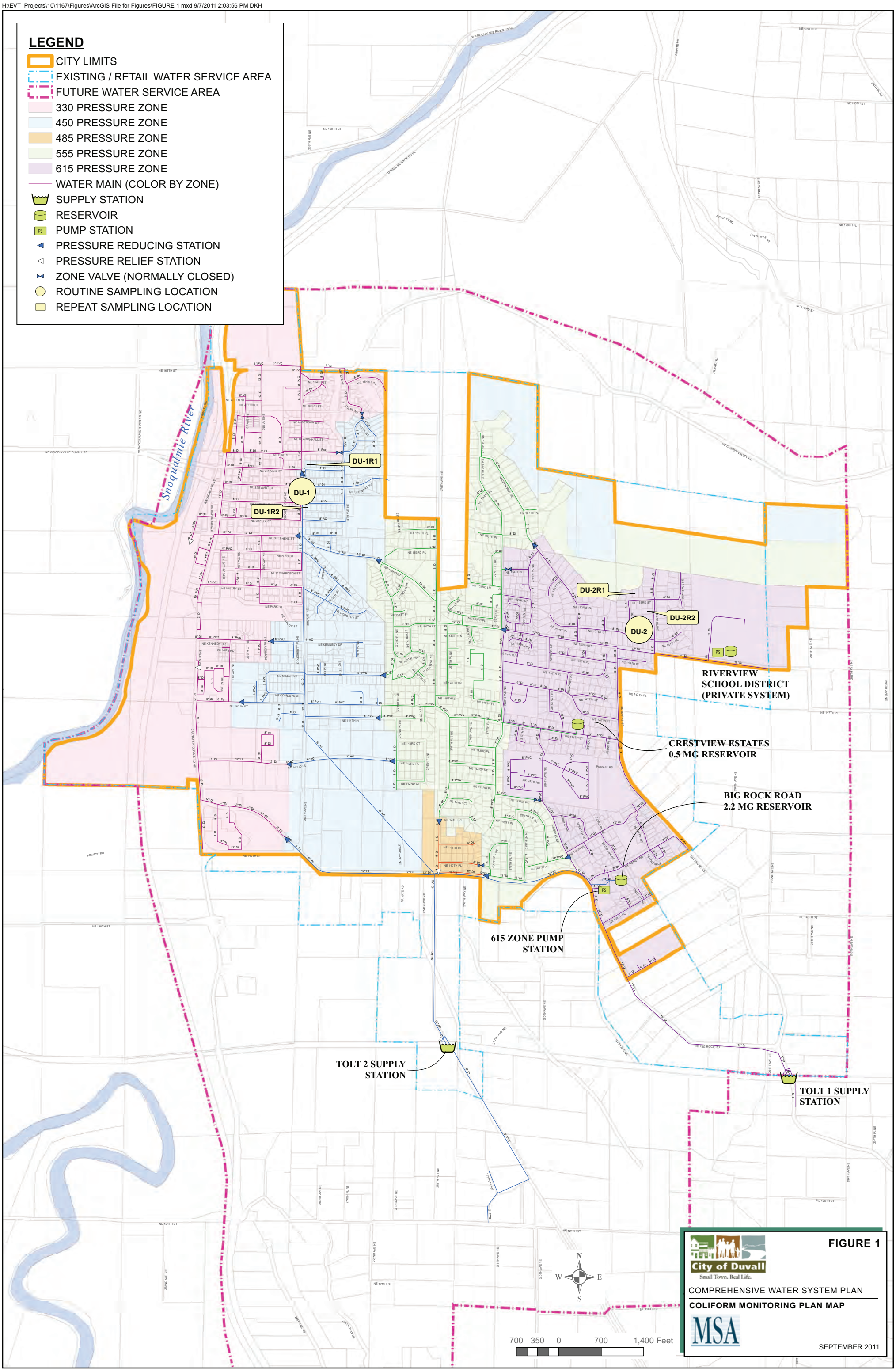

FIGURE 1

COMPREHENSIVE WATER SYSTEM PLAN

COLIFORM MONITORING PLAN MAP

SEPTEMBER 2011

APPENDIX M

Annual Water Quality Report

The City of Duvall
June 2011

2010 ANNUAL WATER QUALITY REPORT

Meeting the Challenge

We are pleased to provide you with our annual Water Quality Report. This edition covers all testing completed from January 1 through December 31, 2010. The City of Duvall operates a first-class water system. We are proud of the system, and we welcome this opportunity to tell you about it. We want you to know where your drinking water comes from and how it is treated.

We have tried to make this report easy to understand. However, drinking water quality is a complex issue and some of the information is technical. Please share with us your thoughts about the information in this report. After all, well-informed customers are our best allies.

Why We Produce This Report

The federal Environmental Protection Agency (EPA) sets regulations on water quality and ensures you are informed about your community's water quality through this required annual report. Since we are mandated to send it, we use the opportunity to share other important information as well. More importantly, we want you to know that your water is safe to drink and meets or exceeds all government standards. This information allows people, particularly those with special health needs, to make informed decisions about their drinking water. We are happy to comply because we support your right to know about the water you drink.

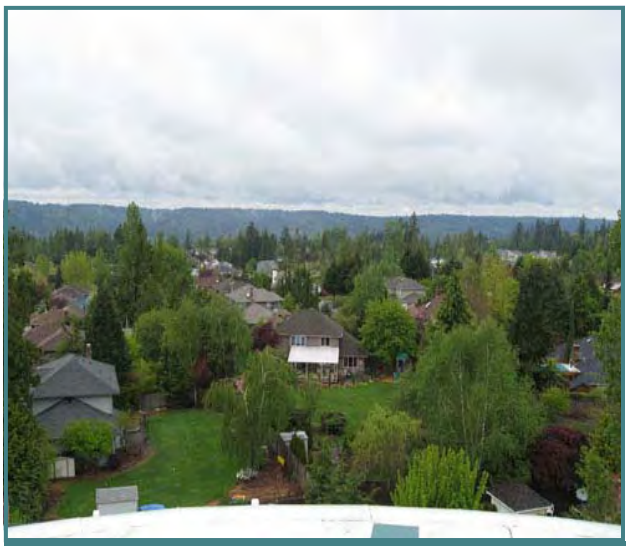

View looking west from the top of the 0 5MG tank located at NE 144th Street & 282nd Pl NE

The City is pleased to report that our drinking water is safe and meets all federal and state requirements.

Community Participation

You are invited to participate in our public City Council meetings and voice any concerns you have about your drinking water. The City Council meets the 2nd and 4th Thursdays of each month at 7:00 p.m. in the meeting room at the Duvall Fire Station, 15600 - 1st Avenue, Duvall.

Information For Your Review

The City has on file for customer review our November 2004 Water Comprehensive Plan, water quality test results, a Cross-Connection Control Plan, Development Design Standards, and the Water Shortage Response Plan. The City is currently updating the Water Comprehensive Plan and will complete the updates in 2011. A public hearing will be held to discuss the draft Water Comprehensive Plan update and it will be posted on the city's website for comment, www.duvallwa.gov.

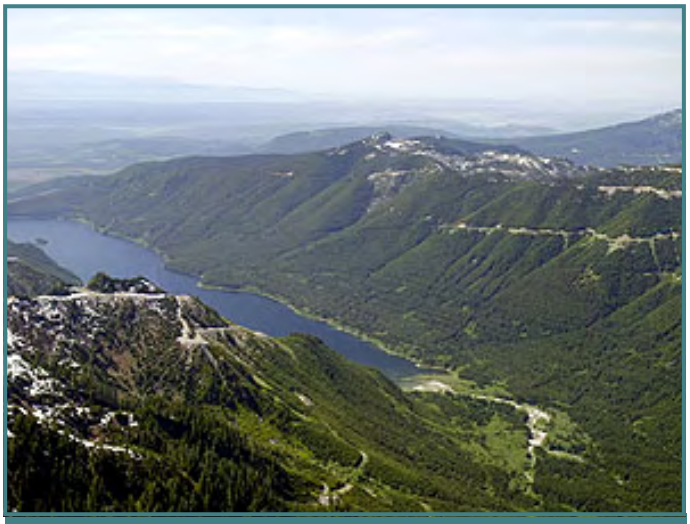

Tolt Watershed, photo courtesy of Seattle Public Utilities: *The steep slopes surrounding the Tolt Reservoir form the boundaries of the South Fork Tolt River Watershed and are being reforested to preserve water quality*

Duvall's Water System Facts

Square Miles Served: 2.5

Population Served: 6,695

- Single Family Residential: 2,195
- Multi-Family: 39
- Commercial: 84

Average Water Usage
(gallons per month 2010)

- Entire System: 13,959,799

Duvall's Water Facilities

Water Storage Capacity:

- 2.2 million gallon storage tank
- 0.5 million gallon storage tank

Miles of Water Main (pipe): 39

No. of Fire Hydrants: 346

No. of Pump Stations: 1

No. of Pressure Control Stations: 15

No. of Pressure Relief Stations: 3

Upgraded

The City installed 3,250 linear feet of water lines in 2010.

Drinking water Source

Seattle Public Utilities (SPU) provides many cities and water districts with water to supply their customers. The City of Duvall purchases all of its water from SPU. SPU has a large water main located south of the city limits in the Tolt Pipeline corridor. The City only receives water from the ***Tolt Water Supply,*** not the Cedar Water Supply.

Two transmission mains connect the City distribution system to the SPU supply system. A 1.25 mile long, ten-inch Asbestos Cement water main extends from the SPU pipeline to the intersection of Third Avenue and NE 144th Pl where it transitions to the twelve inch Ductile Iron main. A second twelve-inch Ductile Iron transmission main connects to the SPU pipeline where it crosses Big Rock Road and extends to our large storage tank off of Big Rock Road.

Water treatment

The Tolt Facility treatment process consists of a series of steps. The first step is Ozonation which is adding ozone gas, a powerful disinfectant that destroys cryptosporidium, Giardia, bacteria, and viruses and aids the filtration process. This is followed by coagulation and flocculation (gently stirring the water with small doses of chemicals to bring small particles together to form large particles that can be more easily filtered), filtration (removing the suspended solids by passing the water through a 6-foot deep bed of anthracite), chlorination (adding a secondary disinfectant to provide continued protection in the distribution system against microbial contamination), fluoridation (adding fluoride which helps prevent tooth decay), and corrosion control (adding minerals, which increase the pH and alkalinity, to help reduce corrosion in building plumbing systems). All of these processes are monitored continuously at the facility, which is staffed twenty-four hours a day. To learn more about the Tolt Treatment Facility, see SPU's website at http://www.seattle.gov/util/About_SPU/Water_System/Water_Sources_&_Treatment/Tolt_Treatment_Facility/index.asp or call their water quality information telephone at 206.615.0827.

Pipeline Right-of-Way photo courtesy of Seattle Public Utilities: *From the filtration plant, water travels to the northern and eastern portions of the service area*

The Purpose of Disinfection, and the Resulting Disinfection By-Products

Drinking water is disinfected to destroy bacteria, viruses, and Giardia (Inadequate disinfection may lead to acute gastrointestinal illnesses). However, as the disinfectant reacts with naturally occurring organic matter in the water, disinfection by-products are formed. Disinfection by-products have been linked to increased cancer risks from drinking water containing high levels (greater than the MCLs) over many years. New drinking water regulations provide a balance between required levels of disinfection and the resulting disinfection by-products. SPU's Tolt Filtration Plant improves Duvall's ability to provide a higher level of microbial protection while maintaining or reducing disinfection by-product levels.

Water Quality Monitoring

SPU staff monitors water quality in the source water, treatment processes, and distribution system 365 days a year. Various compounds are monitored at specific frequencies (continuously, daily, monthly, quarterly, or annually) and locations (prior to treatment, entering the distribution system, and throughout the distribution system) in accordance with federal and state regulations. Many of these tests confirm the absence of various contaminants. Water quality monitoring conducted between January 1 and December 31, 2010 confirmed that there were no contaminants at or above established levels of concern for the general public. Please refer to the data tables in this report for more detailed information on water quality monitoring results.

Water Clarity

Turbidity, a measure of water's clarity, has no direct health effect but indicates the overall quality of the water. High turbidity can reduce the effectiveness of disinfection. Turbidity may indicate the presence of disease-causing organisms. These organisms include bacteria, viruses, and parasites that can cause symptoms such as nausea, cramps, diarrhea, and associated headaches. SPU's source waters have very low turbidity. The unit of measurement for turbidity is the NTU (Nephelometric turbidity unit). SPU monitors source water turbidity continuously on both the Tolt and Cedar supply. For each month in 2010, 100% of the treated samples from the Tolt Treatment Facility were below 0.3 NTU.

The Regulating Basin, photo courtesy of Seattle Public Utilities:
Water from the Tolt Dam enters the Regulating Basin where it is stored before entering the transmission line

Substances That Could Be In Water

POTENTIAL	SOURCE
Microbial Contaminants	Viruses and bacteria from wildlife
Inorganic	Salts and metals which are naturally occurring
Pesticides and herbicides	Agriculture, urban stormwater runoff, residential
Organic	By-products of disinfection processes
Radioactive	Naturally occurring

To ensure that tap water is safe to drink, EPA adopts regulations setting the water quality standards for water systems.

Information on the Potential for Health Concerns Relating to Drinking Water

The sources of all drinking water (both tap water and bottled water) includes rivers, lakes, streams, ponds, reservoirs, springs, and wells. As water travels over the surface of the land or through the ground, it dissolves naturally occurring minerals and can pick up substances resulting from the presence of animals or human activity.

Drinking water, including bottled water, may reasonably be expected to contain at least small amounts of some contaminants. The presence of contaminants does not necessarily indicate that water poses a health risk. More information about contaminants and potential health effects can be obtained by calling the EPA's Safe Drinking Water Hotline at 1.800.426.4791, or from EPA's Office of Ground Water and Drinking Water web site at www.epa.gov/OGWDW.

Some people may be more vulnerable to contaminates in drinking water than the general population. Immune-compromised people such as people with cancer undergoing chemotherapy, people who have undergone organ transplants, people with HIV/AIDS or other immune system disorders, some elderly, and infants can be particularly at risk from infections. These people should seek advice about drinking water from their health care providers or the Safe Drinking Water hotline.

The table titled "Water Quality Monitoring Results' lists the contaminants detected in 2010 together with their concentrations and possible sources. The following paragraphs describe the significance of a few of these contaminants. Some tests are not required every year; for these tests, the concentrations listed are the results of the most recent testing. If you would like a copy of the list of contaminants that are monitored but were not detected in Duvall's water, please call 425.788.3434.

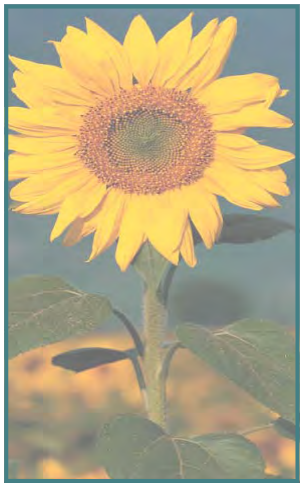

2010 Water Quality Monitoring Results: THIS IS WHAT IS IN YOUR TAP WATER

	EPA's Allowable Limits		Levels in Tolt Water	Is Your Water Safe?	
DETECTED PARAMETER & UNITS	MCLG	MCL			Typical Sources
Raw Water					
Total Organic Carbon, ppm	NA	TT	1.02	Yes	Naturally present in the environment
Cryptosporidium #/100L	NA	NA	ND	Yes	Naturally present in the environment
Finished Water					
Turbidity, NTU	NA	TT	0.11	Yes	Soil runoff
Floride, ppm	4	4	1.04	Yes	Water additive, which promotes strong teeth
Barium, ppb	2000	2000	2 0	Yes	Erosion of natural deposits
Nitrate, ppm	10	10	ND	Yes	Erosion of natural deposits
Arsenic, ppb	0	10	ND	Yes	Erosion of natural deposits
Chormium, ppb	100	100	ND	Yes	Erosion of natural deposits
Total Trihalomethanes, ppb	NA	80	33	Yes	By-products of drinking water chlorination
Haloacetic Acids (5), ppb	NA	60	28	Yes	By-products of drinking water chlorination
Total Coliform, % positive samples	0	5%	0.00%	Yes	Naturally present in the environment
E. Coli, # of samples	0	0	0	Yes	Human and animal fecal waste
Chlorine, ppm	MRDLG=4	MRDL=4	1.04	Yes	Water additive used to control microbes

DEFINITIONS

MCLG: *Maximum Contaminant Level Goal* — The level of a contaminant in drinking water below which there is no known or expected risk to health. MCLGs allow for a margin of safety.

MCL: *Maximum Contaminant Level* — The highest level of a contaminant that is allowed in drinking water. MCls are set as close to the MCLGs as feasible using the best available treatment technology.

MRDL: *Maximum Residual Disinfectant Level* — The highest level of a disinfectant allowed in drinking water. There is convincing evidence that addition of a disinfectant is necessary or control of microbial contaminants.

MRDLG: *Maximum Residual Disinfectant Level Goal* — The level of a drinking water disinfectant below which there is no known or expected risk to health. MRDLGs do not reflect the benefits of the use of disinfectants to control microbial contaminants.

TT: *Treatment Technique* — A required process intended to reduce the level of a contaminant in drinking water.

NTU: *Nephelometric Turbidity Unit* — Turbidity is a measure of how clear the water looks. The turbidity MCL that applied to the Cedar supply in 2007 is 5 NTU, and for the Tolt it was 0.3 NTU. 100% of the samples from the Tolt in 2007 were below 0.3 NTU.

NA: *Not Applicable*

ND: *Not Detected*

ppm: *1 part per million = 1 mg/L = 1 milligram per liter.*

ppb: *1 part per billion = 1ug/L = 1 microgram per liter.*

1 ppm = *1000 ppb*

Cryptosporidium

Cryptosporidium parvum is a protozoan pathogen (disease-causing organism) commonly found in the natural environment. Most rivers and streams across the country have detectable concentrations of this pathogen. Surface water sources include deer, elk, voles, and other animals in SPU watersheds. The Ozonation disinfection method at the Tolt Filtration Plant is very effective at destroying Cryptosporidium and other microbial organisms. SPU monitors for Cryptosporidium in the source water (prior to treatment). Cryptosporidium samples are not required to be collected from the Tolt supply due to removal and inactivation of Cryptosporidium by the Tolt Filtration Plant; however, SPU began collecting samples in 2005. Cryptosporidium was not detected in any of the 4 samples collected in 2010 for either the Tolt or Cedar.

Residential Tap Monitoring for Lead and Copper

Our source waters do not contain lead or copper. However, lead and copper can leach into residential water from building plumbing systems containing copper plumbing, lead-based solder, brass fixtures, or some types of zinc coatings used on galvanized pipes and fittings (individual water services, not water mains). Homes built or plumbed with copper pipe prior to the 1985 King County lead solder ban would have likely used lead-based solder, and are considered "high risk" under EPA's criteria. Brass fixtures, regardless of age, generally contain some lead. Metals can leach into building plumbing systems when water is stagnant for extended periods of time (six hours or greater).

By regulation, lead and copper monitoring is conducted at "high risk" homes. Samples are collected from these homes after the water is allowed to stand in the pipes overnight. We are required to report the "90th percentile" result of the testing. This means that 90 percent of the high-risk homes have concentrations less than the reported value and 10 percent have concentrations higher than the reported value. Lead and copper monitoring was conducted most recently in summer 2008 and were both at or below the action levels. The next round of testing with be in August 2011. Compliance is determined on a regional basis.

Lead and Copper Monitoring Results (Tolt WSA)

Parameter and Units	MCLG	Action Level+	2008 Results*	Homes Exceeding Action Level	Source
Lead, ppb	0	15	12	4 of 51	Corrosion of household plumbing systems
Copper, ppm	1.3	1.3	0.20	0 of 51	

* 90th Percentile: i.e. 90 percent of the samples were less than the values shown.

\+ The concentration of a contaminant which, if exceeded, triggers treatment or other requirements which a water system must follow.

Infants and young children are typically more vulnerable to lead in drinking water than the general population. It is possible that lead levels at your home may be higher than at other homes in the community as a result of materials used in your home's plumbing. If you are concerned about elevated lead levels in your home's water, you may wish to have your water tested. You can also flush your tap for 30 seconds to 2 minutes before using tap water. Additional information is available from the Safe Drinking Water Hotline 800.426.4791 or at www.epa.gov/safewater/lead.

SPU monitors several parameters in the interest of our customers. The table on the right lists the water quality information most recently requested.

Note: abbreviation definitions available on page 4.

Additional Water Quality Sampling

PARAMETER & UNITS	CEDAR SUPPLY	TOLT SUPPLY
Alkalinity, Total (as $CaCO_3$) mg/L	20 2	19.2
Calcium, (as $CaCO_3$) mg/L	23.0	25.9
Hardness, (as $CaCO_3$) mg/L	26.9	27.4
Hardn ss, (a CaCO) grai s/gal	1.55	1.58
Iron, ppb	66	41
Manganese, ppb	3 4	0.7
pH, range (January-June 2009, 10-90th percentile)	7.73-8.58	8.26-8.48
Potassium, mg/L	0.26	0.14
Sodium, mg/L	1.90	1.32
Sulfate mg/L	1.4	1.9
Temperature, annual range, C°	4.6-23	3.3-22

Water Conservation Information

Can you be more efficient?

An average single-family household in Seattle uses 4,040 gallons a month in the winter and 5,759 gallons a month in the summer. Is your water use above average? Or do you want to increase your water use efficiency? Here are some easy ways to save water. You can find even more ways to conserve at www.savingwater.org, including rebates on water-saving appliances and fixtures.

- Wait to wash cloths until you have a full load.
- Switch to an efficient showerhead and take a shorter shower.
- Match the right plant to the right place in your garden. Subscribe to the Savvy Gardener Electronic Newsletter: http://www.savingwater.org/outside_savvygardener.htm.
- Adjust your lawn and/or gardening watering schedule for optimum efficiency (see how at www.iwms.org).
- Don't' run the water while brushing your teeth.
- Find and repair any water leaks: http://www.savingwater.org/inside.htm#leaks.
- Look for the WaterSense label on new appliances: http://www.epa.gov/watersense/products/index.html.

Top three things you can do to Conserve Water

Indoors

Replace old Toilets

- Replacing an old toilet with a new WaterSense model saves an average household almost 30 gallons per day - and up to $260 a year.

Upgrade Washers

- Upgrading an old clothes washer to a new WashWise qualified machine saves an average household* 27 gallons per day. WashWise certified machines also save energy and use less detergent.

Find and Fix Leaks

- Fixing leaks saves an average of 10 gallons per day per household. Check your toilet for leaks yearly. Visit savingwater.org to find out how.

In Your Yard

Right Plant, Right Place

- Match plants to the conditions in your yard - if you have wet, shady areas, choose plants that thrive there, and the same with dry, sunny areas. If plants are well-suited to their place in your yard, you won't need to water so much.**

Cultivate your Soil

- Healthy soil holds water and gives plants the nutrients they need to stay beautiful. Add compost and mulch to your beds to slow the weeds and hold water near plant roots, where needed.**

Reduce Water Waste

- When you water, make sure the water gets to the roots, where plants need it. Drip irrigation systems avoid shooting water up into the air, where much of it evaporates.**

* *Based on a four-person household*

** *Water savings vary depending on the size and design of your landscape.*

What You Do to Conserve Helps Salmon Too

Healthy rivers with ample clean water are essential for healthy salmon populations. Everything you do to use water wisely – washing full loads, turning off the faucet, taking shorter showers, choosing plants that are right for the site, watering the lawn no more than it needs – helps keep water in our rivers and streams. Conserving is especially important in the summer and early fall, when river flows are lowest. Thank you for all you're doing to conserve water! Many of these practices save energy and protect the water quality of Puget Sound as well.

Thank you for all you're doing to conserve water. It makes a difference!

Tap vs. bottled

Thanks in part to aggressive marketing, the bottled water industry has successfully convinced us all that water purchased in bottles is a healthier alternative to tap water. However, according to a four-year study conducted by the Natural Resources Defense Council, bottled water is not necessarily cleaner or safer than most tap water.

The FDA is responsible for regulating bottled water, but these rules allow for less rigorous testing and purity standards than those required by the EPA for community tap water. For instance, the high mineral content of some bottled waters make them unsuitable for babies and young children. Furthermore, the FDA completely exempts bottled water that is packaged and sold within the same state, which accounts for about 70% of all bottled water sold in the United States.

People spend 10,000 times more money per gallon for bottled water than they typically do for tap water. If you get your recommended eight glasses a day from bottled water, you could spend up to $1,400 annually. The same amount of tap water would cost about 49 cents. Even if you installed a filter device on your tap, your annual expenditure would be far less than what you'd pay for bottled water.

For a detailed discussion on the NRDC study results, check out their website at www.nrdc.org/water/drinking/bw/exesum.asp.

Watershed Protection

Watershed protection is the first line of defense in protecting the naturally pristine water of the Tolt River. The watershed is patrolled on a regular basis. Access is restricted to sensitive areas of the watershed, and human activities are managed to minimize potential impacts on water quality. SPU also works with other jurisdictions and agencies to establish and maintain land-use policies that minimize the potential water quality impacts from human activities in the watershed.

Cross Connection Alert for Annual Backflow assembly Testing

A connection between your drinking water pipes and a source of contamination is called a cross connection. Examples include irrigation systems; dialysis machines; nearly every hose-end applicator used for fertilizers, pesticides and herbicides; photo developing equipment; and industrial waste uses.

Cross connections are extremely dangerous because they provide opportunities for contaminating fluids to be pulled back into the water system. To help minimize the dangers, please use the following tips:

- Avoid using hose-end spray applicators for landscaping chemicals.
- Install a backflow assembly if there is an existing or potential cross-connection.
- Have the backflow assembly tested by a state-certified backflow tester after installation and send a copy to the City of Duvall Public Works Dept., PO Box 1300, Duvall, WA 98019.
- Every year, all Duvall water utility customers who have backflow assemblies must have them tested and send a copy of certification to the Public Works Dept.

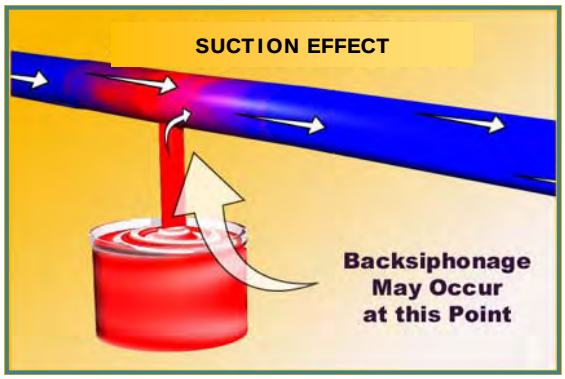

For more information, review the Cross-Connection Control Manual from the U.S. EPA's website at www.epa.gov/safewater/crossconnection.html. You can also call the Safe Drinking Water Hotline at 1.800.426.4791.

Looking Into The Future

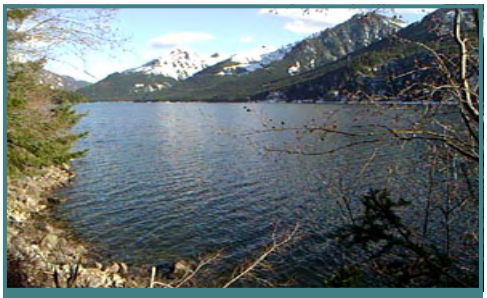

Tolt Reservoir photo courtesy of Seattle Public Utilities:
At 1765 feet above sea level, the Tolt Reservoir is the primary water storage area in the Tolt River Watershed

Thank you for helping us continue providing your family with clean, quality water this year. This has been a community effort. In order to maintain a safe and dependable water supply we sometimes need to make improvements that will benefit all of our customers. Last year's improvements included installing system wide pressure relief stations, reconstructing mainlines and providing improved flow and water quality in the system. The City has completed installing and is using the Radio-Read meter reading system. Thank you for your understanding and support. Due to recent events throughout the nation, we have heightened the security of our water supply network and tried to limit the access to the system for your protection.

We at the City of Duvall work around the clock to provide top quality water to every tap. We ask that all our customers help us protect our water supply, which is the heart of our community, our way of life, and our children's future.

For more information on this report, or any questions relating to your drinking water, please call the Public Works Department at 425.788.3434. For Billing or Consumption Records / questions contact the Utility Billing Clerk at 425.788.1185.

City of Duvall
Small Town. Real Life.
Public Works Dept.
14525 Main Street NE
PO Box 1300
Duvall, WA 98019

APPENDIX N

Water Ordinances

CITY OF DUVALL
COUNCIL MEETING
November 22, 2011
7:00 P.M. - Duvall Fire Station

Council Workshop – 5:00 PM: **Joint City Council/Planning Commission Workshop – Duvall Urban Village Developer Agreement**

The City Council Meeting was called to order by Mayor Will Ibershof 7:08 P.M.

Council Present: Gérard Cattin, Elizabeth Walker, Dianne Brudnicki, Gary Gill, Amy Ockerlander, Jeff Wolf

Staff Present: Steve Leniszewski, Jill Long, Lara Thomas, Attorney Ann Marie Soto, Jodi Lee Wycoff, Boyd Benson

I. Additions or Corrections to the Agenda:

Under Consent Agenda add: Payroll Checks #14026-14031, in the amount of $157,631.05; Claims Checks #14032-14062, in the amount of $90,522.44; Under Mayor remove: items a. and b., they were given during workshop; and add: items c. Staff Update, Public Works; and d. Staff Update, Finance Department; Under Council add: Councilmember Ockerlander.

II. Adoption of Council Agenda:

It was moved and seconded (Cattin-Brudnicki) to adopt the 11/22/11 Council Agenda. The motion carried. (6 ayes).

III. Comments from the Audience:

Ray Burhen, Duvall resident, spoke about the development agreement that was discussed during workshop. One of the main issues is the amount of commercial to go in with the rest of the development. Ray said that Economic Development has been a discussion in Duvall for many years. Duvall is rather restrictive about what types of businesses are allowed. We may have to look at changing the zoning to allow other types of businesses in. Ray said that it is a difficult decision and a tough balance. On one side, you want to keep the small town charm and have retail store fronts that keep with Duvall's character. On the other side, you need bigger businesses to come in to generate the bigger sales tax revenue. Council may have to decide which way they want to see Duvall go because if you go with bigger commercial, it will change Duvall's character and feel, but if they don't want to go that way, they will have to continue to work with smaller budgets.

IV. Approval of Consent Agenda:

It was moved and seconded (Walker-Ockerlander) to approve the consent agenda which includes Payroll Checks #14026-14031, in the amount of $157,631.05; Claims Checks #14032-14062, in the amount of $90,522.44; and Approving the Council Meeting Minutes of 11/10/11. The motion carried. (6 ayes).

V. Presentation: Community Event Grant Report

Kass Holdeman, Duvall Cultural Commission Liaison, handed out and reviewed a report on the 2011 Community Event Grants. She reviewed who was awarded grant funds, the events they sponsored, what they spent the grant funds on, and how much they requested. She said some entities have not requested reimbursement yet and some may not request reimbursement because they were either awarded the funds too late to use them or they did not end up needing the funds. Some of the events she reviewed were Duvall Days, Trick or Treat Event, Valley Art Show, and Sandblast. Councilmember Cattin asked if any of the entities had any feedback about the process for next year. Kass said the only group she heard from was Duvall Days. They asked if the City could pay city related expenses directly to reduce the amount of paperwork each has to do. She said she would talk to the Finance department to see if there were any options. Kass also said that she has the forms ready for next year. She plans to do two workshops in January for potential applicants. She would also like to have one review meeting where a representative from each entity is required to attend in case there are any questions about their event.

Presentation: Economic Development Report

Kass Holdeman, Duvall Cultural Commission Liaison, handed out and reviewed an Economic Development Report. The report reviewed Duvall's business climate which shows that retail sales per capita are low and the number of businesses are also low. The report also discussed "What is Duvall's Direction?" This touched on how businesses find a location and what Duvall can do to be attractive to potential businesses. The report also talked about the Chamber of Commerce and what the city's relationship with them should look like. Lastly, the report had a 2010 spreadsheet comparing Duvall to other cities in Washington of various sizes. It compared statistics like population, housing units, median household income, number of businesses, and land area. Kass then handed out a draft of a document currently called "City of Duvall Guide to Business" (the title will likely change). This document is intended to be distributed to potential businesses and commercial real estate brokers. It has information about Duvall, the Riverview School District, our community and neighborhoods, the Snoqualmie Valley, and some basic statistics about Duvall and its citizens. It also has a quick guide on what businesses need to do to open in Duvall. Kass said that she is working on finalizing the document and hopes to have a final draft to show Council by the end of the year.

VI. Scheduled Items:

1. Mayor:

(Mayor Ibershof spoke on items a. and b. during workshop. The reports are paraphrased below for public interest.)

a. Discussion of a letter to the Governor on proposed reductions of State Shared Revenue to cities: Mayor Ibershof handed out a copy of the letter he drafted to send to Governor Gregoire regarding the potential loss of revenue from liquor sales tax. He asked Council to review the letter and get edits to the Clerk's office soon. Councilmember Ockerlander offered to take the lead on edits.

b. Presentation on the 2011 National League of Cities Conference: Mayor Ibershof showed a brief PowerPoint presentation about his time at the conference. He said there were four main topics discussed: Economic Development, Green Cities, Infrastructure, and Your Cities Families (health and wellness). Mayor Ibershof focused most of his time on the first three

topics and networked with the different elected officials and administrators that attended. One discussion he found interesting was on branding your city – what do you want your city to be known for. Mayor Ibershof said he also found discussions on using resources your city already has; using the internet to create interactive ways to reach your citizens; and various sustainability projects interesting. Mayor Ibershof said based on attending this conference, he has three goals for 2012 that he would like to work on: 1. Economic Development – focus on improving our TV station and website. 2. Sustainable Projects – continue partnerships with local organizations such as Scouts, Little League, and soccer groups. 3. Infrastructure – evaluate what we have, determine what we need, and look at funding options for those needs.

c. Staff Update – Public Works Department: Steve Leniszewski, Public Works Director, reported that we just got word that we were awarded a TIB grant for the overlay on Big Rock Road between old Big Rock Road and NE 275th Street.

d. Staff Update – Finance Department: Jill Long, Finance Director said that one of the main projects Finance has been working on this year is to clear up our outstanding accounts receivable. There are five outstanding accounts from 2009 that they are looking to write off that have to be approved by Council. She wanted to assure Council that the Finance Department has worked diligently to collect the funds and explained that these five are either covered by bankruptcy or some other court case. She will bring these to Council at the next meeting.

2. Committee Reports:

a. Land Use Committee: Councilmember Cattin said they reviewed the Duvall Urban Village development agreement that was discussed during the workshop.

b. Public Works Committee: Councilmember Ockerlander had no report.

c. Public Safety Committee: Councilmember Ockerlander reported that the Committee did not meet but she hopes to have a meeting next month. She did remind everyone that with the current weather, be prepared for flooding.

d. Finance & Administration Committee: Councilmember Brudnicki said that the Committee met and discussed the potential revenue losses from Initiative 1183 passing. Duvall's losses could be upwards of $75,000. They discussed writing the letter which the Mayor shared earlier regarding State shared revenue. The committee also discussed the Carnation Police contract and what the options are after the contract expires in 2013. She said that after a lot of hard work by staff and the Finance Committee, the 2012 budget is ready for approval. She is happy to report that they were able to come up with a balanced budget without raising taxes or using the contingency fund while keeping the current level of service. She also said that this past year a citizen raised concerns about staff overtime, specifically in our Police Department. The Chief worked hard to come up with a solution to the issue without compromising the level of service. Lastly, Councilmember Brudnicki said the Finance Committee recommends that Council pass the 2012 Budget tonight.

e. Economic Development Committee: Councilmember Walker said the Committee has not had a meeting recently but she did want to thank Kass Holdeman for her presentation earlier. She also said they are looking forwarding to working with the Chamber of Commerce. Councilmember Walker did mention that SVGA (Snoqualmie Valley Government Association)

and King County Agriculture Commission are co-sponsoring a round table meeting with local farms. The meeting is on December 7th from 6:00pm to 9:00pm at Issaquah City Hall. She encouraged everyone to attend.

3. Council

Councilmember Ockerlander reported that the AWC (Association of Washington Cities) Legislative Committee met recently. Their main topic was the updated State Budget. They discussed at length the potential loss of revenue from liquor sales tax. She read a document from AWC that lists out some considerations that cities are asking the State to keep in mind when looking at budget cuts. She said she will get a copy to each Councilmember to review. Councilmember Ockerlander also said that Governor Gregoire is talking to the local tribes about their contracts and looking at options to possibly share revenues. Governor Gregoire is also talking to Senator Murray about streamlining state sales tax and the Governor is proposing a statewide sales tax increase which would fund social services. Another budget item that may affect Duvall is in criminal justice. Whenever we have a new recruit going to training, it is normally paid for by the state. Under the proposal, the city would be responsible for half the cost which would be about $6,000 per recruit. Also in criminal justice, they are looking at a reduction in offender supervision and releasing an estimated 370 low-risk offenders every day. Councilmember Ockerlander also said they discussed the revenue sharing side of the budget issue, specifically the liquor profit sharing. She said that AWC will send out a whole analysis of the budget. Suburban Cities Association said their staff will analyze the impact of the budget proposals on King County cities specifically. Lastly, Councilmember Ockerlander said that the Eastside Transportation Partnership met and discussed King County Metro's priorities.

VII. Public Hearing: Final Public Hearing on the City of Duvall 2012 Budget

8:19 PM: The Public Hearing was opened.

Jill Long, Finance Director, said that the Preliminary Budget was presented and filed per State code. It is a base budget and the only change on the Final Budget is that they did not need to use the contingency fund. She explained that this Hearing is to satisfy State law.

There were no public comments.

8:21 PM: The Public Hearing was closed.

Public Hearing: Water Comprehensive Plan Update

8:21 PM: The Public Hearing was opened.

Boyd Benson, City Engineer, said that the Plan has been technically reviewed and asked for Council to approve it.

There were no public comments.

8:23 PM: The Public Hearing was closed.

VIII. New Business:

1. (AB11-77) Confirmation of appointment of Scott Thomas to the Duvall Planning Commission, position #2, a term ending 12/31/13. *It was moved and seconded (Cattin-Walker) to c*

8) Adopt Ordinance #1122 fixing the amount of the Annual Ad Valorem Property Tax Levy for the Fiscal Year 2012. *It was moved and seconded (Cattin-Wolf) to Adopt Ordinance #1122 fixing the amount of the Annual Ad Valorem Property Tax Levy for the Fiscal Year 2012. The motion carried (6 ayes).*

3. (AB11-79) Ordinance #1123 Amending Ordinance #1114, the Amended Budget for Fiscal Year 2011, for the purposes of accounting for additional revenues and expenditures. *It was moved and seconded (Walker-Wolf) to adopt Ordinance #1123 Amending Ordinance #1114, the Amended Budget for Fiscal Year 2011, for the purposes of accounting for additional revenues and expenditures. The motion carried (6 ayes).*

4. (AB11-80) Ordinance #1124 adopting the City of Duvall Budget for the Fiscal Year 2012. *It was moved and seconded (Wolf-Brudnicki) to adopt Ordinance #1124 adopting the City of Duvall Budget for the Fiscal Year 2012. The motion carried. (6 ayes).*

5. (AB11-81) Ordinance #1125 amending the Duvall Municipal Code Section 9.02.090 adopting the 2011 Comprehensive Water System Plan for the City of Duvall; and authorizing adoption of the associated General Facilities Charge by Resolution. *It was moved and seconded (Walker-Ockerlander) to adopt Ordinance #1125 amending the Duvall Municipal Code Section 9.02.090 adopting the 2011 Comprehensive Water System Plan for the City of Duvall; and authorizing adoption of the associated General Facilities Charge by Resolution. The motion carried. (6 ayes).*

6. (AB11-82) Resolution #11-13 setting the City of Duvall Water General Facilities Charge. *It was moved and seconded (Wolf-Ockerlander) to adopt Resolution #11-13 setting the City of Duvall Water General Facilities Charge. The motion carried. (6 ayes).*

IX. Executive Session: *None*

X. Adjournment:

It was moved and seconded (Cattin-Walker) to adjourn the meeting.
The meeting adjourned at 8:39 p.m.

Signed_____
Mayor Will Ibershof

Attest_____
Jodi Lee Wycoff, Deputy City Clerk

CITY OF DUVALL
WASHINGTON

ORDINANCE NO. 1125

AN ORDINANCE OF THE CITY OF DUVALL, WASHINGTON, AMENDING THE DUVALL MUNICIPAL CODE SECTION 9.02.090 ADOPTING THE 2011 COMPREHENSIVE WATER SYSTEM PLAN FOR THE CITY OF DUVALL; AND AUTHORIZING ADOPTION OF THE ASSOCIATED GENERAL FACILITIES CHARGE BY RESOLUTION.

WHEREAS, the City of Duvall, in 2010, retained consulting engineers to prepare an update to the Comprehensive Water System Plan; and

WHEREAS, the City of Duvall has thoroughly evaluated the water, system growth, water usage, water supply, and other aspects of the Comprehensive Water System Plan; and

WHEREAS, the City Council conducted a public hearing on November 22, 2011 on adoption of the Comprehensive Water System Plan ;

NOW, THEREFORE, THE CITY COUNCIL OF THE CITY OF DUVALL, WASHINGTON, DO ORDAIN AS FOLLOWS:

Section 1. 9.02.090 Adoption of the Plan Section 9.02.090 of the Duvall Municipal Code is hereby amended to read as follows:

The city of Duvall adopts by reference the Comprehensive Water System Plan prepared by Murray Smith & Associates, Inc., dated October 2011 and on file with the city clerk.

Section 2. Associated General Facilities Charge. The City imposes a general facilities charge (GFC) on all new connections to the water system. The water general facilities charge (GFC) shall be set from time to time by Resolution.

Section 3. Severability. Should any section, paragraph, sentence, clause or phrase of this Resolution, or its application to any person or circumstance, be declared unconstitutional or otherwise invalid for any reason, or should any portion of this Resolution be pre-empted by state or federal law or regulation, such decision or pre-emption shall not affect the validity of the remaining portions of this Resolution or its application to other persons or circumstances.

Section 4. Effective Date. This Ordinance shall be published in the official newspaper of the City, and shall take effect and be in full force five (5) days after the date of publication.

ADOPTED BY THE CITY COUNCIL AT A REGULAR MEETING THEREOF ON THE 22nd DAY OF NOVEMBER, 2011.

CITY OF DUVALL

Mayor Will Ibershof

Approved as to form:

Bruce Disend, City Attorney

ATTEST/AUTHENTICATED:

Jodee Schwinn, City Clerk

Passed by the City Council: 11/22/11
Ordinance #1125
Published on: 11/28/11

CITY OF DUVALL
WASHINGTON

RESOLUTION NO. 11-13

A RESOLUTION OF THE CITY COUNCIL OF THE CITY OF DUVALL, WASHINGTON, SETTING THE WATER GENERAL FACILITIES CHARGE.

WHEREAS, the City of Duvall 2011 Comprehensive Water System Plan adopted by the City Council of the City of Duvall on November 22, 2011 included a financial evaluation of the water utility, and;

WHEREAS, the financial evaluation the City of Duvall charges a Capital Improvement Charge, also known as a General Facilities Charge; and

WHEREAS, the financial evaluation included updated General Facilities Charges calculations, and;

WHEREAS, the Duvall Municipal Code has been amended to authorize implementation of the General Facilities Charge by Resolution;

NOW, THEREFORE, THE CITY COUNCIL OF THE CITY OF DUVALL, WASHINGTON, DO RESOLVE AS FOLLOWS:

Section 1. The General Facilities Charge shall be as summarized in the table below

Meter Size	Calculated GFC
5/8-inch	$ 6,656
3/4-inch	9,983
1-inch	16,639
1 1/2-inch	33,279
2-inch	53,246
3-inch	106,493

Section 2. The General Facilities Charge shall be effective January 1, 2012.

Section 3. Annual Adjustment. The Annual Adjustment of the General Facilities Charge shall be adjusted each January by the annual average (Jan-Dec) percent change of the preceding two years of Engineering News-Record Construction Cost Index as adopted by City of Duvall Resolution #11-02.

Section 4. Severability. Should any section, paragraph, sentence, clause or phrase of this Resolution, or its application to any person or circumstance, be declared unconstitutional or otherwise invalid for any reason, or should any portion of this Resolution be pre-empted by state

or federal law or regulation, such decision or pre-emption shall not affect the validity of the remaining portions of this Resolution or its application to other persons or circumstances.

PASSED BY THE CITY COUNCIL AT A REGULAR MEETING THEREOF ON THE 22nd DAY OF NOVEMBER, 2011.

CITY OF DUVALL

Mayor Will Ibershof

Approved as to form:

Bruce L. Disend, City Attorney

ATTEST/AUTHENTICATED:

Jodee Schwinn, City Clerk

Resolution No. 11-13
Passed on: November 22, 2011

APPENDIX O

Agency Review Comments

RECEIVED

FEB 13 2012

CITY OF DUVALL

STATE OF WASHINGTON
DEPARTMENT OF HEALTH
NORTHWEST DRINKING WATER REGIONAL OPERATIONS
20435 72nd Avenue South, Suite 200, Kent, Washington 98032-2358

February 8, 2012

STEVE LENISZEWSKI DIRECTOR OF PUBLIC WORKS
DUVALL CITY OF
PO BOX 1300
DUVALL WA 98019

RE: Duvall, City of, ID# 20750
King County
Water System Plan – 2011
Submittal # 11-1201

Dear Mr. Leniszewski:

Thank you for submitting the draft Water System Plan (WSP) for the City of Duvall (the City), received in this office on December 2, 2011. We offer the following comments. The comments must be adequately addressed prior to approval.

System Description

1. What is the status of the telemetry and supervisory control system improvement project? How have operations been affected with the reported damages?

Basic Planning Data and Water Demand Forecasting

2. In Table 4-6, the trend is generally shown to decrease but a large increase in DSL is shown between 2008 and 2009. Does the City have an explanation for this increase? The system DSL shown in Table 4-7 differs from what was submitted in the Water Use Efficiency Annual Performance Report in 2009. Please clarify.

3. In Table 4-9, please describe the basis for selection of the PDD/ADD and PHD/PDD ratios in the text.

Water Source and Quality

4. Text in Chapter 6 (and elsewhere in the WSP) indicates the City would like to use the Taylor's Landing Well for potable water use in the future. A quick review of our records indicates this source has not been approved by the Department for use. The City will be required to submit source approval documentation to the Department and receive approval for this source before it can be used. The City may wish to pursue source approval now and use the source in the case of an emergency. Please contact us to discuss source approval requirements.

5. Currently the City takes five routine coliform samples every month from two monitoring locations. The City is comprised of five zones. We recommend including additional coliform monitoring locations within your system to provide better geographic coverage of your water system.

Standard Construction Specs – Construction Completion Reports

6. It is unclear whether the City intends to request the submittal exception under WAC 246-290-125. If you wish to request this submittal exception for water distribution main extensions, please provide water system standard specifications (including procedures for appropriate pressure testing and disinfection) and a standard trench section for applicable pipe materials.

Operation & Maintenance

7. In the last WSP, the City had plans to complete several of the required elements of a cross connection control program as defined in WAC 246 290 490. Please describe in the text how each of the required elements has been met. If not yet complete, please include an estimate of when each element will be completed.

8. In the reliability and emergency operations section, please describe the areas of the system that can be powered by automatic or manual generators in the event of a power outage.

Water System Analysis

9. In Table 8-2, the available source capacity shown includes the capacity of both the Tolt 1 and Tolt 2 Supply Stations. In the contract, the Tolt 2 Supply Station is shown as a 'backup'. Please clarify if the City is allowed to draw the full capacity from both supply stations concurrently under the current contract provisions. If not, please change Table 8-2 to reflect this information. Also, when will the expansion project for the Tolt 2 Supply Station be completed? Who would fund and construct this project?

10. In Table 8-3, please describe in the text (or footnote to table) how the demands were developed for the 615 Zone Peak Hour Demand and the Transfer to the 555 Zone.

11. In Tables 8-4 and 8-5, please provide the calculation used to determine how each of the storage components was determined. Provide this information in the text or as a footnote in the table.

12. For the hydraulic analyses, please provide the following information in the chapter text or appendices:
    - Provide a table (or text) presenting the data collected for model calibration (i.e., hydrant testing results as compared to the model results).
    - Describe how the SPU inlets were modeled in the text including pressure and flow assumptions.
    - Provide modeling results for existing and future system scenarios for peak hour demand and fire flow analysis. The results can be presented in a figure or in tables.

Water System Improvements

13. Please provide Construction Completion Reports for the distribution main projects list on Table 9-2.

14. Please describe the reason for implementing CIP project PRV1. Why is the 485 pressure zone being eliminated?

Other Documentation

15. The water system must meet the consumer input process outlined in WAC 246-290-100(8). Please include documentation of a consumer meeting discussing the WSP, prior to DOH approval of the WSP.
16. Prior to DOH approval, the City's governing body must approve and adopt the WSP. This is a new requirement resulting from the Municipal Water Legislation.
17. Please provide an Adoption Ordinance for your WSP from King County, if the City provides water service in unincorporated King County.
18. Please provide a signed SEPA Threshold determination with the final WSP.
19. Please provide copies of any comments made by adjacent purveyors or other interested parties, along with the City's response to those comments.

We hope that you have found these comments to be clear, constructive and helpful in the development of your final draft WSP. We ask that you submit the revised WSP on or before **May 10, 2012**. In order to expedite the review of your revised submittal, please include a cover letter summarizing how each of the above comments was addressed in the revised WSP and where each response is located (i.e., page numbers, Appendices, etc.)

Regulations establishing a schedule for fees for review of planning, engineering and construction documents have been adopted (WAC 246-290-990). Please note that we have included an invoice in the amount of $3,705 for the review of the Water System Plan. This fee covers our cost for review of the initial submittal, plus the review of one revised document. Please remit your complete payment in the form of a check or money order within thirty days of the date of this letter to: **DOH, Revenue Section, and P.O. Box 1099, Olympia, WA 98507-1099.**

Thank you again for submitting your draft Water System Plan for our review. If you have any comments or questions concerning our review, please contact one of us at the phone numbers provided below.

Sincerely,

Richard Rodriguez
Regional Planner
Office of Drinking Water - NWRO
(253) 395-6771

Paige S. Igoe, PE
Regional Engineer
Office of Drinking Water – NWRO
(253) 395-6764

cc: Steve Hirschey, King Co. UTRC
Thomas Lindberg, P.E., Murray, Smith & Associates, Inc.

City of Duvall
Small Town. Real Life.

May 31, 2012

Mr. Richard Rodriguez, Regional Planner
State of Washington Dept. of Health
Northwest Drinking Water Operations
20435 - 72nd Ave S, Suite 200, K17-12
Kent, WA 98032-2358

Re: City of Duvall Comprehensive Water System Plan
DOH Review Comments (Submittal #11-1201) and WSP Inserts

Dear Mr. Rodriguez:

The City of Duvall received the Comprehensive Water System Plan comments prepared by the Department of Health on February 8, 2012. We have prepared responses to address each of your comments. Please see the City's response following each comment below:

System Description

1. What is the status of the telemetry and supervisory control system improvement project? How have operations been affected with the reported damages?

The control systems of all facilities are currently working and functioning as designed. The communication portion of the City's telemetry system is not functioning as desired, but is currently undergoing troubleshooting and repair. The City recently signed an interlocal agreement with the City of Marysville to receive services from their telemetry control specialist. The City plans to employ the telemetry person 2 days a month to resolve the issues with our system.

The damage to the City's telemetry system has not had any significant impact on the water systems operations.

Basic Planning Data and Water Demand Forecasting

2. In Table 4-6, the trend is generally shown to decrease but a large increase in DSL is shown between 2008 and 2009. Does the City have an explanation for this increase? The system DSL shown in Table 4-7 differs from what was submitted in the Water Use Efficiency Annual Performance Report in 2009. Please clarify.

The City has spent a significant amount of time looking into this and feels that the increase in 2009 is due to a combination of the difference in reporting periods between the supply data and consumption data, and past issues with the telemetry system. Efforts are being made to improve upon both of these.

Table 4-7 reflects more detailed analysis and greater efforts than the WUE annual report to better align the purchased supply and metered consumption reporting periods in 2009. We believe we have presented the most accurate information available to us in this water system plan.

3. In Table 4-9, please describe the basis for selection of the PDD/ADD and PHD/PDD ratios in the text.

Due to the previously discussed issues with the telemetry system in item 1 above, there was insufficient telemetry data available to calculate the peaking ratios. The ratios used reflect a conservative approach using typical values representing other water system in the Puget Sound area based on the experience of our consultant from preparing several water system plans.

Water Source and Quality

4. Text in Chapter 6 (and elsewhere in the WSP) indicates the City would like to use the Taylor's Landing Well for potable water use in the future. A quick review of our records indicates this source has not been approved by the Department for use. The City will be required to submit source approval documentation to the Department and receive approval for this source before it can be used. The City may wish to pursue source approval now and use the source in the case of an emergency. Please contact us to discuss source approval requirements.

The City will notify the Department prior to requesting source approval necessary to utilize the Taylor's landing well for potable use. At this time the City does not anticipate this happening in the near future.

5. Currently the City takes *five* routine coliform samples every month from two monitoring locations. The City is comprised of five zones. We recommend including additional coliform monitoring locations within your system to provide better geographic coverage of your water system.

SPU performs the City's regular coliform monitoring. The City plans to add one more coliform sample stand in 2012 bringing the total to three coliform stands within three of our five pressure zones. The smallest pressure zone in the system (485 Zone) is planned to be merged with the existing 555 Zone in 2012 (CIP Project #PRV1) which will bring our testing to three sample stands within four pressure zones.

Standard Construction Specs — Construction Completion Reports

6. It is unclear whether the City intends to request the submittal exception under WAC 246-290-125. If you wish to request this submittal exception for water distribution main extensions, please provide water system standard specifications (including procedures for appropriate pressure testing and disinfection) and a standard trench section for applicable pipe materials.

The City wishes to request a submittal exception for water distribution main projects. The City's standard specifications for water distribution main projects are attached.

Operation & Maintenance

7. In the last WSP, the City had plans to complete several of the required elements of a cross connection control program as defined in WAC 246 290 490. Please describe in the text how each of the required elements has been met. If not yet complete, please include an estimate of when each element will be completed.

Our updated program is detailed in the attached Cross Connection Control Plan, which will be included in Appendix I of the WSP. This appendix was inadvertently not included in the City's original submittal to DOH, but is attached.

8. In the reliability and emergency operations section, please describe the areas of the system that can be powered by automatic or manual generators in the event of a power outage.

The 615 Zone Booster Pump Station is the only facility with a need for backup power. As mentioned on page 2-7, the 615 Zone Booster Pump Station is equipped with a standby backup generator with an automatic transfer switch that would ensure reliable operation of the pump station during a power outage.

Water System Analysis

9. In Table 8-2, the available source capacity shown includes the capacity of both the Tolt I and Tolt 2 Supply Stations. In the contract, the Tolt 2 Supply Station is shown as a 'backup'. Please clarify if the City is allowed to draw the full capacity from both supply stations concurrently under the current contract provisions. If not, please change Table 8-2 to reflect this information. Also, when will the expansion project for the Tolt 2 Supply Station be completed? Who would fund and construct this project?

The existing supply contract provisions do not limit the amount of water that the City can draw from each supply station. The maximum amount that the City can draw from each supply station, shown as "Available Source Capacity" in Table 8-2, is based on the actual physical capacity of the system as limited by the size of installed piping and appurtenances. The flow rate specified in Exhibit II of the contract is SPU's estimate of Duvall's future demands in the year 2030 and relates to the minimum hydraulic gradient that SPU will provide at the connection to SPU's Tolt Pipeline.

The Tolt 2 Supply Station improvements are planned to be implemented in phases with the first phase of improvements planned before 2016 and the remaining improvements planned between 2023 and 2030. The City anticipates that it will fund the improvements.

10. In Table 8-3, please describe in the text (or footnote to table) how the demands were developed for the 615 Zone Peak Hour Demand and the Transfer to the 555 Zone.

The information contained in Table 8-3 is described in the "Analysis Criteria" section that precedes Table 8-3. The 615 Zone peak hour demand shown in the table was calculated from the average day demand value reported in Table 4-4 and the peaking factors in Table 4-9. The 555 Zone transfer amount represents the peak day demand of the 485 and 555 Zones, since both are supplied from the 615 Zone. The peak day demand of the 485 and 555 Zones was also calculated from the average day demand values reported in Table 4-4 and the peaking factors in Table 4-9.

11. In Tables 8-4 and 8-5, please provide the calculation used to determine how each of the storage components was determined. Provide this information in the text or as a footnote in the table.

The information contained in Tables 8-4 and 8-5 and the corresponding calculation methods used are described in the "Analysis Criteria" section that precedes Table 8-4. Operational storage volume shown is from the sum of 80,000 gallons in the 0.5 MG reservoir based on an operating range of 9.5 feet and 760,000 gallons in the 2.2 MG reservoir based on an operating range of 6.8 feet. Equalizing storage volumes shown are calculated as 11.3% of the peak day demand. Standby storage volumes shown are the product of the average day demand and 1440, representing average day demand over a 24-hour period. Fire flow storage volume shown is the product of the maximum fire flow requirement of 3,500 gpm and its 3-hour duration.

12. For the hydraulic analyses, please provide the following information in the chapter text or appendices:

- Provide a table (or text) presenting the data collected for model calibration (i.e., hydrant testing results as compared to the model results).

  Attached to this letter is a table presenting the model calibration data.

- Describe how the SPU inlets were modeled in the text including pressure and flow assumptions.

  The SPU inlets were modeled at the two supply station sites to simulate the Tolt Pipeline operating at minimum contract head levels, which are 645 feet for Tolt 1 Supply Station and 640 feet for Tolt 2 Supply Station. The supply stations were modeled to simulate the current operation of the stations, which are equipped with control valves and configured to provide supply into the system based on the following pressure settings:

  Tolt 1 Supply Station:
  4-inch control valve set at 70 psi, 8-inch control valve set at 65 psi.

  Tolt 2 Supply Station:
  4-inch control valve set at 67 psi, 10-inch control valve set at 62 psi.

- Provide modeling results for existing and future system scenarios for peak hour demand and fire flow analysis. The results can be presented in a figure or in tables.

  Attached to this letter are tables presenting the modeling results.

Water System Improvements

13. Please provide Construction Completion Reports for the distribution main projects list on **Table 9-2.**

The City has completed and attached the CCR along with a memo dated May 22, 2012.

14. Please describe the reason for implementing CIP project PRV1. Why is the 485 pressure zone being eliminated?

The 485 Zone is a closed zone with dead-end mains in cul-de-sacs and little water circulation because it has small demands and is isolated by two PRV stations. The PRV1 project will eliminate all but one dead-end, improve water circulation, and reduce maintenance and operating costs from elimination of the two PRV stations. All homes within the existing 485 Zone include individual service PRV's to limit pressures and can be adequately served by the 555 Zone.

Other Documentation

15. The water system must meet the consumer input process outlined in WAC 246-290-100(8). Please include documentation of a consumer meeting discussing the WSP, prior to DOH approval of the WSP.

The City notified customers of the opportunity to comment on the draft water system plan in the November 2011 newsletter that is sent to all customers. The meeting was coincident with the public hearing on November 22nd, 2011. Copies of the meeting minutes are enclosed.

16. Prior to DOH approval, the City's governing body must approve and adopt the WSP. This is a new requirement resulting from the Municipal Water Legislation.

The Comprehensive Water System Plan was adopted by the City Council at a meeting on November 22nd, 2011, as documented in the enclosed meeting minutes. The approved code and ordinance will be included in Appendix N.

17. Please provide an Adoption Ordinance for your WSP from King County, if the City provides water service in unincorporated King County.

The City is in the process of obtaining approval from King County and will forward an Adoption Ordinance to the DOH as soon as it is obtained.

18. Please provide a signed SEPA Threshold determination with the final WSP.

A copy of the SEPA Determination of Non-Significance, signed 8/30/2011 is attached and will be included in Appendix F.

19. Please provide copies of any comments made by adjacent purveyors or other interested parties, along with the City's response to those comments.

All agency comments and responses that have been received are enclosed, which includes King County and Seattle Public Utilities.

We sincerely appreciate the time and effort you spent in reviewing and commenting on our plan submittal. We hope that our responses, actions and revisions satisfactorily address each of your comments. Please do not hesitate to contact us if you need any further clarification or information on any portion of our submittal. I can be reached by email at shaun.tozer@duvallwa.gov or by phone at 425-939-8046.

Regards,

Shaun Tozer
Project Manager

Enclosures:

- Updated Cover & Title Pages
- Figures
- Updated Executive Summary page 3 & 4
- Updated Chapter 5 page 3 & 4, Chapter 6 page 5 & 6, Chapter 7 page 11 & 12
- Updated Water Use Efficiency Appendix
- Cross Connection Control Plan
- November 22, 2011 Public Hearing Meeting Minutes
- SEPA Determination of Non-Significance
- King County Review Comments and City Responses
- SPU Review Comments and City Responses
- Duvall Standard Specifications for Water Distribution Main Projects
- Duvall Model Calibration Data
- Duvall Model Pressures
- Duvall Model Fire Flows
- Reports for Completed Distribution Main Projects

King County

Utilities Technical Review Committee
Department of Natural Resources and Parks
King Street Center
210 South Jackson Street, Suite 512
Seattle, WA 98104-3855
www.kingcounty.gov

RECEIVED
JAN 30 2012
CITY OF DUVALL

January 25, 2012

Shaun Tozer, Project Manager
City of Duvall
P. O. Box 1300
Duvall, WA 98019

Dear Mr. Tozer:

Thank you for submitting the City of Duvall Comprehensive Water System Plan (Plan) for King County approval. The Plan was received on December 2, 2011. In accordance King County Code (KCC) 13.24 the King County's Utilities Technical Review Committee (UTRC) has reviewed the Plan for consistency with the King County Comprehensive Plan and KCC.

In reviewing the Plan, the UTRC found that the Plan is largely consistent with the County's comprehensive plan and code. We have identified six points of clarification or additions that are necessary before we can make a recommendation to the King County Council for approval of the City's Plan. We request you include the following information:

- The service area map (Figure 2-3);
- Affirm that current King County zoning was considered for those portions of the current service area outside of the City;
- Clarify fire flow requirements for those portions of the current service area outside of the City in unincorporated King County; and, report any differences in flow requirements between those in the City and unincorporated King County;
- Clarify and/or provide the City's adopted service area policies as to what "timely and reasonable" service is and aspects of reasonable service considered by the City for service to unincorporated King County;
- Explain why a water service applicant outside of the City's urban growth area and within the City's future water service area would be required to sign a statement of intent to annex to the City. The County's perspective is that property outside the urban growth area cannot annex to the City and the City should not be asking rural property owners to sign an annexation agreement as a condition of water service; and
- A copy of the signed State Environmental Policy Act threshold decision by the lead agency on the adoption of the plan.

Often times the construction and/or maintenance of utility lines requires work within the road right-of-way for roads in unincorporated King County. When a utility has a proposed project within unincorporated King County, please contact the King County Department of

Transportation (KCDOT), Road Services Division, Traffic and Engineering Services Section for coordination with the County's annual overlay program. Failure to do so may result in the denial of the permit to work within the right-of-way once an overlay of the road section has been completed. Although each utility has a set of construction standards and specifications for their projects, when construction and or maintenance of utilities requires work within the road right-of-way for roads in unincorporated King County, please be aware that the current edition of the King County Road and Construction standards apply to any installation or work in these rights-of-way. Not adhering to these standards could result in the installation of non specified and approved methods and/or materials that are out of the specifications for King County, and could potentially add additional costs to the purveyor for future repairs or adversely affect acceptance of those repairs/installations. The KCDOT- 2007 King County Road Design and Construction Standards can be found on the World Wide Web at http://www.kingcounty.gov/transportation/kcdot/Roads/EngineeringServices/RoadStandards2007.aspx

We look forward to seeing the final Plan and working with you to secure the King County Council's approval. The Council's action represents King County's final action on the Plan and is the statement of consistency under RCW 43.20.260.

Finally, and somewhat related to the water plan, our understanding is that water franchise (number 13927) held by the City is in good standing and will expire September 5, 2025.

If you have any questions or concerns about any of the information in the letter, please do not hesitate to call me at 206-205-0817.

Sincerely,

Stephen Hirschey
Chair, Utilities Technical Review Committee

cc: Richard Rodriguez, Regional Planner, Washington State Department of Health

City of Duvall
Small Town. Real Life.

May 31, 2012

Stephen Hirschey
King County - Utilities Technical Review Committee
King Street Center, KCS-NR-0512
210 South Jackson Street, Suite 512
Seattle, WA 98104-3855

RE: Comprehensive Water System Plan – King County Review Comments

Dear Mr. Hirschey,

The City of Duvall received the Comprehensive Water System Plan comments prepared by King County in a letter dated January 25, 2012. We have prepared responses to address each of your comments. Please see the City's response following each comment below:

• The service area map (Figure 2-3);

Figure 2-3 is enclosed and should be included at the end of Chapter 2. Other figures that were inadvertently not included in the original submittal to King County are also enclosed.

• Affirm that current King County zoning was considered for those portions of the current service area outside of the City;

Current King County zoning was used for areas outside of the City. The population estimates shown in Table 3-1 represent the existing population within the City limits as well as future population growth within the City's UGA and reserve areas, which take into account current King County zoning.

• Clarify fire flow requirements for those portions of the current service area outside of the City in unincorporated King County; and, report any differences in flow requirements between those in the City and unincorporated King County;

The unincorporated areas within the City's service area outside of the city limits are zoned residential RA-5 and RA-10. The King County Fire Code 17.08.070 Minimum Water Flow Requirements references the 1974 Edition of the Insurance Service Office (ISO) Guide for Determination of Required Fire Flow and the minimum requirements specified in WAC 246-290 and 246-293. The minimum fire flow requirement specified in both the ISO guide and above referenced WAC is 500 gpm for residential classifications, which is less than the City of Duvall's minimum fire flow requirement of 1000 gpm for residential.

14525 Main Street NE • P.O. Box 1300 • Duvall, WA 98019 • (425) 788-3434 • Fax 788-0311
www.duvallwa.gov

• Clarify and/or provide the City's adopted service area policies as to what "timely and reasonable" service is and aspects of reasonable service considered by the City for service to unincorporated King County;

> *The City would typically consider one month as reasonable provided that all of the necessary improvements and/or water main extensions are previously installed by the applicant.*

• Explain why a water service applicant outside of the City's urban growth area and within the City's future water service area would be required to sign a statement of intent to annex to the City. The County's perspective is that property outside the urban growth area cannot annex to the City and the City should not be asking rural property owners to sign an annexation agreement as a condition of water service; and

> *The City has removed the statement of intent to annex requirement on page 5-3 for properties outside of our growth areas.*

• A copy of the signed State Environmental Policy Act threshold decision by the lead agency on the adoption of the plan.

> *A copy of the SEPA Determination of Non-Significance, signed 8/30/2011, is enclosed and should be included in Appendix F.*

We sincerely appreciate the time and effort you spent in reviewing and commenting on our plan submittal. We hope that our responses, actions and revisions satisfactorily address each of your comments. Please do not hesitate to contact us if you need any further clarification or information on any portion of our submittal. I can be reached by email at shaun.tozer@duvallwa.gov or by phone at 425-939-8046.

Regards,

Shaun Tozer
Project Manager

Enclosures:

- Updated Cover & Title Pages
- Figures
- Updated Executive Summary page 3 & 4
- Updated Chapter 5 page 3 & 4, Chapter 6 page 5 & 6, Chapter 7 page 11 & 12
- Updated Water Use Efficiency Appendix
- Cross Connection Control Plan
- November 22, 2011 Public Hearing Meeting Minutes
- SEPA Determination of Non-Significance
- DOH Review Comments and City Responses
- SPU Review Comments and City Responses

RECEIVED
JAN 30 2012
CITY OF DUVALL

City of Seattle
Seattle Public Utilities

January 25, 2012

Mr. Shaun Tozer
City of Duvall
P.O. Box 1300
Duvall, WA 98019

Subject: Comments to October 2011 City of Duvall Comprehensive Water System Plan

Dear Mr. Tozer,

Thank you for the opportunity to review and comment on the City of Duvall's updated Comprehensive Water System Plan Update (WSP). Our comments below include general comments and more specific comments to correct and update information presented in the WSP.

1. Figure 2-1, Existing Water System, was not included in the electronic files provided, and it is unclear what area was used for the demand forecast and if the ultimate service area shown is consistent with the new wholesale contract with SPU. (Most of the other figures were also not included.)
2. Page 3-4, Existing and Future Population: More documentation of the population estimate and forecast would be useful here. These numbers are the basis for the demand forecast in Chapter 4 and need some supporting documentation:
   a) How is the physical area served by Duvall expected to change over time?
   b) We understand that Duvall is entirely contained in Census Tracts 324.01 and 324.02 (FAZ 6605). Their combined 2010 population according to PSRC is 11,809. If Duvall's current population is 6,695, it currently serves 57% of the population in 20 to 25% of the area in these census tracts. The 2030 forecast of 11,386 implies Duvall will absorb 89% of all the growth in those tracts, and that WD 119 which covers over half of the land area in these census tracts would get no more than 10% of the growth. The 14,777 population figure (Table 4-11) is 2800 higher than what PSRC projects would be the population if 100% of the growth in CTs 324.01 and 324.02 went to Duvall. What is the basis for the assumptions used?
3. Table 4-1, Average Annual Metered Consumption and Service Connections, and Table 4-6, Metered Supply and Consumption Comparison: Data in these tables are at odds with what was reported to SPU by Duvall in the Wholesale Customers Survey, and we would like clarification so that our survey is accurate. On Forms 1 and 2 for 2009, Duvall reported having sold 179,424,256 gallons retail (plus 305,184 gallons wholesale). This implies non-revenue water of 9,904,268 gallons or 5.2%, not the 9.4% shown in Table 4-6. Other years do not always match exactly with what was reported to SPU but are

Ray Hoffman, Director
Seattle Public Utilities
700 5th Avenue, Suite 4900
PO Box 34018
Seattle, WA 98124-4018

Tel (206) 684-5851
Fax (206) 684-4631
TDD (206) 233-7241
ray.hoffman@seattle.gov

An equal employment opportunity, affirmative action employer. Accommodations for people with disabilities provided on request.

close. Also, there is a discrepancy between the total retail consumption reported in Table 4-1 for 2009 and what Duvall reported to SPU in the Wholesale Customer survey. Form 2 matches for all customer classes except Gov/Education which has 16,352,776 gallons rather than the 8,738,884 shown here.

4. On page 6-6, under the "Source Treatment" paragraph, the second sentence implies there is filtration for the Cedar supply, which is not true.

5. Comments on the regional conservation program and WUE Goal:

   a. Goal Setting and WUE Program (pg ES-3, Appendix G-3 and elsewhere):
   The 2007-2012 Water Use Efficiency Goal adopted through SPU's Water System Plan for the Saving Water Partnership consists of the last four years of the 2000-2010 regional 1% Program and the first two years of the 2011-2030 Regional Conservation Program, which may include public education to promote behavioral changes, customer incentives for installing water-efficient equipment, and price induced water savings from rates as detailed in the 2007 WSP. The latter program is not expected to equate to decreases in annual per capita consumption of 1% per year for the Partnership as a whole. The 2013-2018 WUE Goal for SPU and for adoption by members of the Partnership will be determined in SPU's upcoming 2013 WSP. If Duvall intends on achieving a 1% per year reduction in per capita consumption, then Duvall's current draft WSP should clarify how it will augment the regional program to achieve that goal, or state, where and if appropriate, that the reduction is an assumption used for the demand forecast. Also, it is not clear whether Duvall's 1% per year reduction will be on a per capita basis or total water use (see ES-3).

   b. Appendix G WUE Program, pg. 1
   Regional Water Use Efficiency Planning
   Clarify that Seattle Public Utilities administers the regional water conservation program on behalf of the Saving Water Partnership, which is made up of utilities (including the City of Duvall) that purchase wholesale water from Seattle Public Utilities.

   The Partnership for Water Conservation includes businesses and environmental groups as well as the groups listed. This is a notable part of what makes them a unique organization. The Saving Water Partnership is a member of the Partnership for Water Conservation.

   Appliance rebates have mostly ended. We suggest the following change: "The Saving Water Partnership encourages customers to conserve water through public education materials~~, education~~ <u>and</u> programs, and ~~rebate programs for~~ <u>by</u> using resource efficient appliances<u>, fixtures and equipment</u>."

   c. Appendix G WUE Program, pg. 2
   Previous Water Use Efficiency Efforts
   Clarify that the 1% Program was in effect from 2000-2010. A name has not been selected for the current program.

Water Use Efficiency Program Goals and Objectives
First bullet needs correction. One% per year through the year 2014 is *not* consistent with SPU's regional water use efficiency goals.

d. Appendix G WUE Program, pg. 7, TABLE: Summary of WUE Measures

Utility Financed Retrofit: Delete washing machines. Below is the current list of equipment rebates:

Residential toilet rebates	• Single Family and Multi-Family Toilet Rebates
Irrigation rebates	• Evapotranspiration Irrigation Controllers • Pressure Regulating & Efficient Spray Heads • Rain Sensors • Drip Irrigation and Micro Sprays • Seasonal Adjust (Percentage) controllers • Irrigation System Leak Monitoring Alarms
Business rebates and technical assistance	• Financial incentives of up to 50% of total customer cost for plumbing Fixture (toilets, urinals, showerheads, aerators, etc. • Cooling and Process Water Rebates • Food Service Equipment Rebates/Incentives • Medical and Lab Equipment Rebates • Efficient Laundry Incentives • Large Customer Technical Assessments and Outreach using Resource Venture • Incentive Partnerships with Energy Utilities • Steam Condensate Recovery • End-Use Metering and Monitoring • At location Treatment, Recycling, and Reuse • Custom Rebates for Specialized Equipment Evaluation of Reclaimed Water Opportunities

Seasonal Demand Management: It appears that the 1% savings noted here is due to the assumption of an ongoing regional 1% program, and that there is expected to be a 1% reduction of both average annual and peak season usage. See previous comments about the ending of the regional 1% program in 2010.

If you have any questions on our comments, please contact me at 206-684-0839 or joan.kersnar@seattle.gov.

Sincerely,

Joan M. Kersnar

Joan M. Kersnar, P.E.
Drinking Water Planning Manager

cc: Terri Gregg, Wholesale Contracts Manager, Seattle Public Utilities

City of Duvall
Small Town. Real Life.

May 31, 2012

Ms. Joan Kersnar, P.E.
Seattle Public Utilities
700 5th Avenue, Suite 4900
PO Box 34018
Seattle, WA 98124-4018

RE: Comprehensive Water System Plan – SPU Review Comments

Dear Ms. Kersnar,

The City of Duvall received the Comprehensive Water System Plan comments prepared by Seattle Public Utilities in a letter dated January 25, 2012. We have prepared responses to address each of your comments. Please see the City's response following each comment below:

1. Figure 2-1, Existing Water System, was not included in the electronic files provided, and it is unclear what area was used for the demand forecast and if the ultimate service area shown is consistent with the new wholesale contract with SPU. (Most of the other figures were also not included.)

> *Figure 2-3 is enclosed and should be included at the end of Chapter 2. Other figures that were inadvertently not included in the original submittal to SPU are also enclosed.*

2. Page 3-4, Existing and Future Population: More documentation of the population estimate and forecast would be useful here. These numbers are the basis for the demand forecast in Chapter 4 and need some supporting documentation:

a) How is the physical area served by Duvall expected to change over time?

> *The City does not anticipate growing significantly in area; however we do anticipate seeing our population steadily increase as shown in Table 3-1 through development of vacant, buildable properties within our service area. The unincorporated area immediately outside of the City limits but within the future service area is not expected to see any significant change in population due to the zoning designation and development restrictions of the area.*

b) We understand that Duvall is entirely contained in Census Tracts 324.01 and 324.02 (FAZ 6605). Their combined 2010 population according to PSRC is 11,809. If Duvall's current population is 6,695, it currently serves 57% of the population in 20 to 25% of the area in these census tracts. The 2030 forecast of 11,386 implies Duvall will absorb 89% of all the growth in those tracts, and that WD 119 which covers over half of the land area in these census tracts would get no more than 10% of the growth. The 14,777 population figure (Table 4-11) is 2800 higher than what PSRC projects would be the population if 100% of the growth in CTs 324.01 and 324.02 went to Duvall. What is the basis for the assumptions used?

> *The population forecast largely represents the anticipated growth within the City limits, UGA, and Urban Reserve as evaluated by City Staff and summarized in our November 25, 2008 memo*

titled "Housing and TAZ Capacity Analysis Study". The growth rate within the City is higher than the PSRC forecasts based on the results of our evaluation and supported by the higher than anticipated Census 2010 results. The City does not anticipate absorbing growth from outside of the UGA but instead anticipates a higher growth rate than that assumed by PSRC.

3. Table 4-1, Average Annual Metered Consumption and Service Connections, and Table 4-6, Metered Supply and Consumption Comparison: Data in these tables are at odds with what was reported to SPU by Duvall in the Wholesale Customers Survey, and we would like clarification so that our survey is accurate. On Forms 1 and 2 for 2009, Duvall reported having sold 179,424,256 gallons retail (plus 305,184 gallons wholesale). This implies non-revenue water of 9,904,268 gallons or 5.2%, not the 9.4% shown in Table 4-6. Other years do not always match exactly with what was reported to SPU but are close. Also, there is a discrepancy between the total retail consumption reported in Table 4-1 for 2009 and what Duvall reported to SPU in the Wholesale Customer survey Form 2 matches for all customer classes except Gov/Education which has 16,352,776 gallons rather than the 8,738,884 shown here.

The City has spent a significant amount of time reviewing and evaluating supply and consumption data during preparation of this plan, which represents more accurate data than that reported to SPU as a result of the findings. For example, corrections were made in 2008 for the Commercial / Industrial consumption in August, which was listed in the SPU report as 17,655 ccf and should have read 2,675 ccf. Similarly for August of 2009 in the Government / Education column the total was listed as 11,309 when it should have been 1,130. Both of these affected the totals and calculated percentages reported to SPU. We believe this plan presents the most accurate information available.

4. On page 6-6, under the Source Treatment" paragraph, the second sentence implies there is filtration for the Cedar supply, which is not true.

The reference on page 6-6 has been removed.

5. Comments on the regional conservation program and WUE Goal:

a. Goal Setting and WUE Program (pg ES-3, Appendix G-3 and elsewhere):
The 2007-2012 Water Use Efficiency Goal adopted through SPU's Water System Plan for the Saving Water Partnership consists of the last four years of the 2000- 2010 regional 1% Program and the first two years of the 2011-2030 Regional Conservation Program, which may include public education to promote behavioral changes, customer incentives for installing water-efficient equipment, and price induced water savings from rates as detailed in the 2007 WSP. The latter program is not expected to equate to decreases in annual per capita consumption of 1% per year for the Partnership as a whole. The 2013-2018 WUE Goal for SPU and for adoption by members of the Partnership will be determined in SPU's upcoming 2013 WSP. If Duvall intends on achieving a 1% per year reduction in per capita consumption, then Duvall's current draft WSP should clarify how it will augment the regional program to achieve that goal, or state, where and if appropriate, that the reduction is an assumption used for the demand forecast. Also, it is not clear whether Duvall's 1% per year reduction will be on a per capita basis or total water use (see ES-3).

We have revised the text on page ES-3 and throughout the Water Use Efficiency Program document to clarify SPU's program and the intent of the City's program.

b. Appendix G WUE Program, pg. 1
Regional Water Use Efficiency Planning
Clarify that Seattle Public Utilities administers the regional water conservation program on behalf of the Saving Water Partnership, which is made up of utilities (including the City of Duvall) that purchase wholesale water from Seattle Public Utilities.

The Partnership for Water Conservation includes businesses and environmental groups as well as the groups listed. This is a notable part of what makes them a unique organization. The Saving Water Partnership is a member of the Partnership for Water Conservation.

Appliance rebates have mostly ended. We suggest the following change: "The Saving Water Partnership encourages customers to conserve water through public education materials ~~education~~ and programs, and ~~rebate programs for~~ by using resource efficient appliances, fixtures and equipment."

We have revised text in the Water Use Efficiency Program document to be more consistent with what is stated above.

c. Appendix G WUE Program, pg. 2
Previous Water Use Efficiency Efforts
Clarify that the 1% Program was in effect from 2000-2010. A name has not been selected for the current program.

We revised the text in this section to reflect that the program was in effect from 2000-2010.

Water Use Efficiency Program Goals and Objectives
First bullet needs correction. One% per year through the year 2014 is *not* consistent with SPU's regional water use efficiency goals.

We have revised the text in this section.

d. Appendix G WUE Program, pg. 7, TABLE: Summary of WUE Measures

Utility Financed Retrofit: Delete washing machines. Below is the current list of equipment rebates (*table provided by SPU*):

This section has been revised and updated.

Seasonal Demand Management: It appears that the 1% savings noted here is due to the assumption of an ongoing regional *1%* program, and that there is expected to be a 1% reduction of both average annual and peak season usage. See previous comments about the ending of the regional 1% program in 2010.

This section has been revised.

We sincerely appreciate the time and effort you spent in reviewing and commenting on our plan submittal. We hope that our responses, actions and revisions satisfactorily address each of your comments. Please do not hesitate to contact us if you need any further clarification or information on any portion of our submittal. I can be reached by email at shaun.tozer@duvallwa.gov or by phone at 425-939-8046.

Regards,

Shaun Tozer
Project Manager

Enclosures:

- Updated Cover & Title Pages
- Figures
- Updated Executive Summary page 3 & 4
- Updated Chapter 5 page 3 & 4, Chapter 6 page 5 & 6, Chapter 7 page 11 & 12
- Updated Water Use Efficiency Appendix
- Cross Connection Control Plan
- November 22, 2011 Public Hearing Meeting Minutes
- SEPA Determination of Non-Significance
- DOH Review Comments and City Responses
- King County Review Comments and City Responses